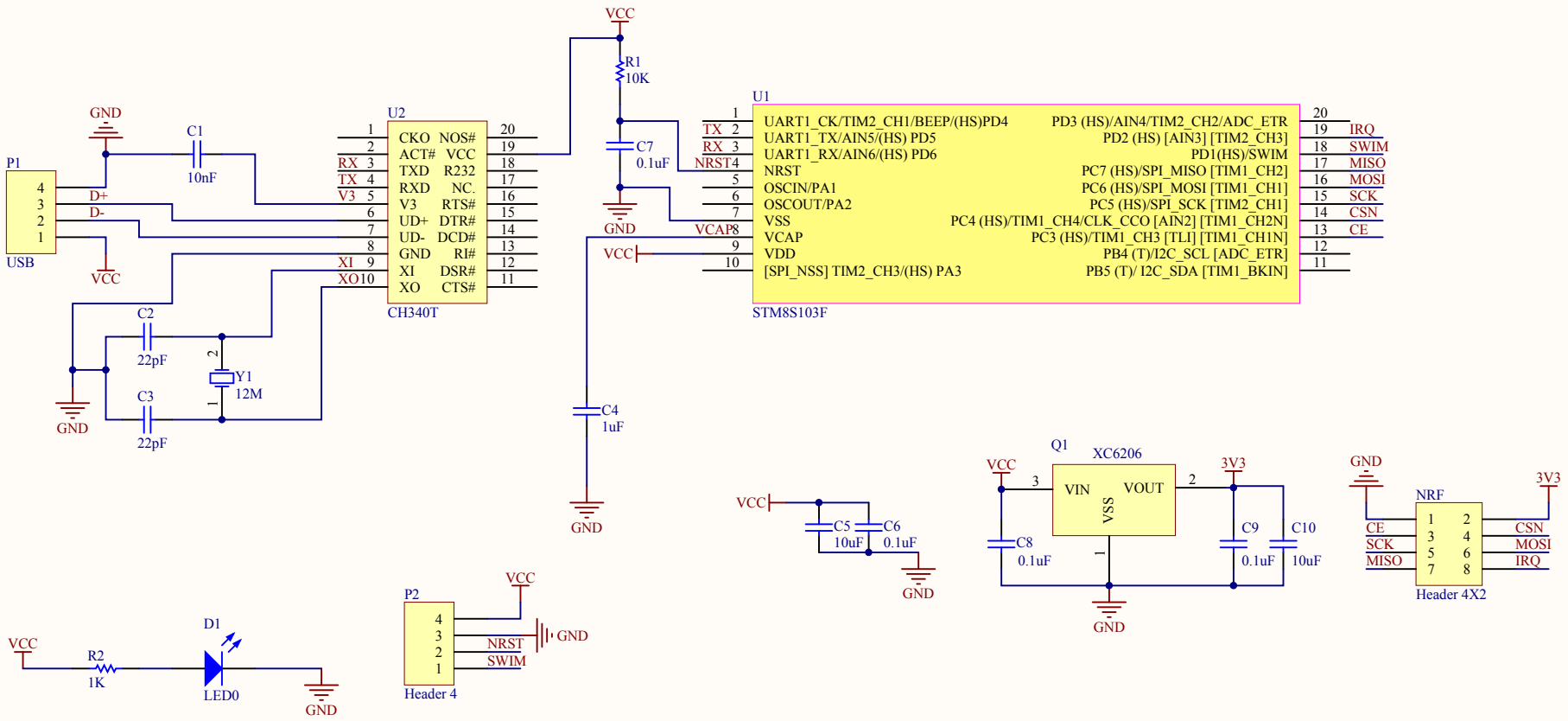

Title NRF24L01-TTL		
Size A4	Number	Revision CSB
Date: 2016/8/19		Sheet of
File: C:\Users\..\NRF24L01-TTL_V2.SchDoc		Drawn By: sunxiao

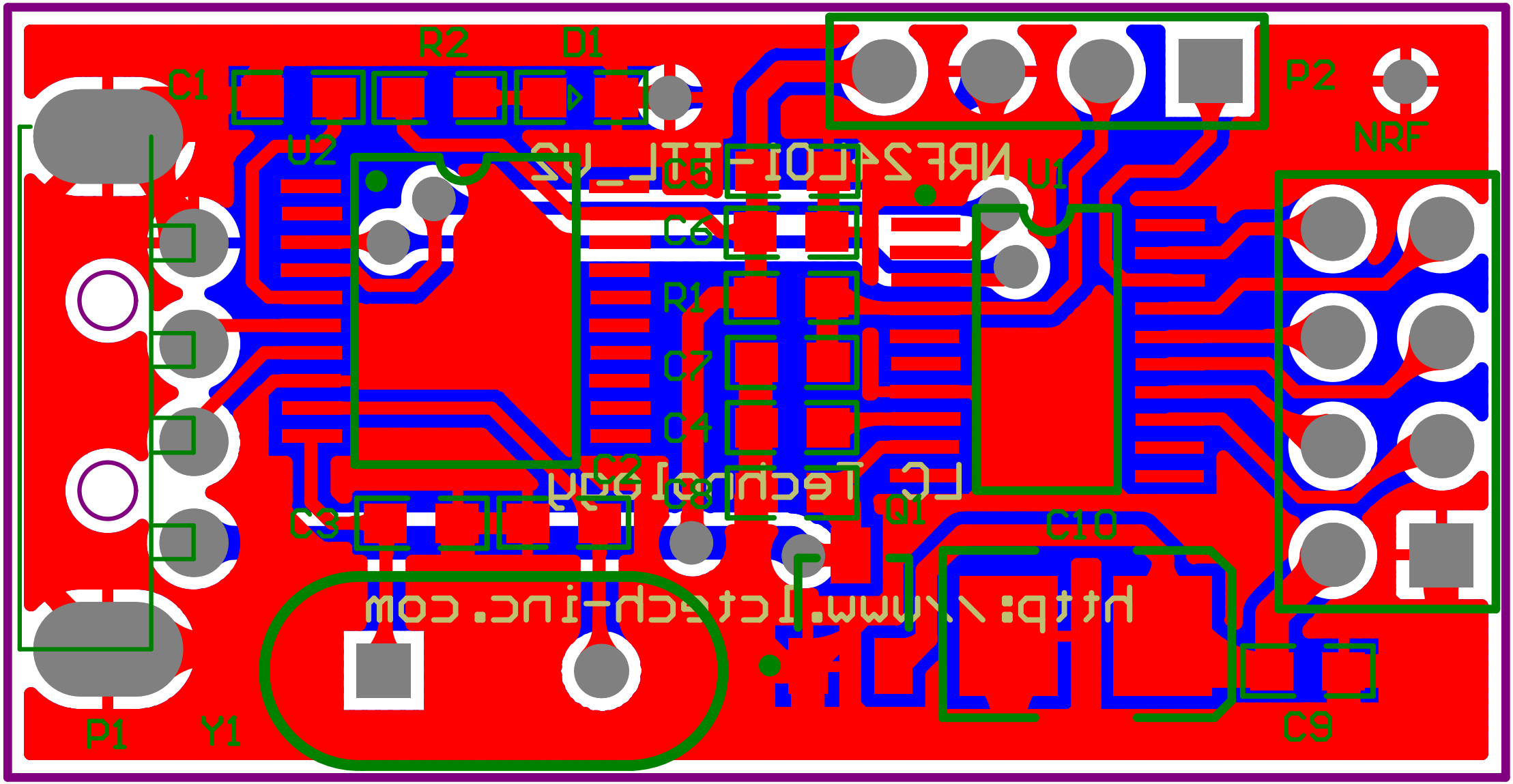
R2
D1
C1
U2
C5
C6
R1
C7
C4
C2
C3
Q1
C10
P2
NRF
U1
P1
Y1
C9