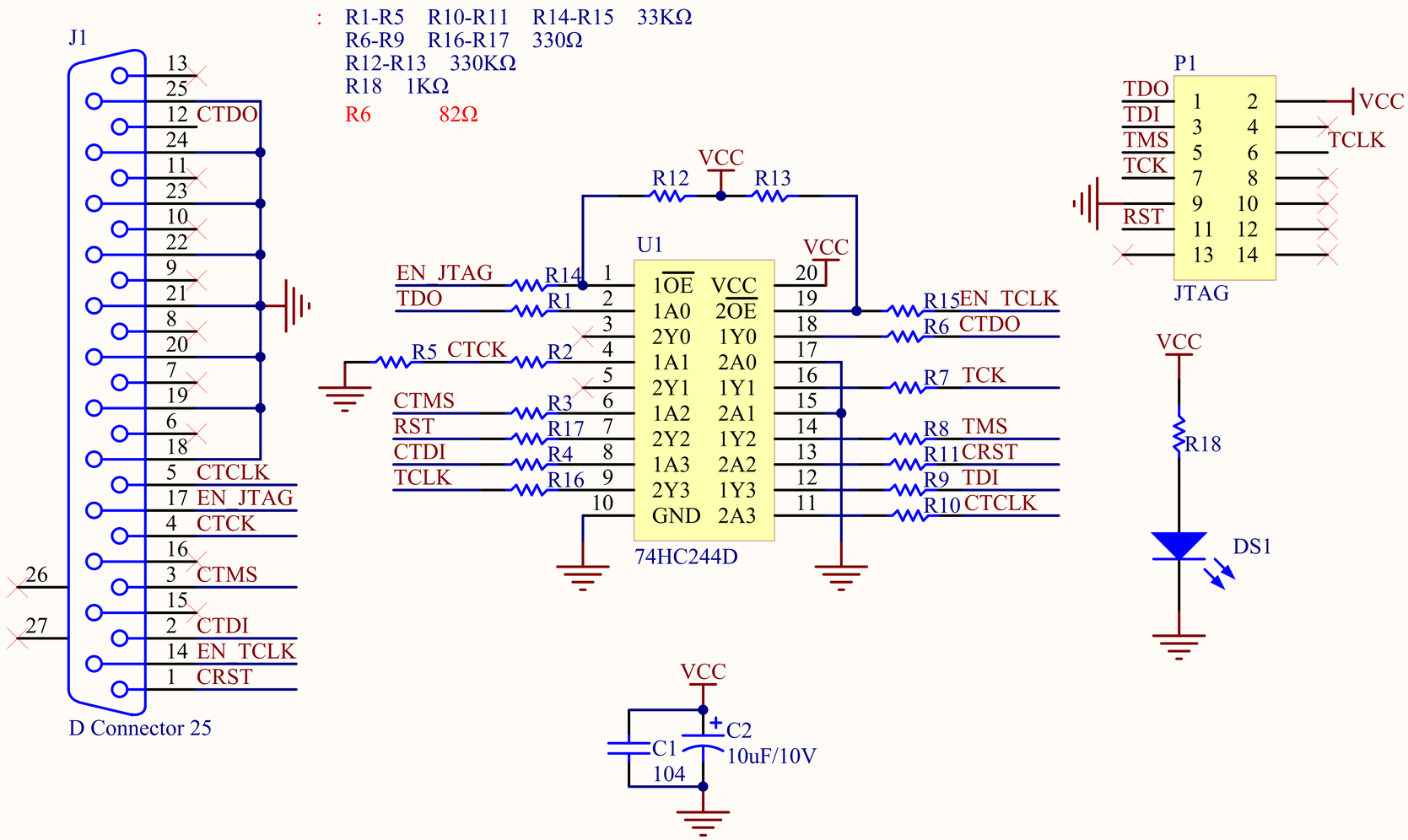

Title	MSP430并口JTAG仿真器	
Size Orcad E	Number http://lcsoft.taobao.com	Revision \
Date: 2010/6/11		Sheet of
File: E:\Temp\MSP430_JTAG2.SCHDOC		Drawn By: \