p:/

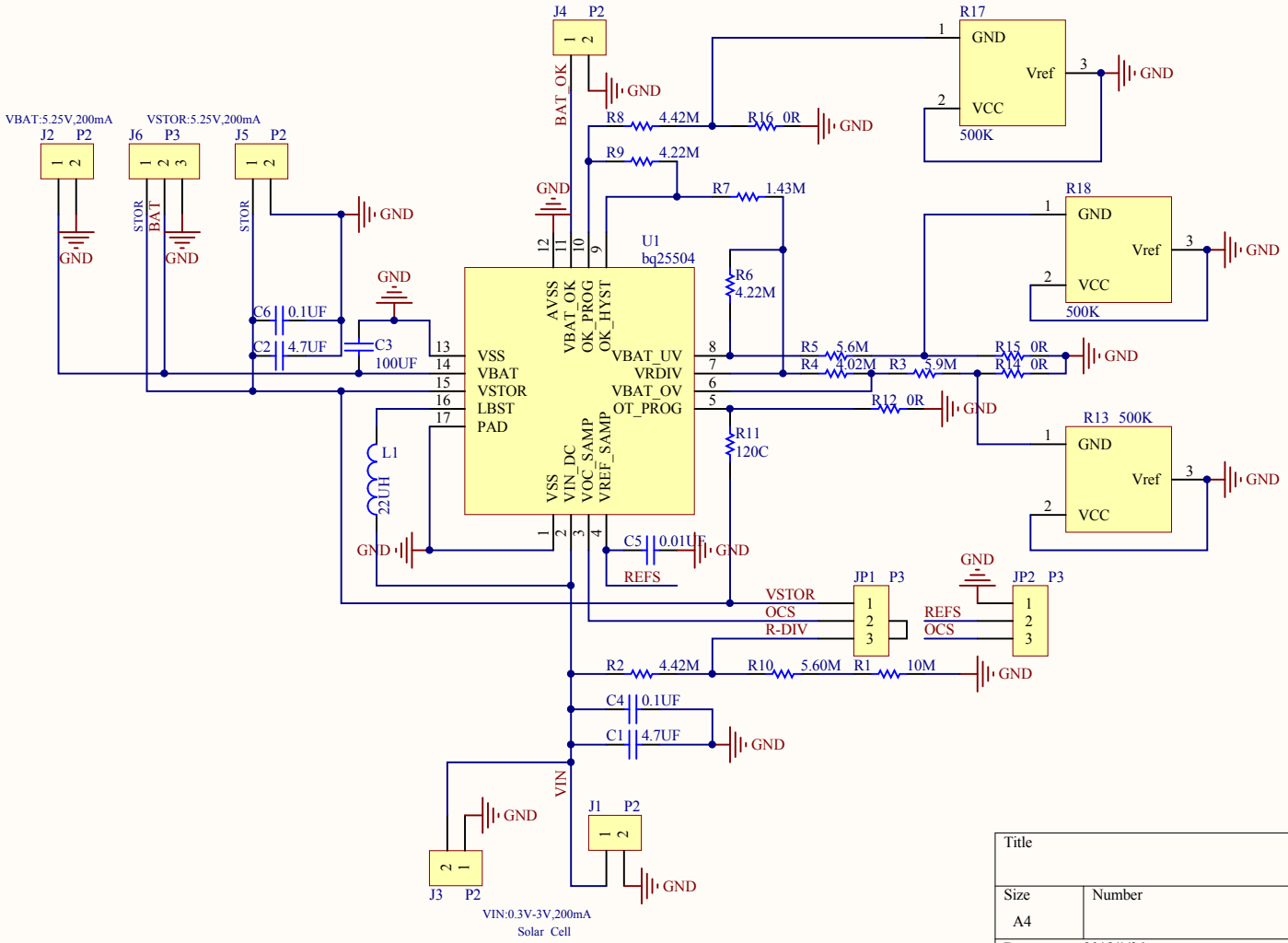

Title		
Size A4	Number	Revision
Date: 2018/1/26		Sheet of
File: H:\ \..\CJMCU-25504.SchDoc		Drawn By: