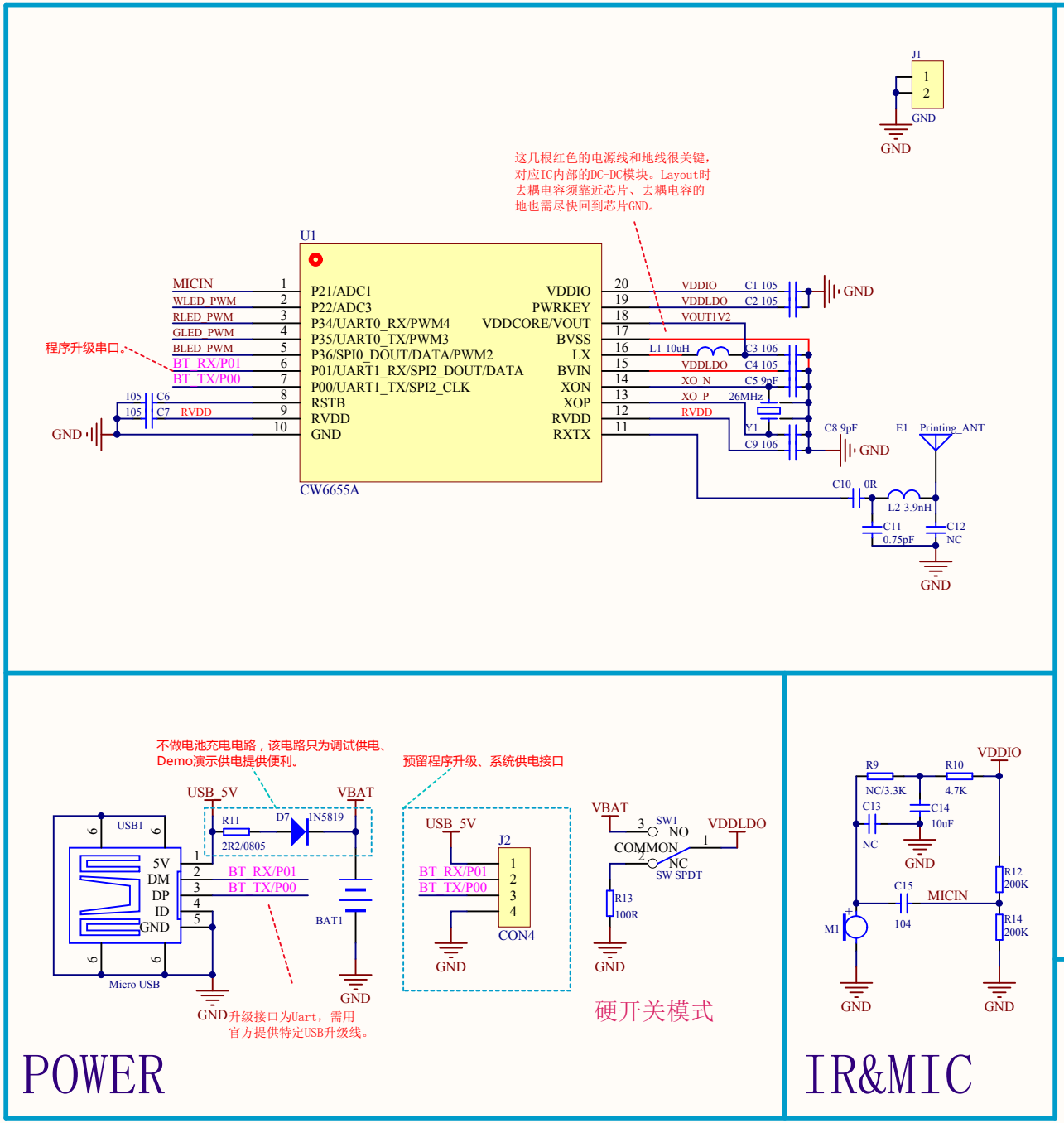

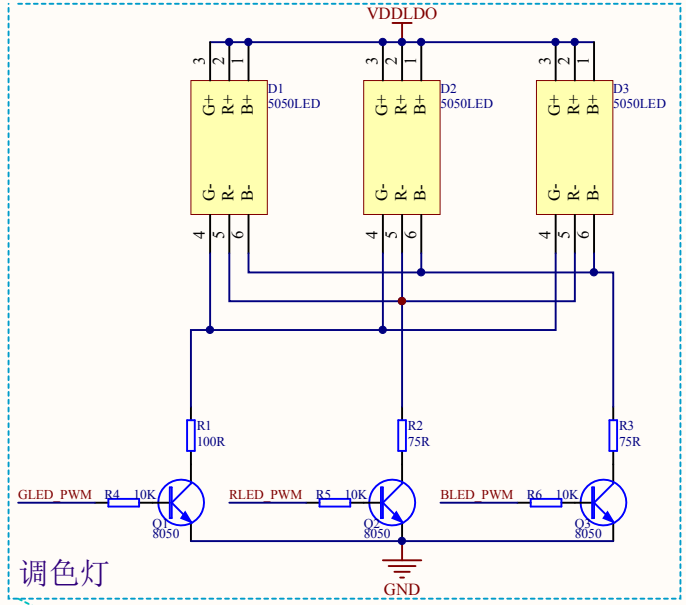

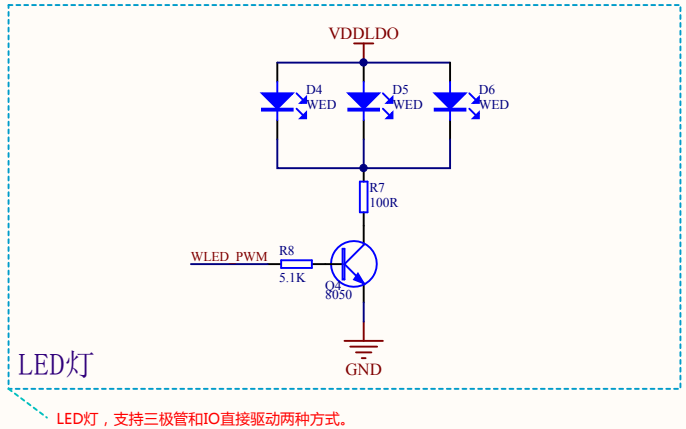

LED_Ctr

POWER

IR&MIC

Buildwin 建荣科技 Member of AppoTech Group	BUILDWIN INTERNATIONAL(ZHUHAI) LIMITED		
	Project: CW6655A SSOP20 BLE Demo V1.2		
	Drawn by: guizhuan	SCH. NO.:	Version: V1.2
	Checked by: guizhuan	PCB. NO.:	Sheet:
	Approved by:	Date: 2015.11.17	Size: