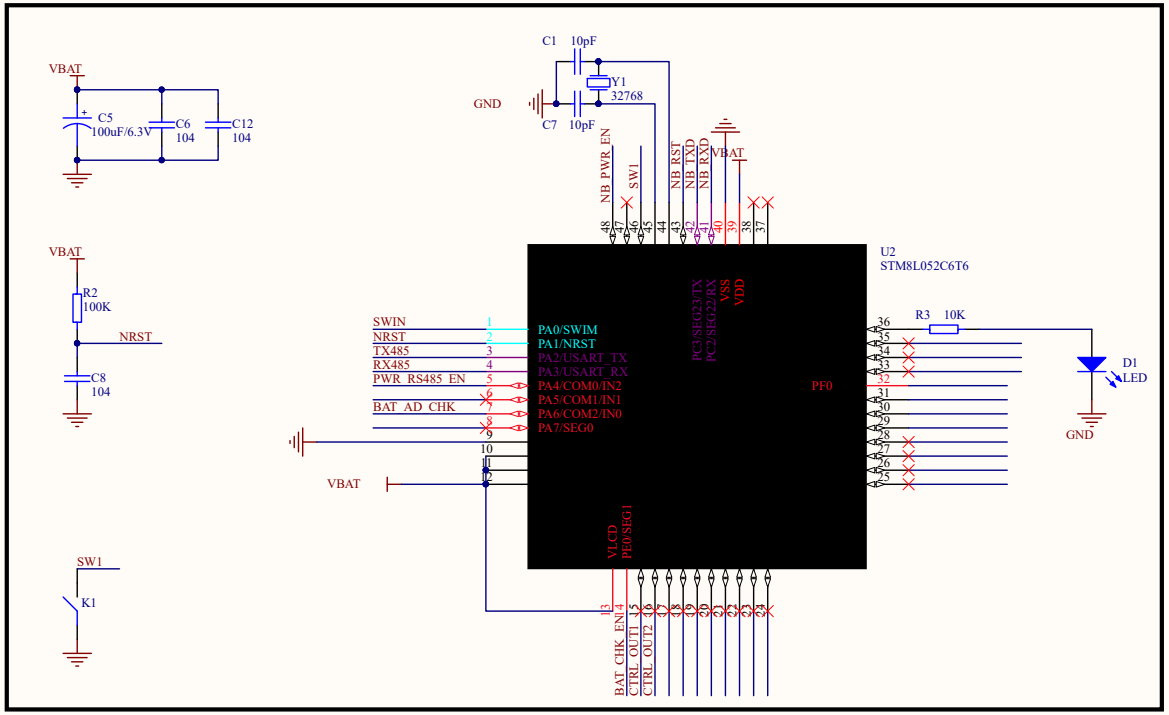

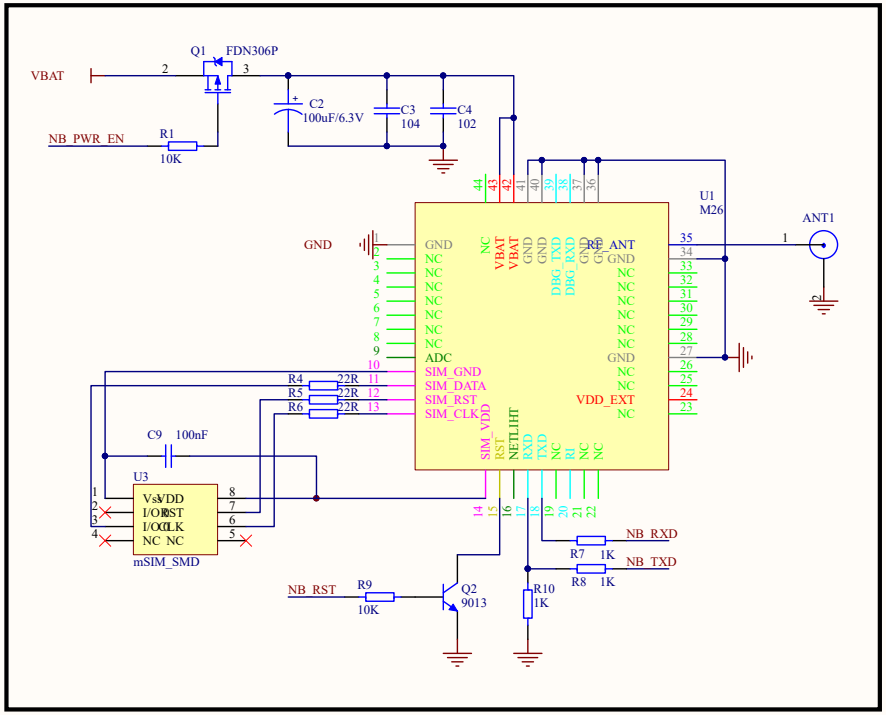

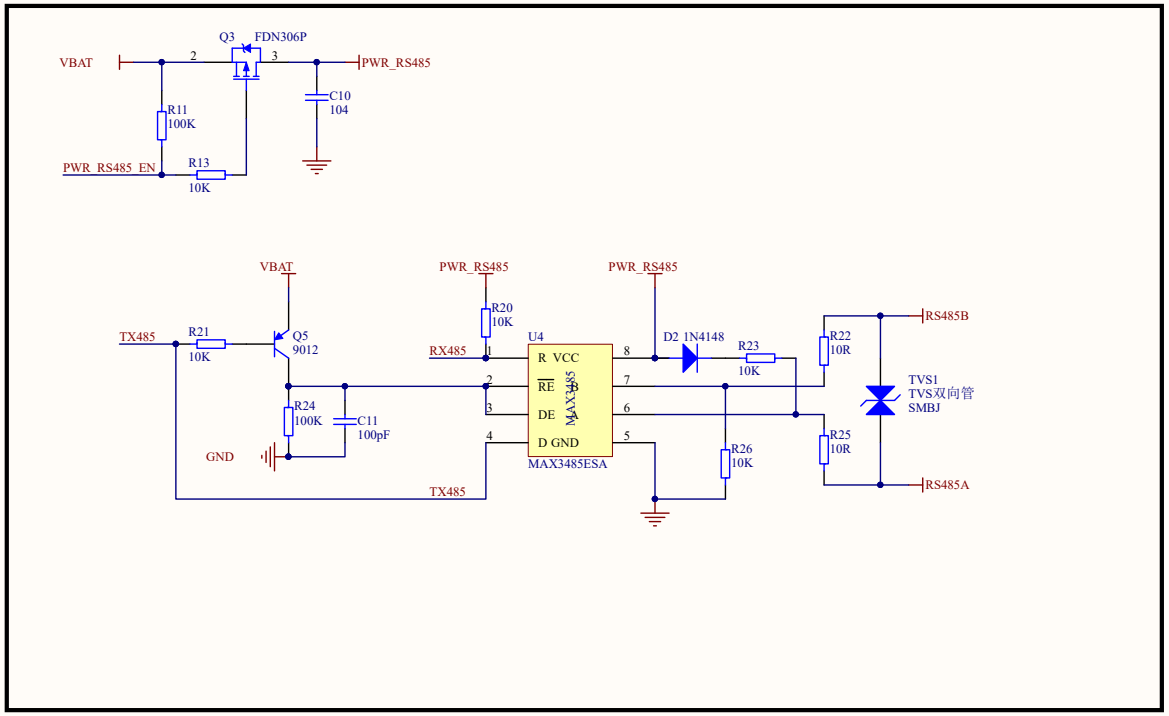

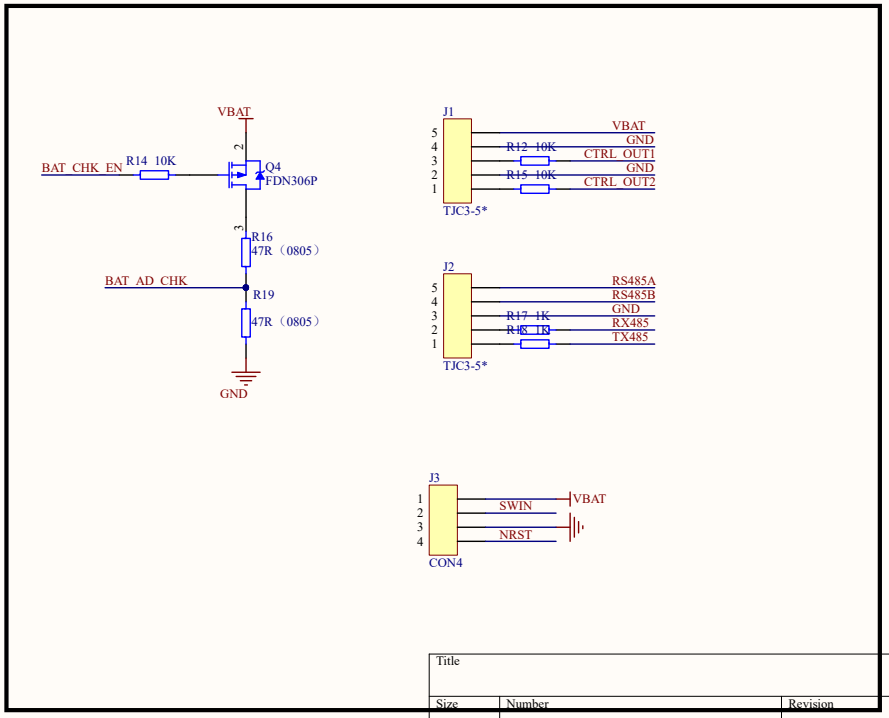

Title		
Size	Number	Revision
A3		
Date: 2018/5/5		Sheet of
File: D:\OneDrive\...\Sheet1.SchDoc		Drawn By: