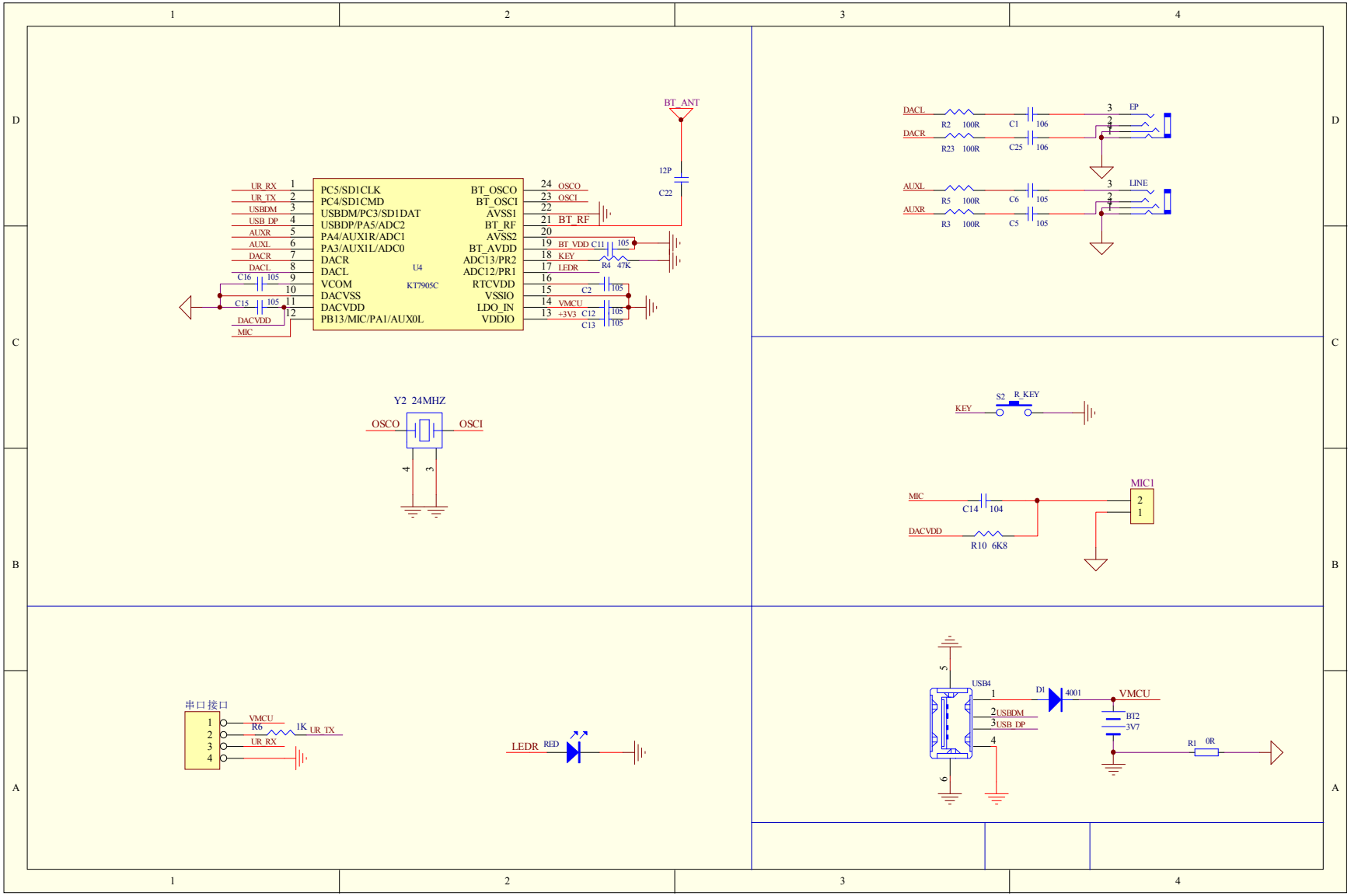
U4
KT7905C
PC5/SD1CLK
PC4/SD1CMD
USBDM/PC3/SD1DAT
USBDP/PA5/ADC2
PA4/AUX1R/ADC1
PA3/AUX1L/ADC0
DACR
DACL
VCOM
DACVSS
DACVDD
PB13/MIC/PA1/AUX0L
BT_OSCO
BT_OSCI
AVSS1
BT_RF
AVSS2
BT_AVDD
ADC13/PR2
ADC12/PR1
RTCVDD
VSSIO
LDO_IN
VDDIO
UR_RX
UR_TX
USBDM
USB_DP
AUXR
AUXL
DACR
DACL
DACVDD
MIC
OSCO
OSCI
BT_RF
BT_VDD
KEY
LEDR
VMCU
+3V3
BT_ANT
12P
C22
C11 105
R4 47K
C2 105
C12 105
C13 105
C16 105
C15 105
Y2 24MHZ
DACL
DACR
R2 100R
R23 100R
C1 106
C25 106
EP
AUXL
AUXR
R5 100R
R3 100R
C6 105
C5 105
LINE
S2 R_KEY
MIC
C14 104
DACVDD
R10 6K8
MIC1
串口接口
VMCU
R6 1K
UR_TX
UR_RX
LEDR RED
USB4
USBDM
USB_DP
D1 4001
VMCU
BT2 3V7
R1 0R