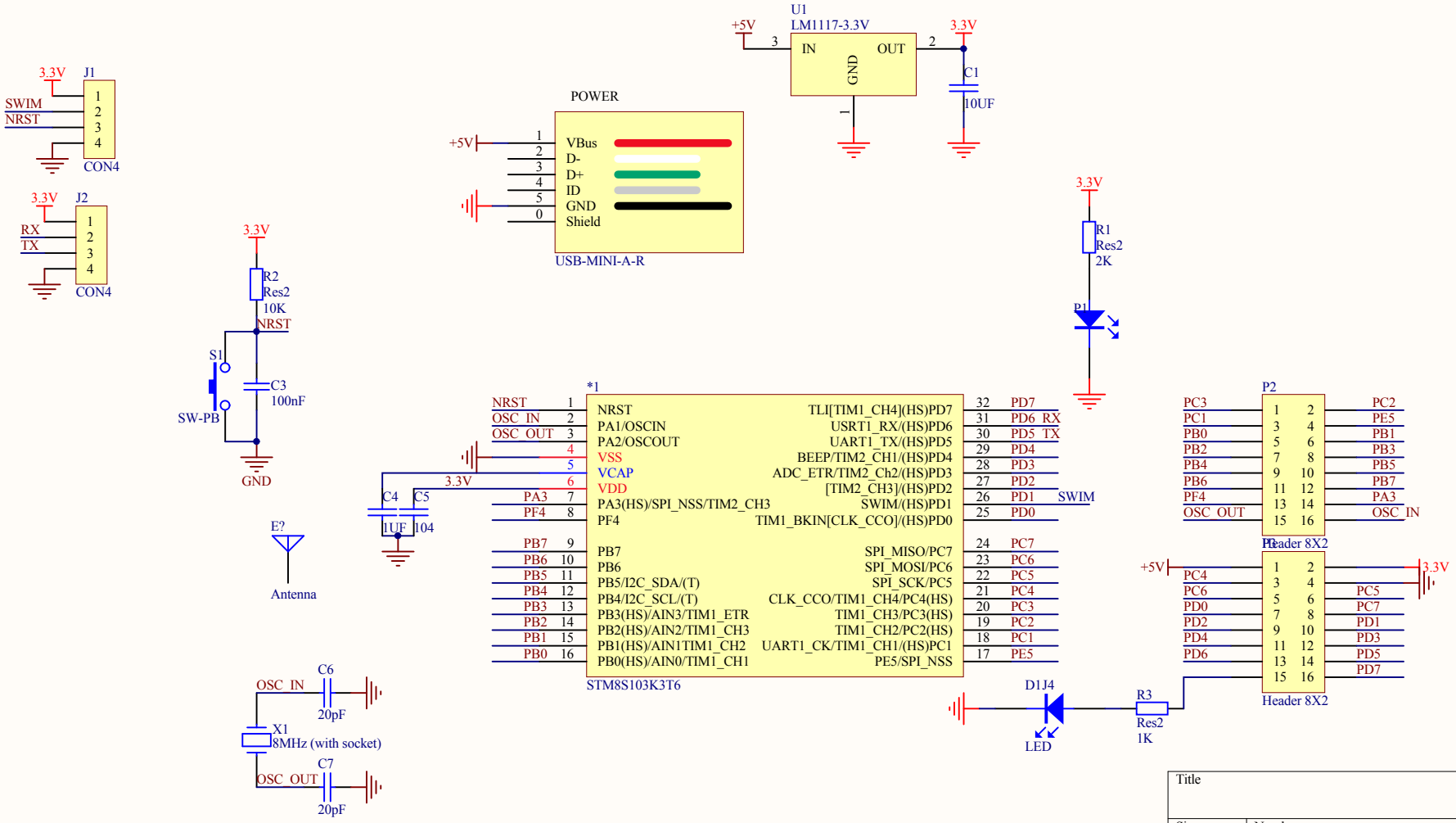

Title		
Size A4	Number	Revision
Date: 2015-7-10		Sheet of
File: Z:\1. \..\STM8S103K3T6.SchDoc		Drawn by:

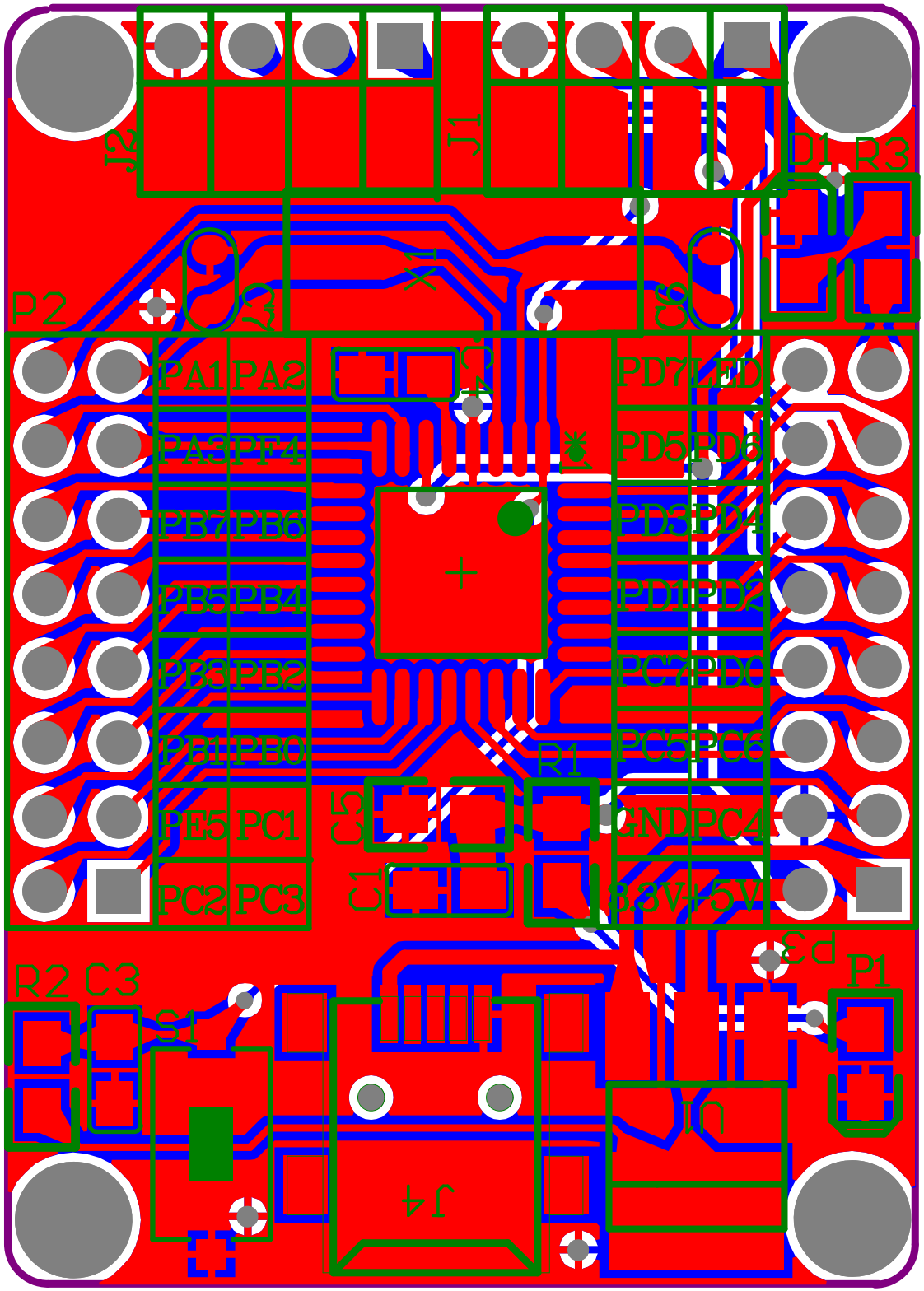
J2
J1
D1
R3
P2
PA1 PA2
PA3 PA4
PB7 PB6
PB5 PB4
PB3 PB2
PB1 PB0
PE5 PC1
PC2 PC3
PD7 LED
PD5 PD6
PD3 PD4
PD1 PD2
PC0 PD0
PC5 PC6
GND PC4
3.3V +5V
R1
R2 C3
S1
P1
J4

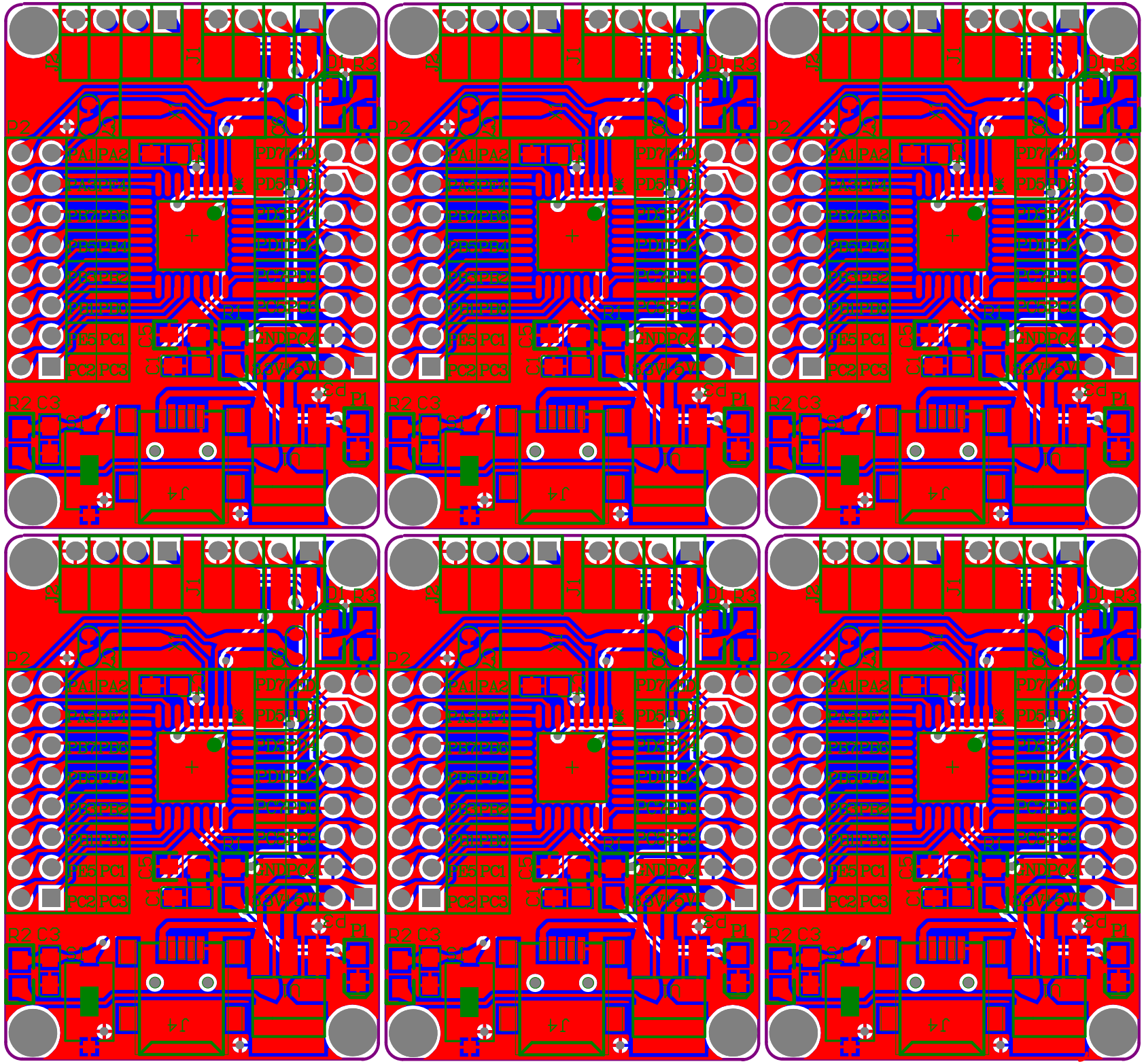
P2
PA1 PA2
PD7 PD
PD6 PD
PC2 PC3
R2 C3
P1
J1
J4