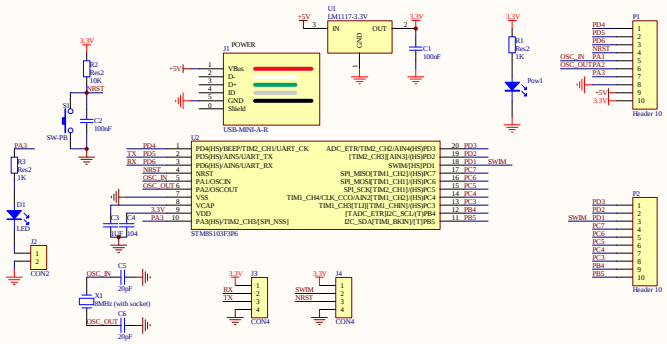

Title		
Size C	Number	Revision
Date: 29-Nov-2014	Sheet of	
File: C:\Documents and Settings\m-nwf\桌面\STM8s-B.PCB		