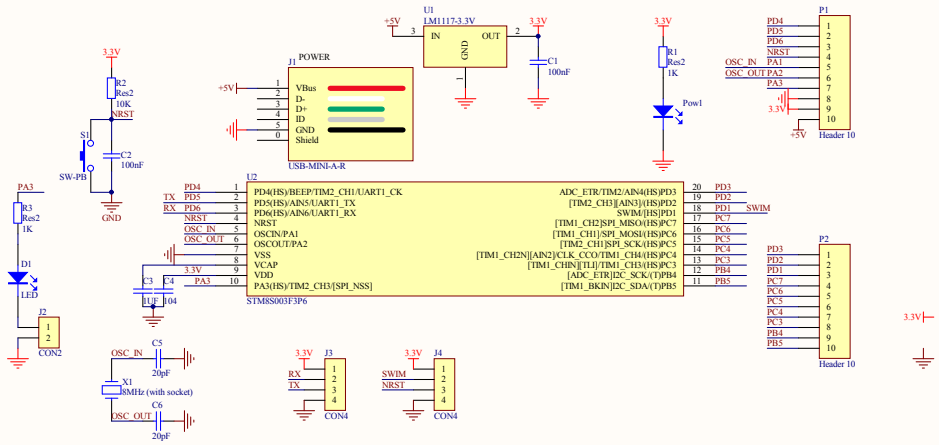

Title		
Size C	Number	Revision
Date: 2015-11-30	Sheet of	
File: Z:\1	\\stm8s003F3P6.SchDoc	Drawn By: