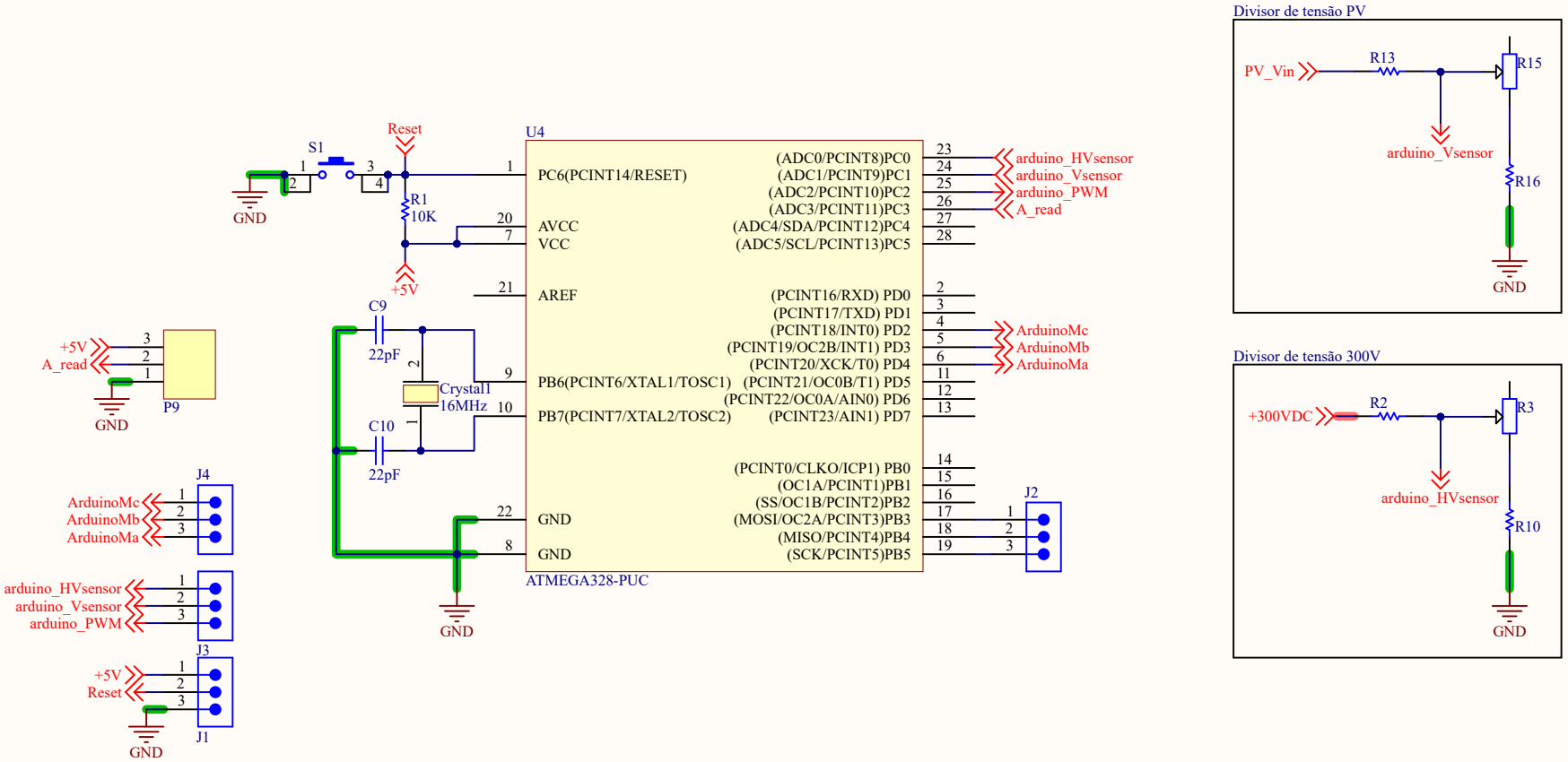

Title		
Size A4	Number	Revision
Date: 5/03/2023		Sheet of
File: Arduino.SchDoc		Drawn By: