PWMUSFQ Tapeout Report

Mock tapeout report adapted for the PWMUSFQ project

Project overview. PWMUSFQ integrates a 555-based timing block with a PWM generator driven by a 3-bit flash ADC. The input voltage vin is quantized to a 3-bit digital word and compared against a 3-bit counter, producing a PWM output whose duty cycle follows the analog input level.

1 Macro Information

GitHub Repo: https://github.com/EduHolg/PWMUSFQ

Project description: PWMUSFQ is a mixed-signal PWM macro composed of a 555-inspired analog block and a PWM generator based on flash conversion and binary comparison.

Estimated core area: TBD in the final integrated layout.

1.1 Top-Level Pin Information

Table 1 summarizes the complete chip-level pin set of PWMUSFQ. The VDD, VSS, and vbias nets are shared between the 555-based block and the flash-ADC / PWM-generator section.

Pin Name	Type	Direction	Description
VDD	Power	Input	Shared supply voltage for the complete chip, including both the 555-based block and the flash-ADC / PWM-generator section.
VSS	Ground	Input	Shared ground reference for the complete chip.
vbias	Analog bias	Input	Shared bias/reference node used by OPAMPs
vin	Analog	Input	Analog input voltage in the 0 V to 1 V range that is converted into a 3-bit code for duty-cycle control.
clk	Digital	Input	Clock input that drives the 3-bit counter used by the PWM generator.
PWM	Digital	Output	Top-level PWM output generated by comparing the counter value against the flash-ADC code.
CONTROL	Analog	Input	Control pin of the 555-based block.
RESET	Digital/Control	Input	Reset pin of the 555-based block.
THRESHOLD	Analog	Input	Threshold sensing input of the 555-based block.
TRIGGER	Analog	Input	Trigger input of the 555-based block.
DISCHARGE	Analog/Digital	Output	Discharge-related output node of the 555-based block.
OUTPUT	Digital	Output	Direct output node of the internal 555-based block.

1.2 Operating Principle

- For vin near 0 V, the flash ADC produces a low digital code, so the comparator is high for only a small fraction of the counter cycle. This results in a low-duty-cycle PWM output.
- For intermediate vin values, the ADC code increases and the PWM duty cycle increases proportionally in discrete 3-bit steps.
- For vin close to 1 V, the ADC output code is high, so the PWM output stays high for most of the counter period, producing a large duty cycle.

2 Implementation Steps

Step 1: Schematic

The top-level schematic combines the 555-based section with the flash-ADC, 3-bit counter, and 3-bit comparator. The structure shown in Figure 1 is the reference schematic for PWMUSFQ.

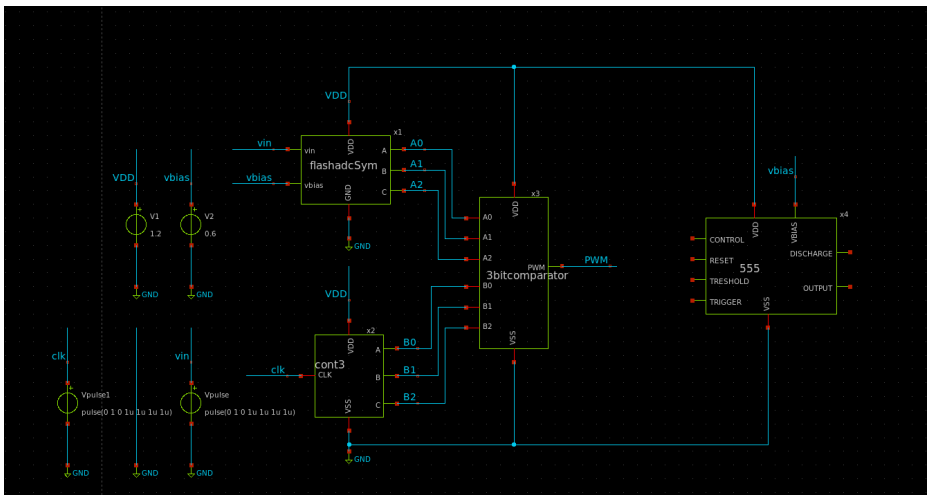

The first section is a circuit based on the classical 555 structure. This block provides the timing-oriented analog functionality and preserves the spirit of the original 555 architecture while being integrated with the rest of the macro.

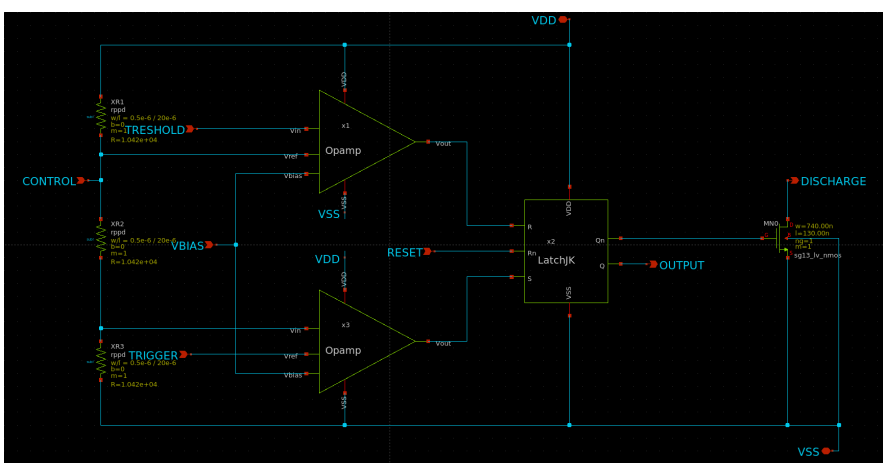

The second section is the PWM generator. In this block, a 3-bit flash ADC receives an input voltage vin between 0 V and 1 V and translates it into a 3-bit digital word. That code represents the analog input level in binary form.

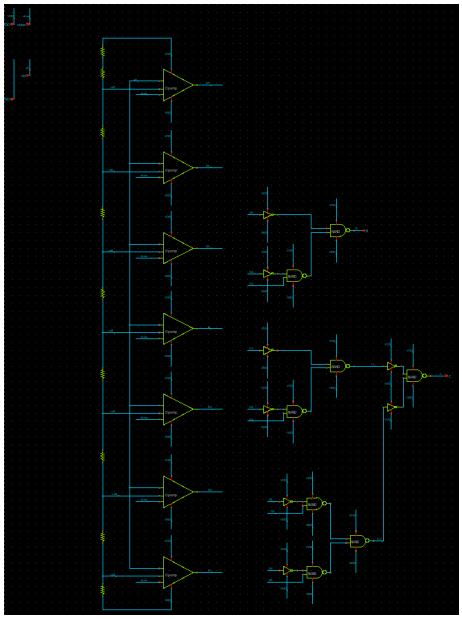

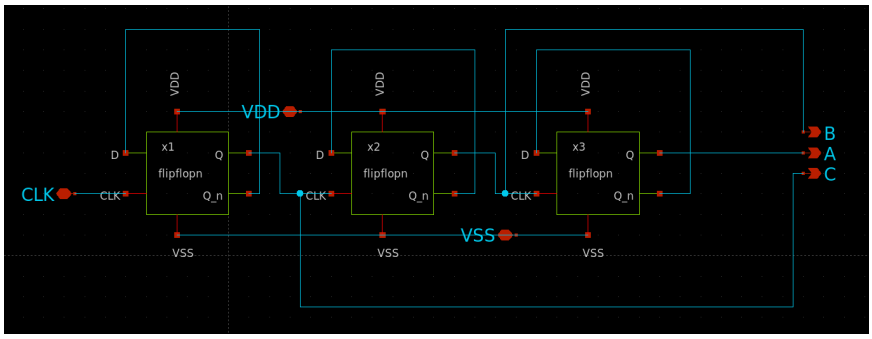

The 3-bit flash-ADC output is then applied to a binary comparator. The other comparator input comes from a 3-bit counter driven by clk. Whenever the counter value is smaller than the ADC code, the comparator output goes high; otherwise, it goes low. This directly creates a PWM waveform whose duty cycle increases as vin increases.

Step 2: Layout

The current layout status is promising: all individual cells have already been completed and verified clean.

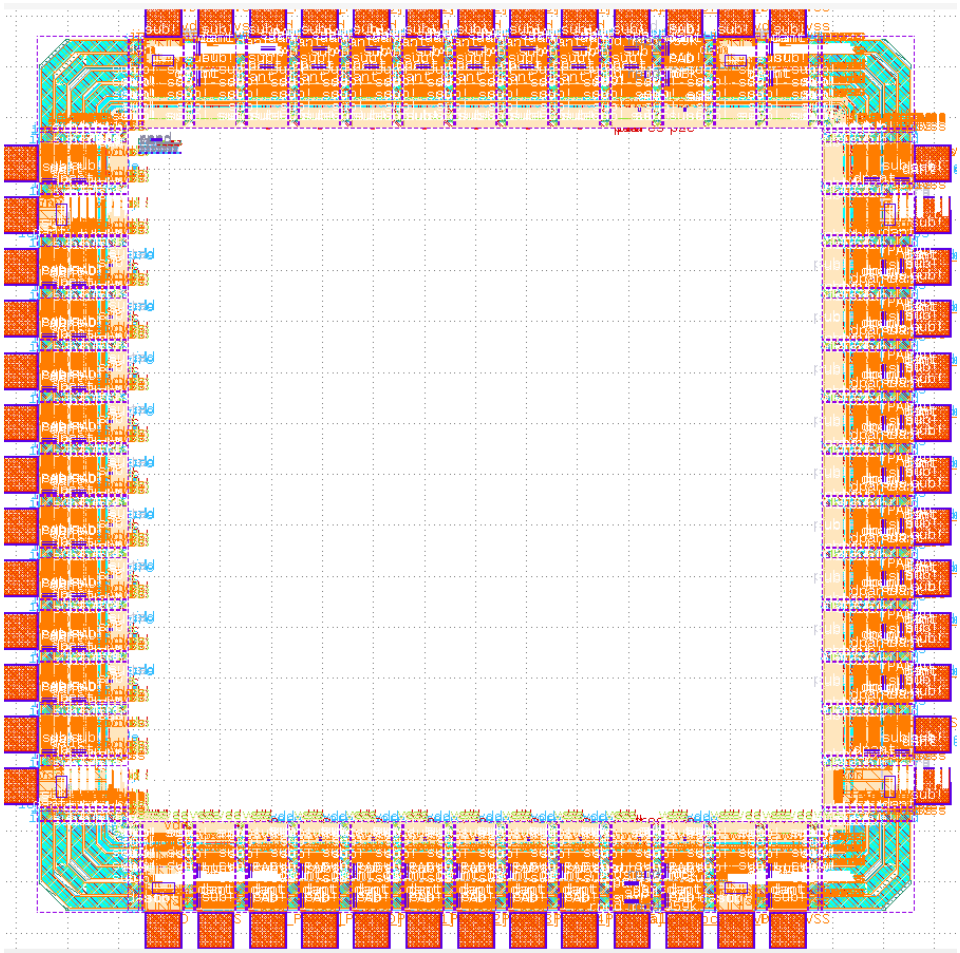

At this stage, the remaining work is mainly focused on the block-to-block interconnections needed to complete the full integrated layout of PWMUSFQ.

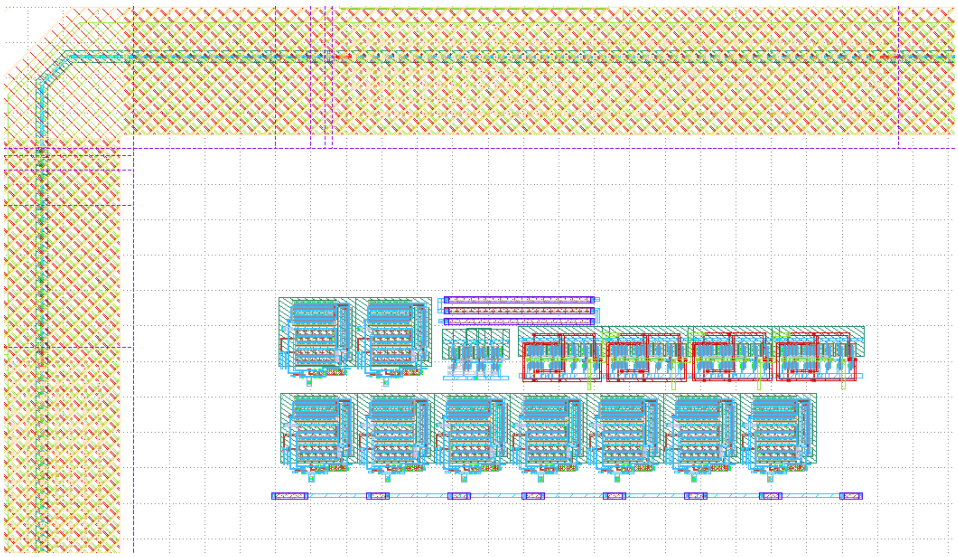

Area estimation: 120umx50um

Step 3: DRC Report

SG13G2_Minimal

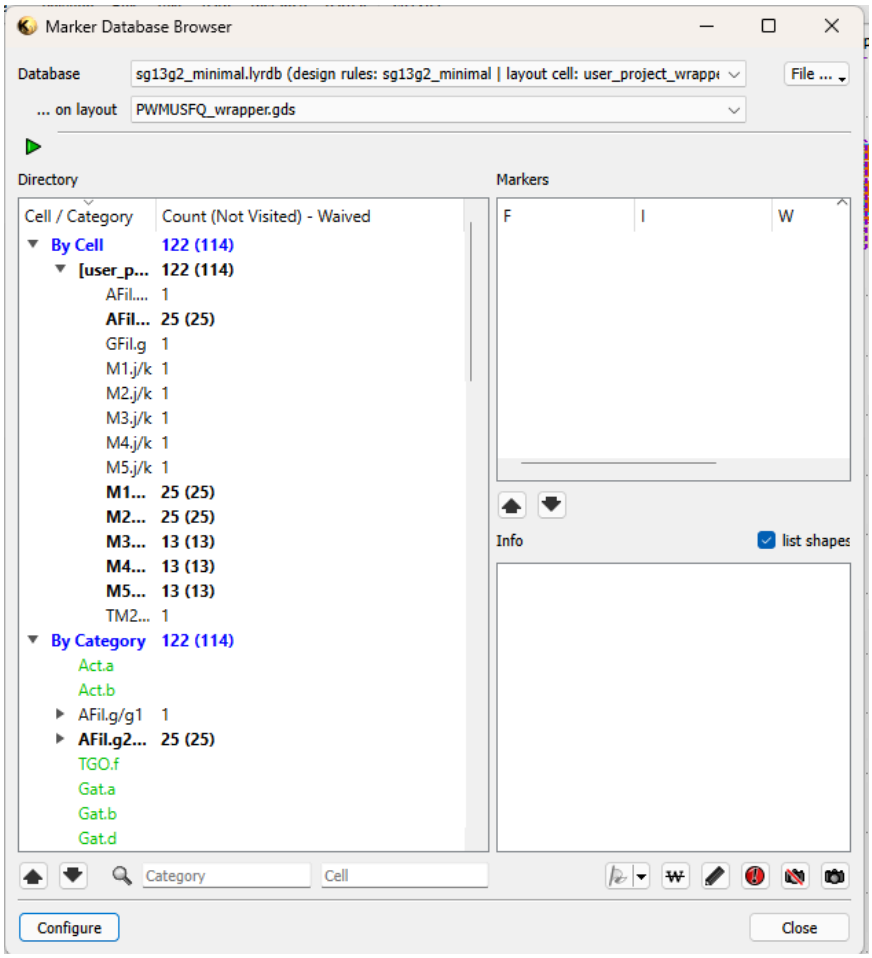

SG13G2_Maximal

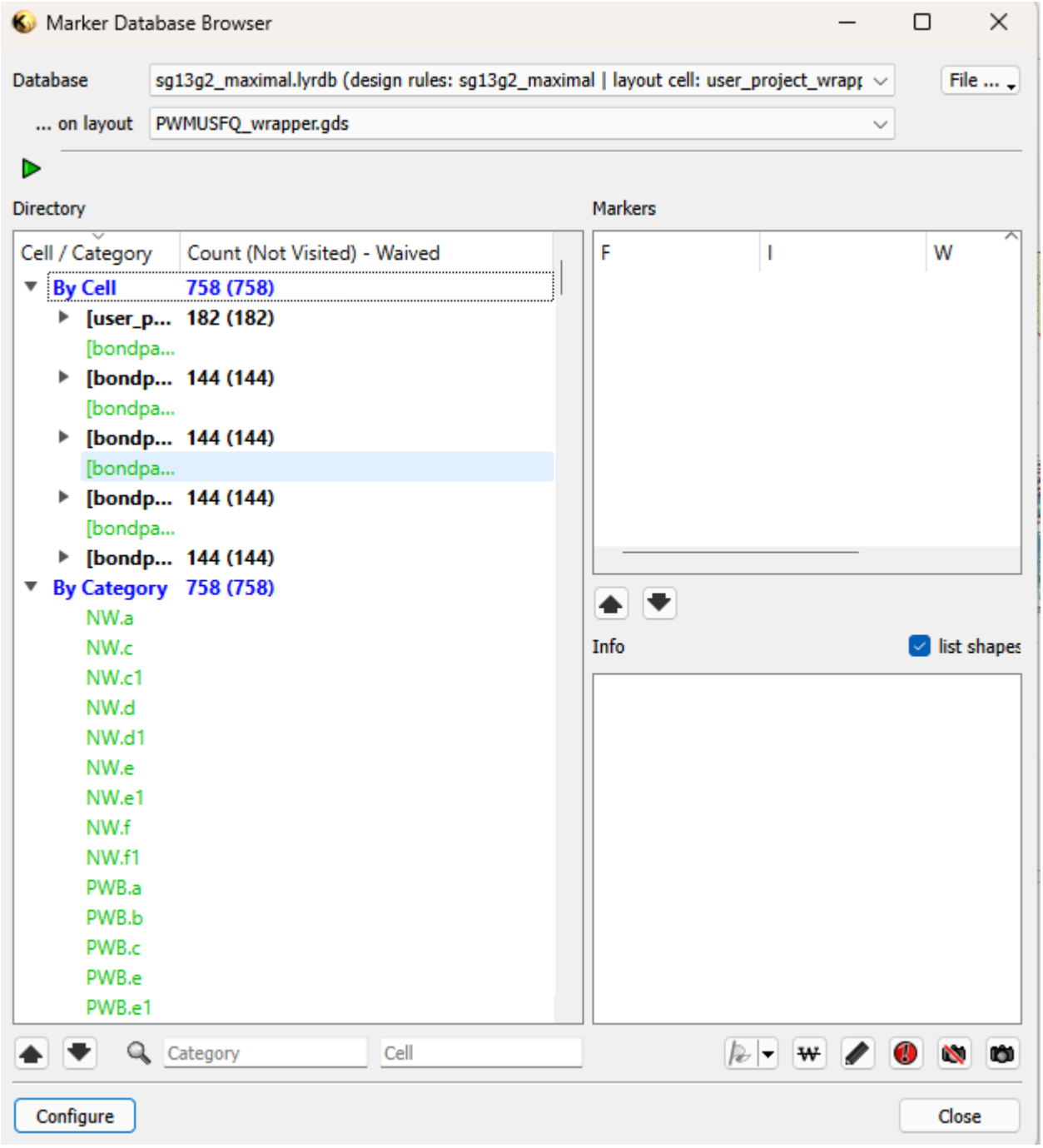

Repository for reports: https://github.com/EduHolg/PWMUSFQ

Running macro C:/Users/Edu-Laptop/KLayout/tech/drc\sg13g2_maximal.lydrc
NW.a: 0
NW.c: 0
NW.c1: 0
NW.d: 0
NW.d1: 0
NW.e: 0
NW.e1: 0

NW.f: 0
NW.f1: 0
PWB.a: 0
PWB.b: 0
PWB.c: 0
PWB.e: 0
PWB.e1: 0
PWB.f: 0
PWB.f1: 0
NBL.a: 0
NBL.e: 0
NBLB.a: 0
NBLB.b: 0
NBLB.c: 0
NBLB.d: 0
Act.a: 0
Act.b: 0
Act.c: 0
Act.d: 0
Act.e: 0
AFil.a: 0
AFil.a1: 0
AFil.b: 0
AFil.c1: 0
AFil.e: 0
AFil.g/g1: 1
AFil.g2/g3: 25
AFil.i: 0
TGO.a: 0
TGO.b: 0
TGO.c: 0
TGO.d: 0
TGO.e: 0
TGO.f: 0
Gat.a: 0
Gat.a3: 0
Gat.a4: 0
Gat.b: 0
Gat.b1: 0
Gat.c: 0
Gat.c: 0
Gat.d: 0
Gat.e: 0
Gat.f: 0
GFil.a: 0
GFil.b: 0
GFil.c: 0

GFil.d.Activ: 0
GFil.d.GatPoly: 0
GFil.d.Cont: 0
GFil.d.pSD: 0
GFil.d.nSD_block: 0
GFil.d.SalBlock: 0
GFil.f: 0
GFil.g: 1
GFil.i: 0
GFil.j: 0
pSD.a: 0
pSD.b: 0
pSD.c: 0
pSD.c1: 0
pSD.d: 0
pSD.d1: 0
pSD.e: 0
pSD.f: 0
pSD.g: 0
pSD.g: 0
pSD.i: 0
pSD.i1: 0
pSD.j: 0
pSD.j1: 0
pSD.k: 0
pSD.l: 0
pSD.m: 0
pSD.n: 0
nSDB.a: 0
nSDB.b: 0
nSDB.c: 0
nSDB.e: 0
EXTB.a: 0
EXTB.b: 0
EXTB.c: 0
Sal.a: 0
Sal.b: 0
Sal.c: 0
Sal.c: 0
Sal.d: 0
Sal.d: 0
Sal.e: 0
Cnt.a: 0
Cnt.b: 0
Cnt.b1: 0
Cnt.c: 0
Cnt.d: 0

Cnt.e: 0
Cnt.f: 0
Cnt.g: 0
Cnt.g1: 0
Cnt.g2: 0
Cnt.h: 0
Cnt.j: 0
CntB.a: 0
CntB.a: 0
CntB.a1: 0
CntB.b: 0
CntB.b1: 0
CntB.b2: 0
CntB.c: 0
CntB.d: 0
CntB.e: 0
CntB.f: 0
CntB.g: 0
CntB.g1: 0
CntB.g2: 0
CntB.h: 0
CntB.h1: 0
CntB.j: 0
M1.a: 0
M1.b: 0
M1.c: 0
M1.c1: 0
M1.d: 0
M1.e: 0
M1.f: 0
M1.j/k: 1
M2.a: 0
M2.b: 0
M2.c: 0
M2.c1: 0
M2.d: 0
M2.e: 0
M2.f: 0
M2.j/k: 1
M3.a: 0
M3.b: 0
M3.c: 0
M3.c1: 0
M3.d: 0
M3.e: 0
M3.f: 0
M3.j/k: 1

M4.a: 0
M4.b: 0
M4.c: 0
M4.c1: 0
M4.d: 0
M4.e: 0
M4.f: 0
M4.j/k: 1
M5.a: 0
M5.b: 0
M5.c: 0
M5.c1: 0
M5.d: 0
M5.e: 0
M5.f: 0
M5.j/k: 1
M1Fil.a1: 0
M1Fil.a2: 0
M1Fil.b: 0
M1Fil.c: 0
M1Fil.d: 0
M1Fil.h/k: 25
M2Fil.a1: 0
M2Fil.a2: 0
M2Fil.b: 0
M2Fil.c: 0
M2Fil.d: 0
M2Fil.h/k: 25
M3Fil.a1: 0
M3Fil.a2: 0
M3Fil.b: 0
M3Fil.c: 0
M3Fil.d: 0
M3Fil.h/k: 13
M4Fil.a1: 0
M4Fil.a2: 0
M4Fil.b: 0
M4Fil.c: 0
M4Fil.d: 0
M4Fil.h/k: 13
M5Fil.a1: 0
M5Fil.a2: 0
M5Fil.b: 0
M5Fil.c: 0
M5Fil.d: 0
M5Fil.h/k: 13
V1.a: 0

V1.b: 0
V1.b1: 0
V1.c: 0
V1.c1: 0
V2.a: 0
V2.b: 0
V2.b1: 0
V2.c: 0
V2.c1: 0
V3.a: 0
V3.b: 0
V3.b1: 0
V3.c: 0
V3.c1: 0
V4.a: 0
V4.b: 0
V4.b1: 0
V4.c: 0
V4.c1: 0
TV1.a: 0
TV1.b: 0
TV1.c: 0
TV1.d: 0
TM1.a: 0
TM1.b: 0
TM1.c/d: 0
TM1Fil.a: 0
TM1Fil.a1: 0
TM1Fil.b: 0
TM1Fil.c: 0
TM1Fil.d: 0
TV2.a: 0
TV2.b: 0
TV2.c: 0
TV2.d: 0
TM2.a: 0
TM2.b: 0
TM2.bR: 0
TM2.c/d: 1
TM2Fil.a: 0
TM2Fil.a1: 0
TM2Fil.b: 0
TM2Fil.c: 0
TM2Fil.d: 0
Pas.a: 0
Pas.b: 0
Pas.c: 0

npnG2.b: 0
npnG2.c: 0
npnG2.d.N_Activ: 0
npnG2.d.NWell: 0
npnG2.d.PWell_block: 0
npnG2.d.nBuLay: 0
npnG2.d.nSD_block: 0
npnG2.d1: 0
npnG2.d2: 0
npnG2.e: 0
npn13G2.a: 0
npn13G2.bR: 0
npn13G2L.a: 0
npn13G2L.b: 0
npn13G2L.cR: 0
npn13G2V.a: 0
npn13G2V.b: 0
npn13G2V.cR: 0
Rsil.a: 0
Rsil.b: 0
Rsil.c: 0
Rsil.d: 0
Rsil.e: 0
Rsil.f: 0
Rppd.a: 0
Rppd.b: 0
Rppd.c: 0
Rppd.c: 0
Rppd.d: 0
Rppd.e: 0
Rhi.a: 0
Rhi.b: 0
Rhi.c: 0
Rhi.d: 0
Rhi.d: 0
Rhi.e: 0
Rhi.f: 0
nmosi.b: 0
nmosi.c: 0
nmosi.d: 0
nmosi.f: 0
nmosi.g: 0
Sdiod.a: 0
Sdiod.b: 0
Sdiod.c: 0
Pad.aR: 0
Pad.a1: 0

Pad.bR: 0
Pad.d: 0
Pad.dR: 0
Pad.d1R: 60
Pad.gR: 0
Pad.jR: 0
Pad.jR: 0
Pad.kR: 576
Padc.b: 0
Padc.d: 0
Seal.a_Activ: 0
Seal.a_pSD: 0
Seal.a_Metal1: 0
Seal.a_Metal2: 0
Seal.a_Metal3: 0
Seal.a_Metal4: 0
Seal.a_Metal5: 0
Seal.a_TopMetal1: 0
Seal.a_TopMetal2: 0
Seal.c: 0
Seal.c: 0
Seal.c1.Via1: 0
Seal.c1.Via1: 0
Seal.c1.Via2: 0
Seal.c1.Via2: 0
Seal.c1.Via3: 0
Seal.c1.Via3: 0
Seal.c1.Via4: 0
Seal.c1.Via4: 0
Seal.c2: 0
Seal.c2: 0
Seal.c3: 0
Seal.c3: 0
Seal.d.Cont: 0
Seal.d.Via1: 0
Seal.d.Via2: 0
Seal.d.Via3: 0
Seal.d.Via4: 0
Seal.d.TopVia1: 0
Seal.d.TopVia2: 0
Seal.e: 0
Seal.f.Activ: 0
Seal.f.pSD: 0
Seal.f.Metal1: 0
Seal.f.Metal2: 0
Seal.f.Metal3: 0
Seal.f.Metal4: 0

Seal.f.Metal5: 0
Seal.f.TopMetal1: 0
Seal.f.TopMetal2: 0
Seal.k: 0
Seal.m: 0
MIM.a: 0
MIM.b: 0
MIM.e: 0
MIM.f: 0
MIM.g: 0
MIM.h: 0
LU.a: 0
LU.b: 0
LU.c: 0
LU.c1: 0
LU.d: 0
LU.d1: 0
Slt.a.M1: 0
Slt.b.M1: 0
Slt.c.M1: 0
Slt.e.M1: 0
Slt.f.M1: 0
Slt.h1: 0
Slt.h1: 0
Slt.a.M2: 0
Slt.b.M2: 0
Slt.c.M2: 0
Slt.e.M2: 0
Slt.f.M2: 0
Slt.h2.M2: 0
Slt.h2.M2: 0
Slt.a.M3: 0
Slt.b.M3: 0
Slt.c.M3: 0
Slt.e.M3: 0
Slt.f.M3: 0
Slt.h2.M3: 0
Slt.h2.M3: 0
Slt.a.M4: 0
Slt.b.M4: 0
Slt.c.M4: 0
Slt.e.M4: 0
Slt.f.M4: 0
Slt.h2.M4: 0
Slt.h2.M4: 0
Slt.a.M5: 0
Slt.b.M5: 0

Slt.c.M5: 0
Slt.e.M5: 0
Slt.f.M5: 0
Slt.g.M5: 0
Slt.h2.M5: 0
Slt.h2.M5: 0
Slt.a.TM1: 0
Slt.b.TM1: 0
Slt.c.TM1: 0
Slt.e.TM1: 0
Slt.f.TM1: 0
Slt.g.TM1: 0
Slt.h3: 0
Slt.a.TM2: 0
Slt.b.TM2: 0
Slt.c.TM2: 0
Slt.e.TM2: 0
Slt.f.TM2: 0
Slt.h4: 0
Pin.a: 0
Pin.b: 0
Pin.e: 0
Pin.f.M2: 0
Pin.f.M3: 0
Pin.f.M4: 0
Pin.f.M5: 0
Pin.g: 0
Pin.h: 0
NW.c1.dig: 0
NW.d1.dig: 0
NW.e1.dig: 0
NW.f1.dig: 0
Cnt.c.Digi: 0
LBE.a: 0
LBE.b: 0
LBE.b1: 0
LBE.b2: 0
LBE.c: 0
LBE.d: 0
LBE.e.dfPad: 0
LBE.e.Passiv: 0
LBE.f: 0
LBE.h: 0
LBE.i: 0
forbidden.BiWind: 0
forbidden.PEmWind: 0
forbidden.BasPoly: 0

forbidden.DeepCo: 0
forbidden.PEmPoly: 0
forbidden.EmPoly: 0
forbidden.LDMOS: 0
forbidden.PBiWind: 0
forbidden.Flash: 0
forbidden.ColWind: 0
OffGrid.NWell: 0
OffGrid.PWell: 0
OffGrid.PWell_block: 0
OffGrid.nBuLay: 0
OffGrid.nBuLay_block: 0
OffGrid.Activ: 0
OffGrid.ThickGateOx: 0
OffGrid.Activ_filler: 0
OffGrid.GatPoly_filler: 0
OffGrid.GatPoly: 0
OffGrid.pSD: 0
OffGrid.nSD: 0
OffGrid.nSD_block: 0
OffGrid.EXTBlock: 0
OffGrid.SalBlock: 0
OffGrid.Cont: 0
OffGrid.Activ_nofill: 0
OffGrid.GatPoly_nofill: 0
OffGrid.Metal1: 0
OffGrid.Via1: 0
OffGrid.Metal2: 0
OffGrid.Via2: 0
OffGrid.Metal3: 0
OffGrid.Via3: 0
OffGrid.Metal4: 0
OffGrid.Via4: 0
OffGrid.Metal5: 0
OffGrid.MIM: 0
OffGrid.Vmim: 0
OffGrid.TopVia1: 0
OffGrid.TopMetal1: 0
OffGrid.TopVia2: 0
OffGrid.TopMetal2: 0
OffGrid.Passiv: 0
OffGrid.Metal1_filler: 0
OffGrid.Metal2_filler: 0
OffGrid.Metal3_filler: 0
OffGrid.Metal4_filler: 0
OffGrid.Metal5_filler: 0
OffGrid.TopMetal1_filler: 0

OffGrid.TopMetal2_filler: 0
OffGrid.Metal1_nofill: 0
OffGrid.Metal2_nofill: 0
OffGrid.Metal3_nofill: 0
OffGrid.Metal4_nofill: 0
OffGrid.Metal5_nofill: 0
OffGrid.TopMetal1_nofill: 0
OffGrid.TopMetal2_nofill: 0
OffGrid.NoMetFiller: 0
OffGrid.Metal1_slit: 0
OffGrid.Metal2_slit: 0
OffGrid.Metal3_slit: 0
OffGrid.Metal4_slit: 0
OffGrid.Metal5_slit: 0
OffGrid.TopMetal1_slit: 0
OffGrid.TopMetal2_slit: 0
OffGrid.EdgeSeal: 0
OffGrid.EmWind: 0
OffGrid.dfpad: 0
OffGrid.Polimide: 0
OffGrid.TRANS: 0
OffGrid.IND: 0
OffGrid.RES: 0
OffGrid.RFMEM: 0
OffGrid.Recog_diode: 0
OffGrid.Recog_esd: 0
OffGrid.DigiBnd: 0
OffGrid.DigiSub: 0
OffGrid.SRAM: 0
OffGrid.dfpad_pillar: 0
OffGrid.dfpad_sbump: 0
OffGrid.DeepVia: 0
OffGrid.LBE: 0
OffGrid.PolyRes: 0
Number of DRC errors: 758
Runtime in seconds: 358.6