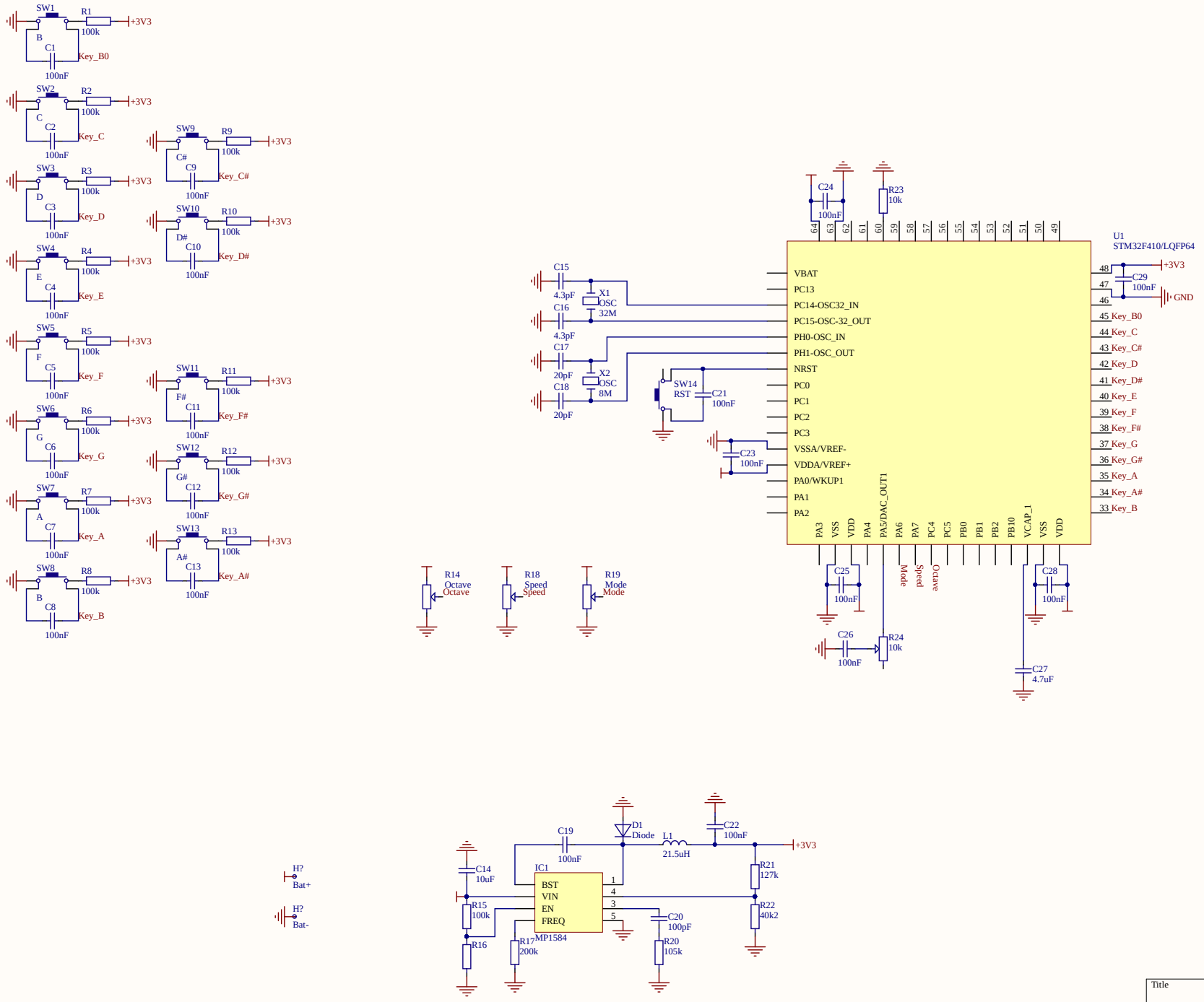

Title		
Size A3	Number	Revision
Date: 16.05.2019	Sheet of	
File: C:\Users\..\stm32-synthesizer_Schematic.SchDoc	Drawn By:	

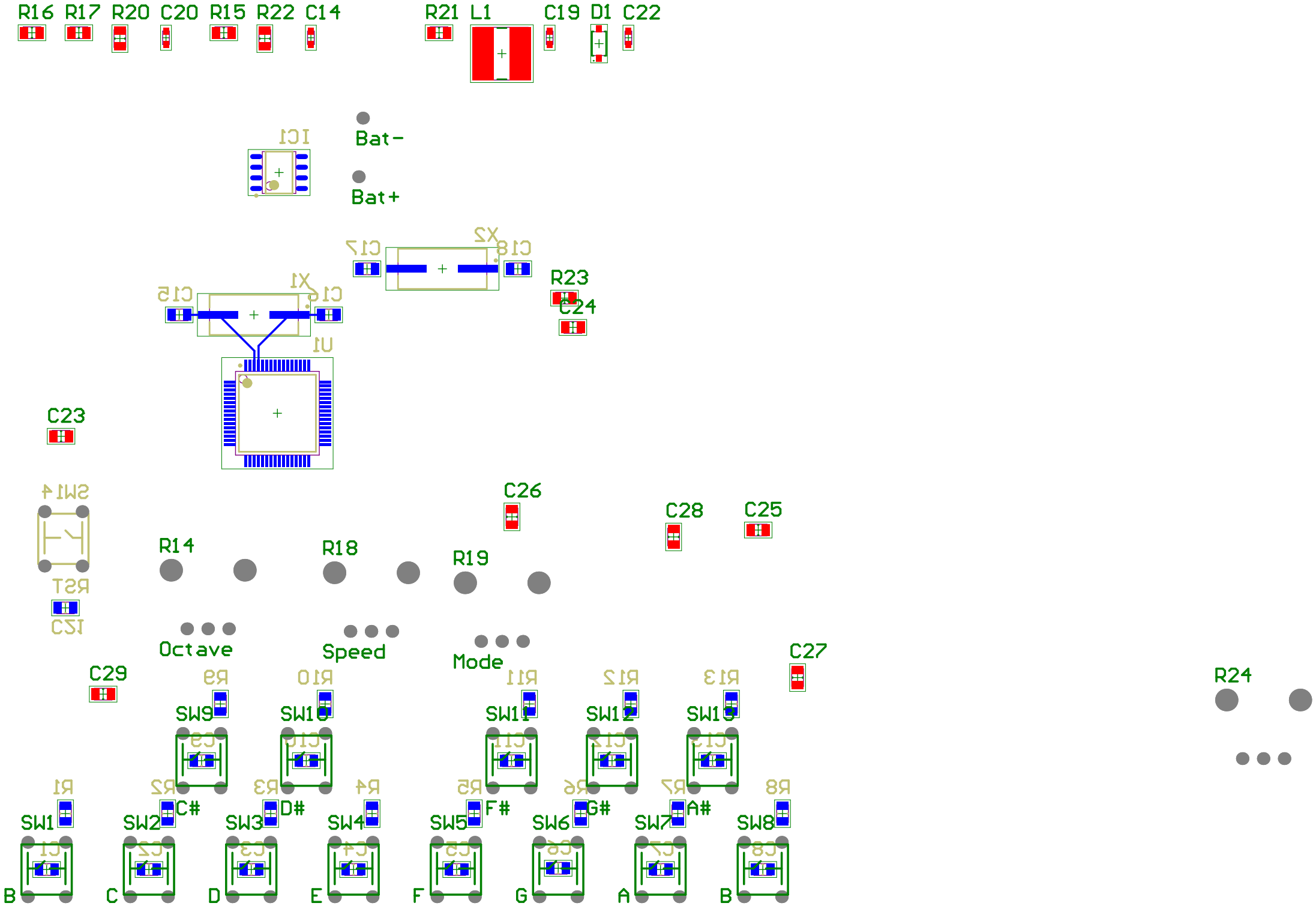
R16
R17
R20
C20
R15
R22
C14
R21
L1
C19
D1
C22
IC1
Bat-
Bat+
X2
C17
C18
R23
C24
X1
C15
C16
U1
C23
SW14
RST
C26
C28
C25
R14
R18
R19
C27
Octave
Speed
Mode
C29
R24
R9
R10
R11
R12
R13
SW9
SW10
SW11
SW12
SW13
R1
R2
R3
R4
R5
R6
R7
R8
SW1
SW2
SW3
SW4
SW5
SW6
SW7
SW8
C#
D#
F#
G#
A#
B
C
D
E
F
G
A
B