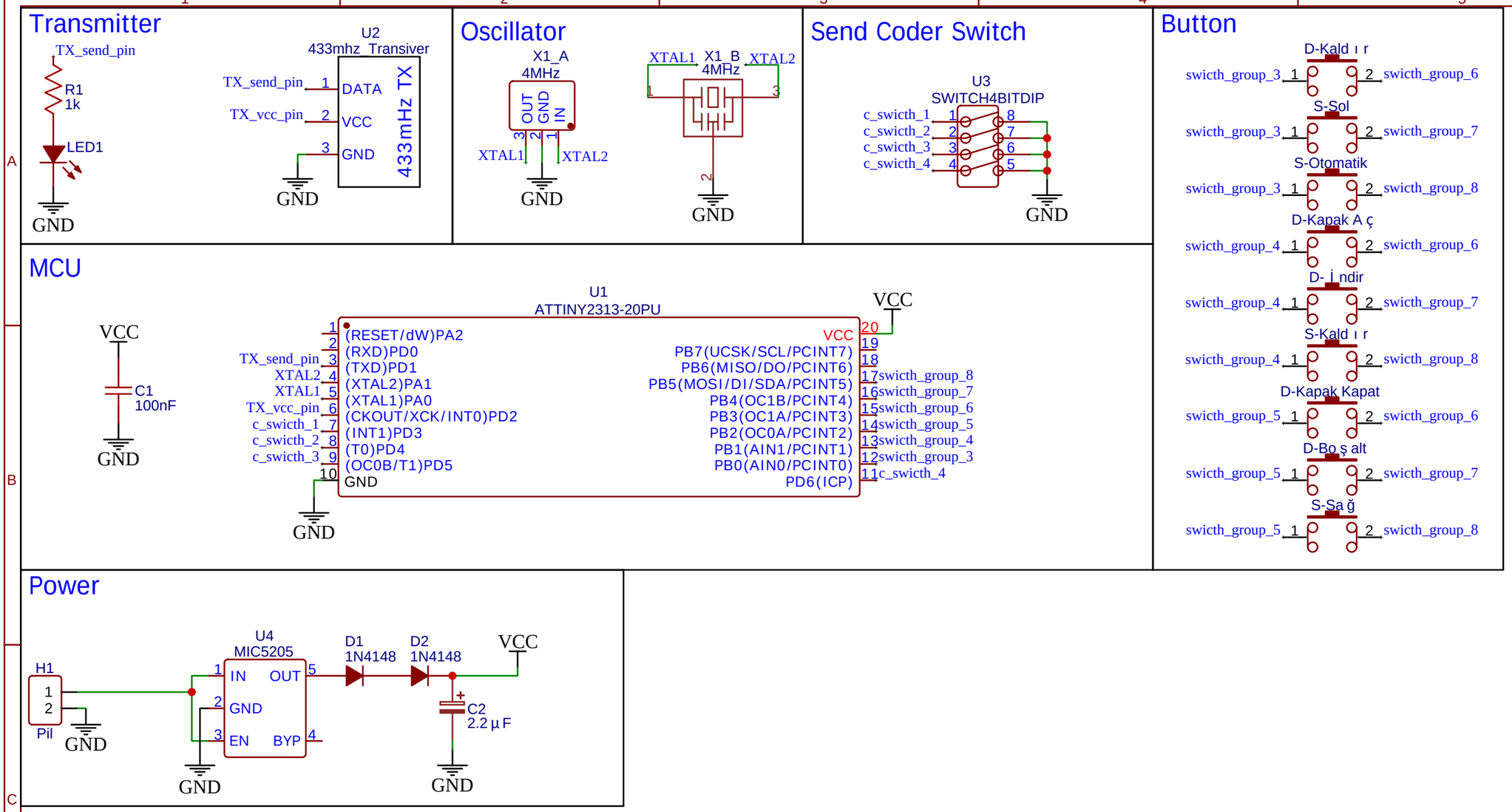

TITLE: Bar 开 Makina Remote	REV: V1.2
Company: Doruk Teknik	Sheet: 1/1
Date: 2023-01-11 Drawn By: Efkan G ü venir	