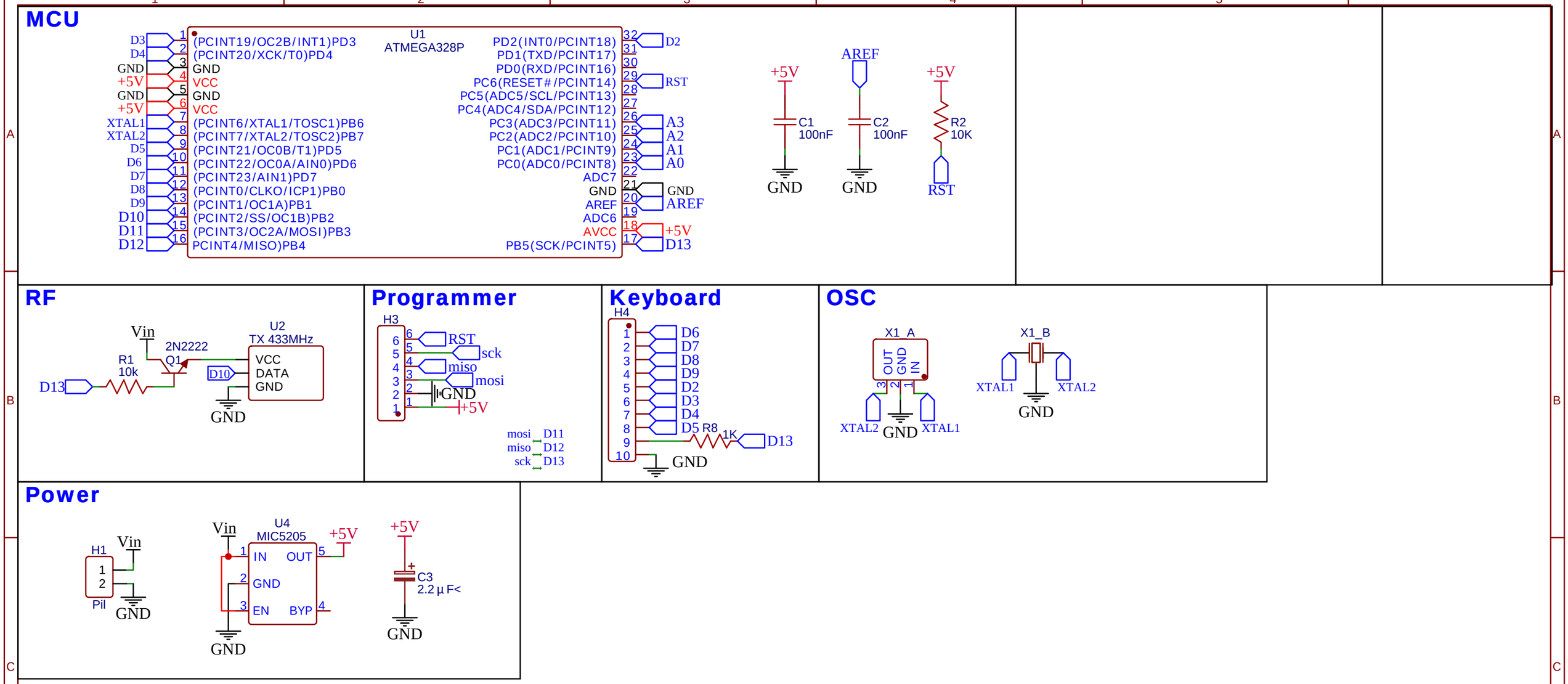

TITLE: **Harmak Remote MCU**		REV: **MCU V1.4**
	Company: Doruk Teknik	Sheet: 1/1
	Date: 2023-05-01 Drawn By: Efkan Güvenir	