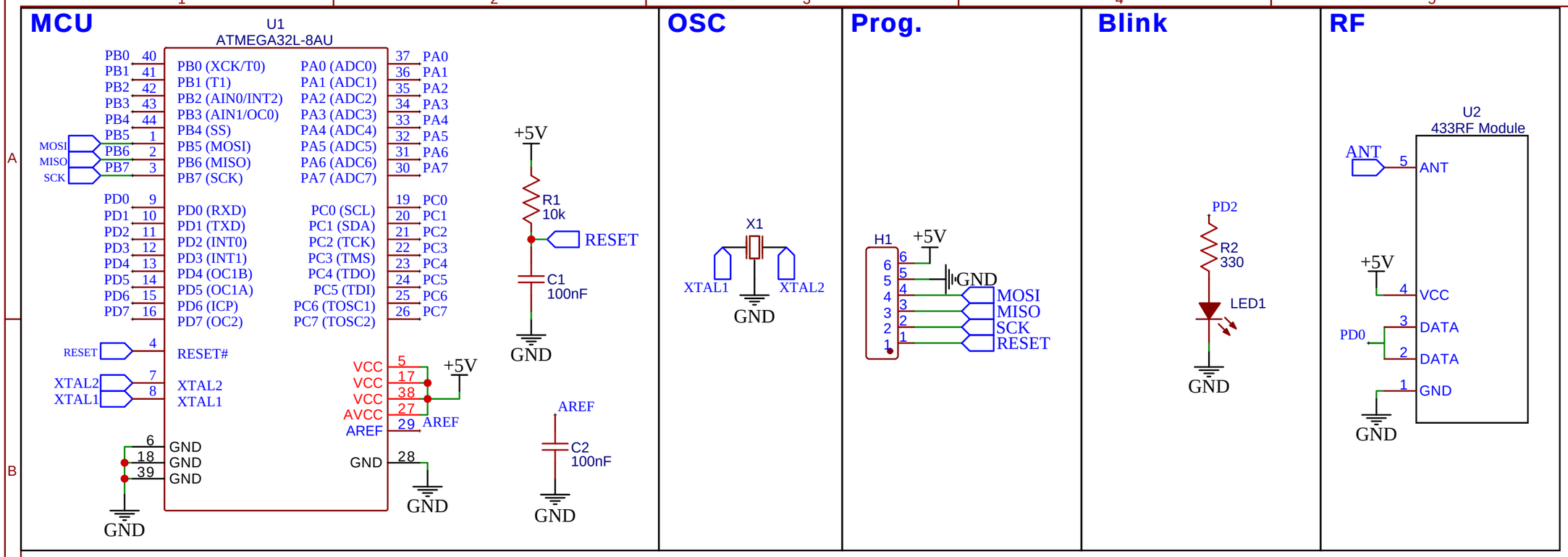

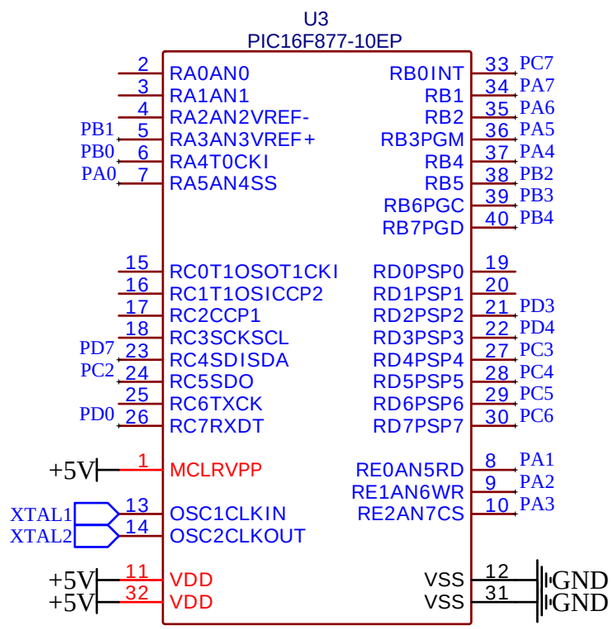

TITLE: Detay E. MCU Pic Converter		REV: V1.1
	Company: Doruk Teknik	Sheet: 1/1
	Date: 2023-07-26 Drawn By: Efkan Güvenir	