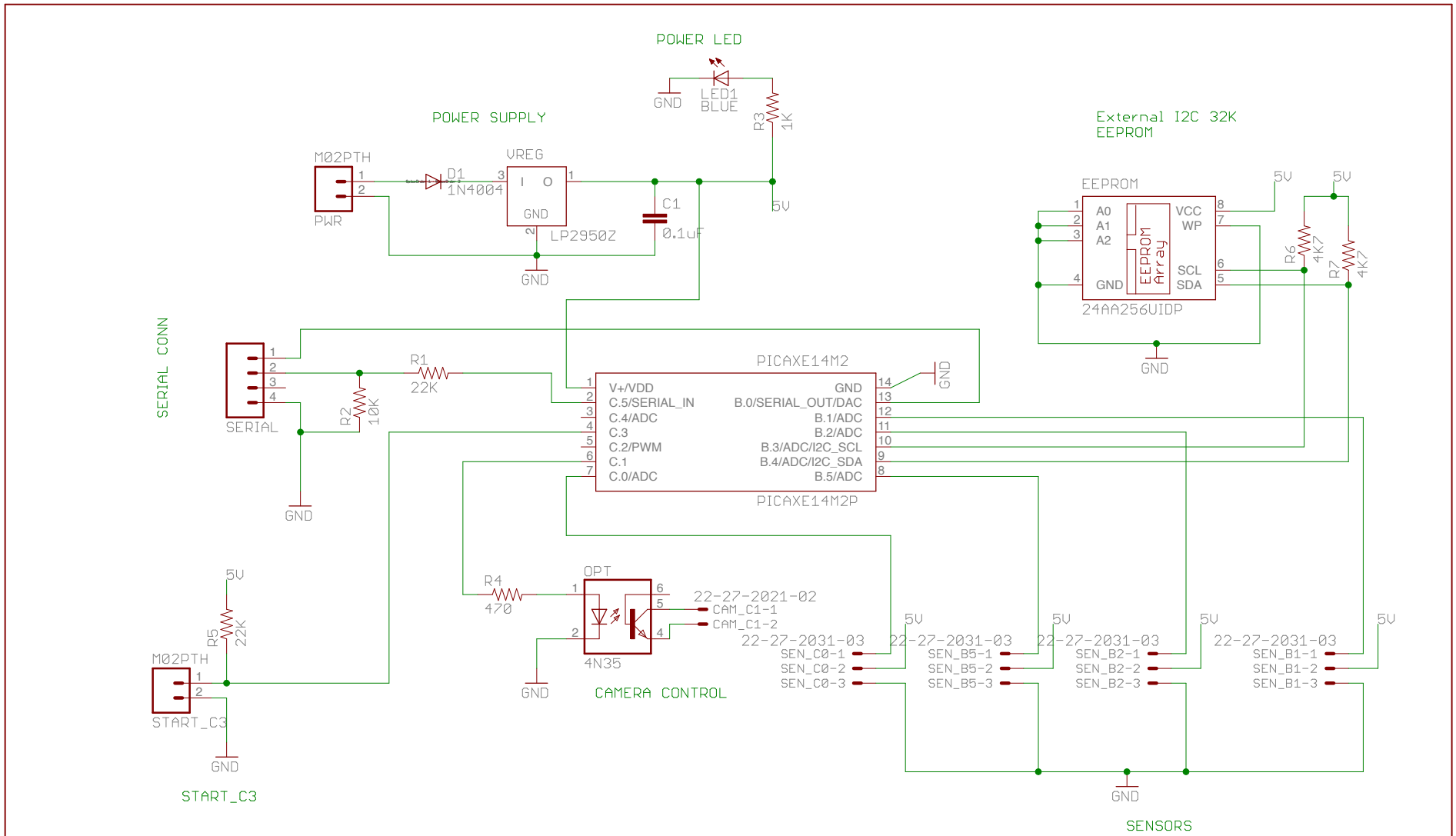

Created by Dan Ruder

TITLE: Flight Computer v1.0

Document Number:

REV:

Date: 10/10/14 12:45 AM

Sheet: 1/1