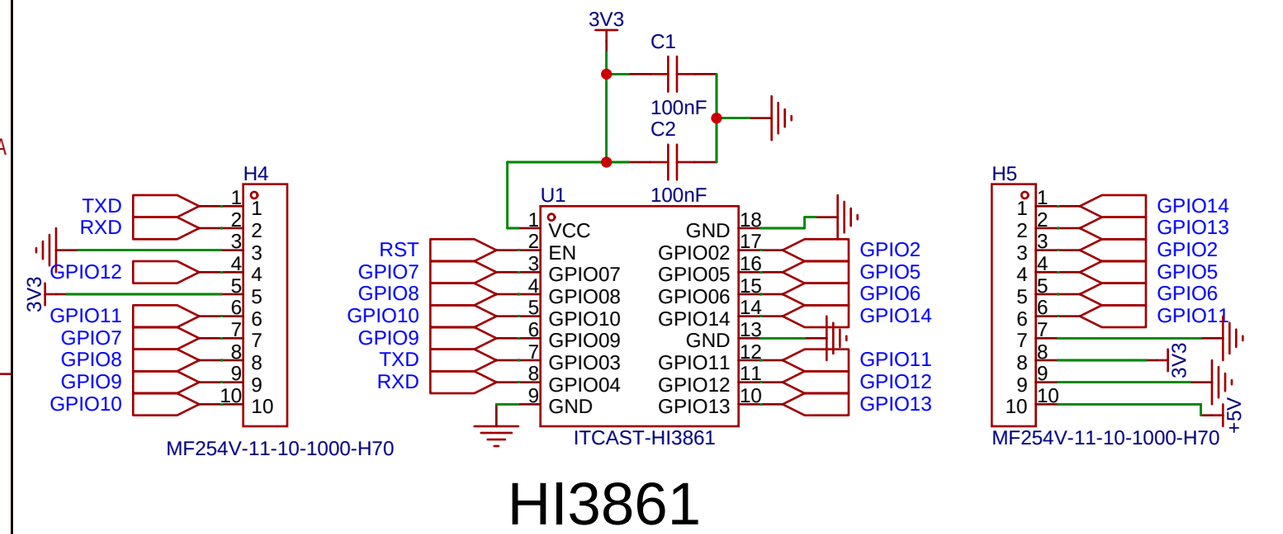

HI3861

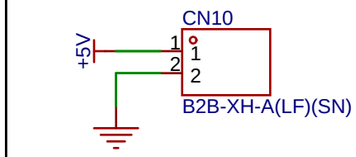

5V转接2pin

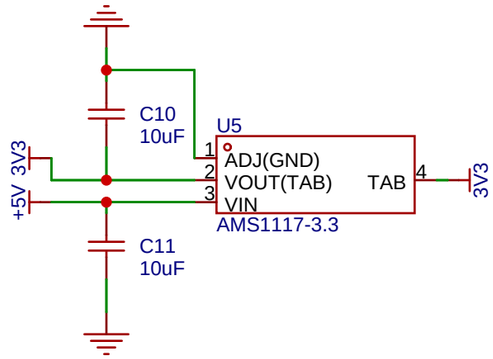

5V转3V3

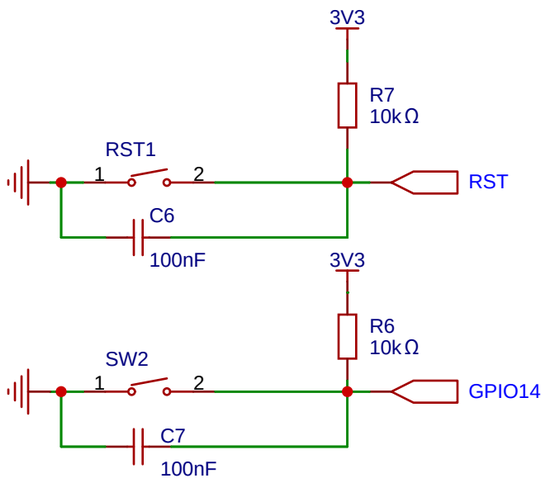

按键

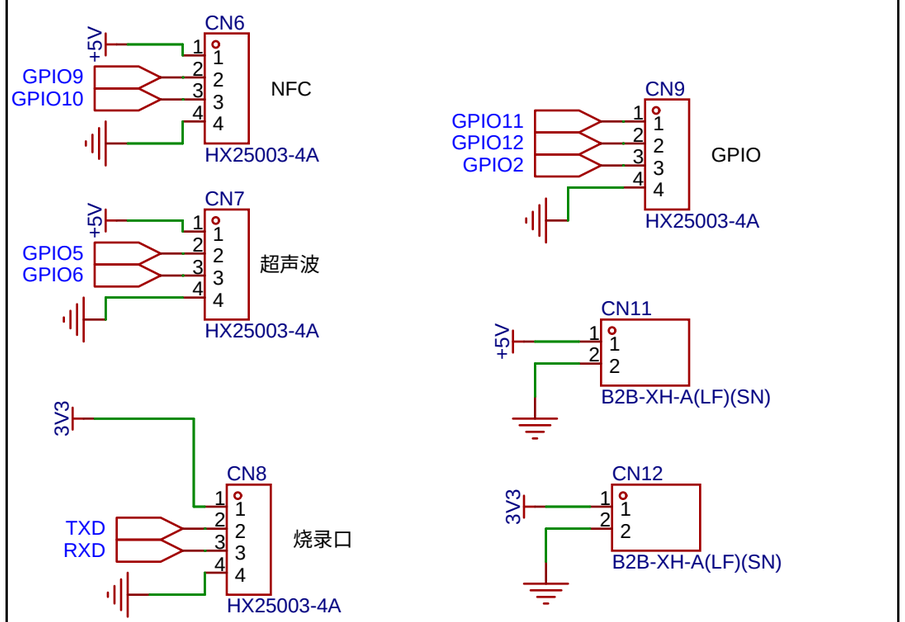

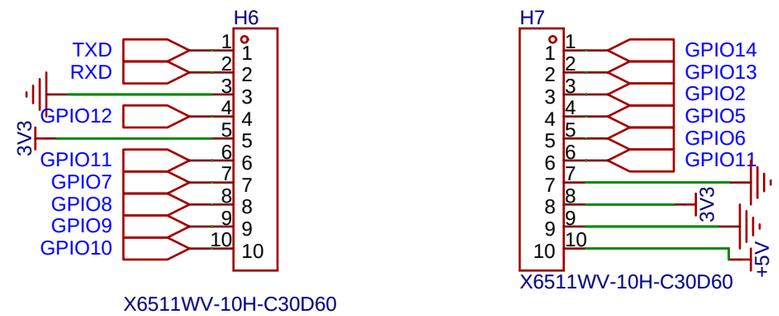

Schematic	hi3861试制	Update Date	2023-06-20
		Create Date	2023-06-07
Page	P1	Part Number	
Drawed	hi3861_test		
Reviewed			
	VER	SIZE	PAGE 1 OF 1
嘉立创EDA	V1.0	A4	嘉立创EDA