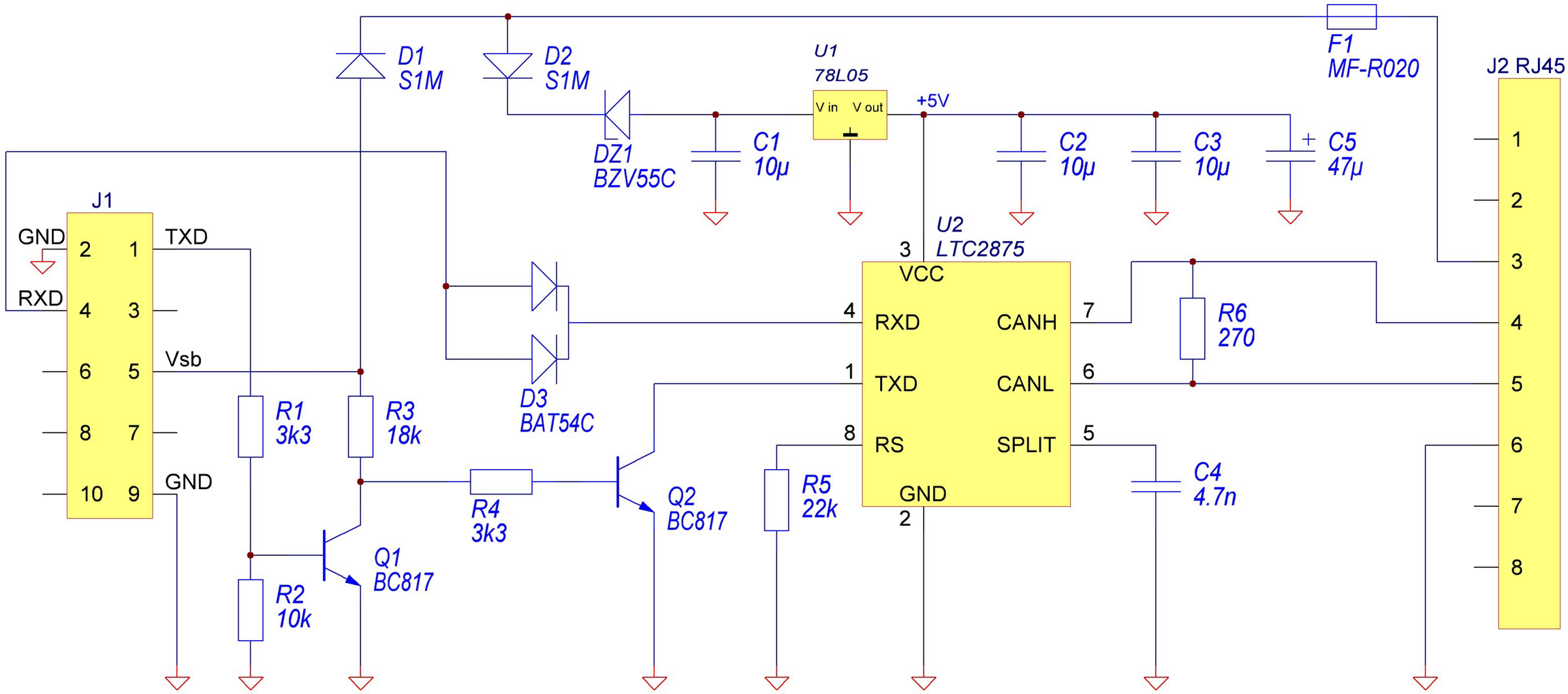

IBT4N

Modifications			Date	Name	Description	Page no.
Date	Name				Nice IBT4N	
						Pages
					Schematic no.	