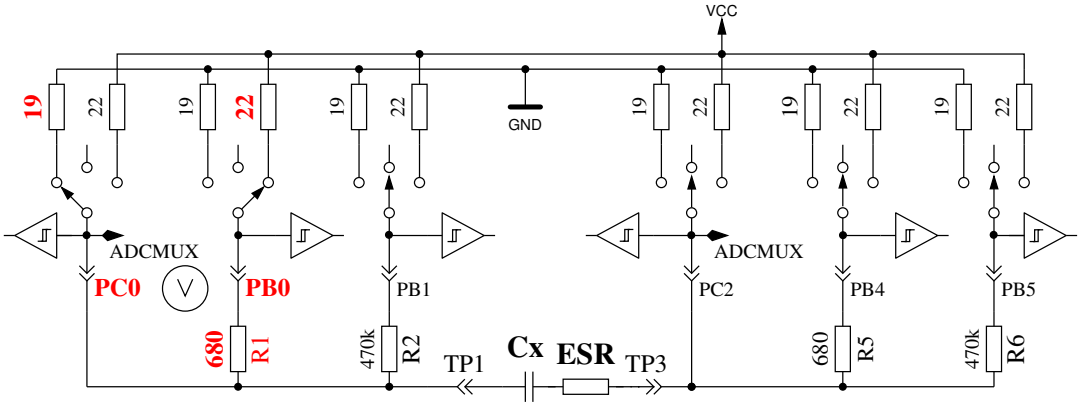
VCC
GND
19
22
ADCMUX
PC0
PB0
PB1
PC2
PB4
PB5
680
R1
470k
R2
TP1
Cx
ESR
TP3
R5
R6

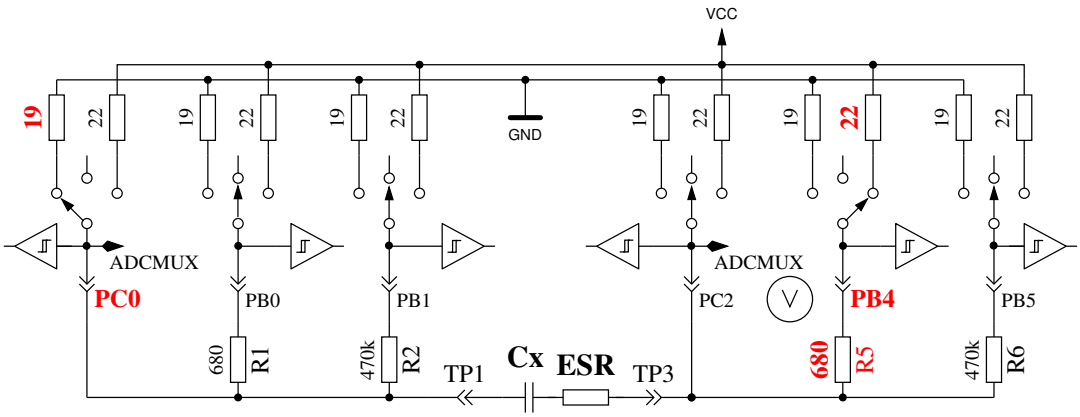
VCC
GND
19
22
ADCMUX
PC0
PB0
PB1
PC2
PB4
PB5
680
R1
470k
R2
TP1
Cx
ESR
TP3
R5
R6

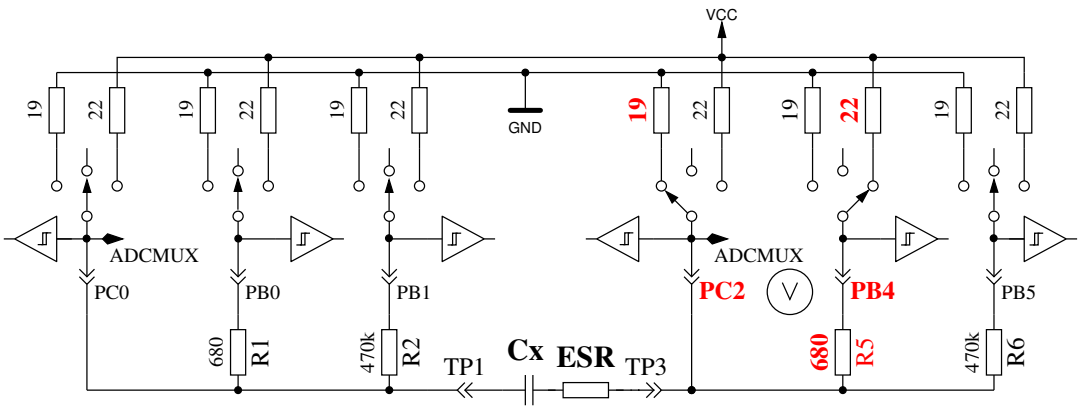
VCC
GND
19
22
ADCMUX
PC0
PB0
PB1
PC2
PB4
PB5
680
R1
470k
R2
TP1
Cx
ESR
TP3
R5
R6

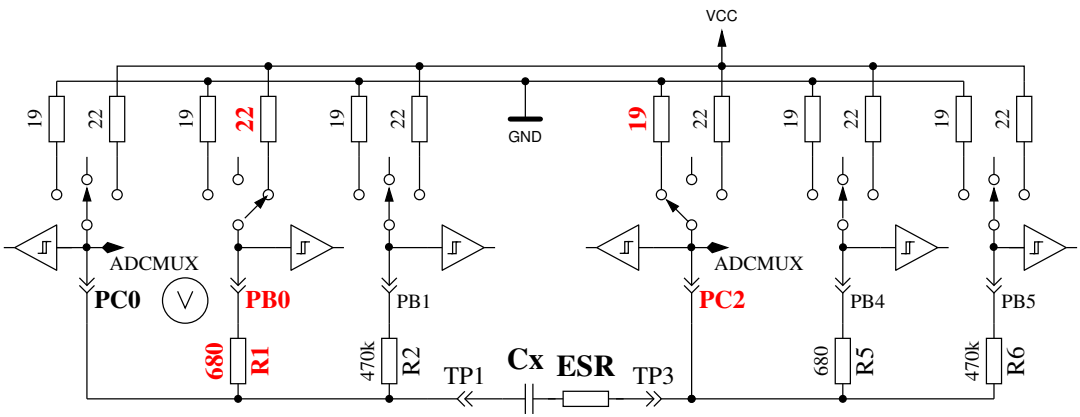
VCC
GND
19
22
ADCMUX
PC0
PB0
PB1
PC2
PB4
PB5
680
R1
470k
R2
TP1
Cx
ESR
TP3
R5
R6