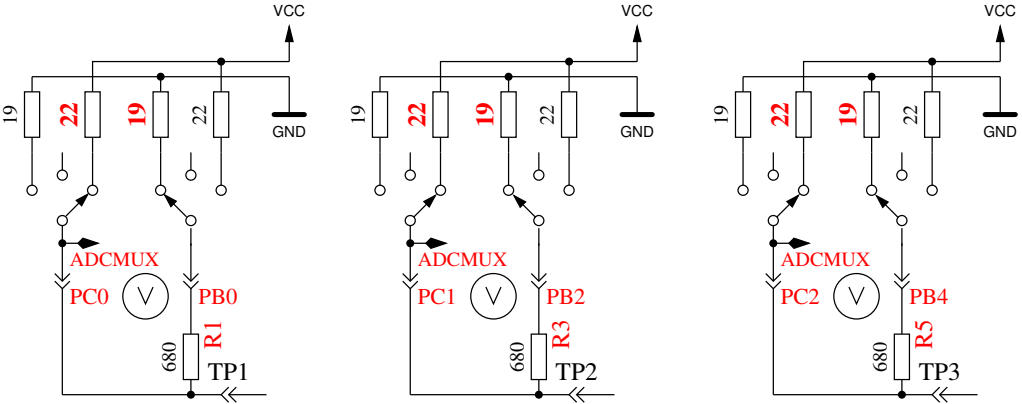
VCC
19
22
19
22
GND
ADCMUX
PC0
PB0
R1
680
TP1
VCC
19
22
19
22
GND
ADCMUX
PC1
PB2
R3
680
TP2
VCC
19
22
19
22
GND
ADCMUX
PC2
PB4
R5
680
TP3