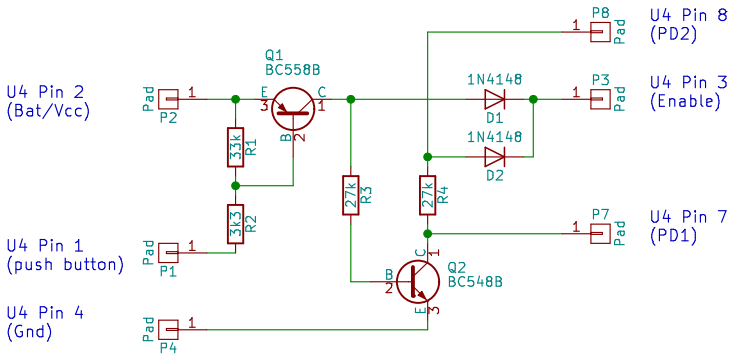

Replacement for control MCU U4

Sheet: /
File: TC1-Mod.sch

Title: U4 modfication for TC-1 clone

Size: A4	Date:	Rev:
KiCad E.D.A. kicad 5.0.2+dfsg1-1		Id: 1/1