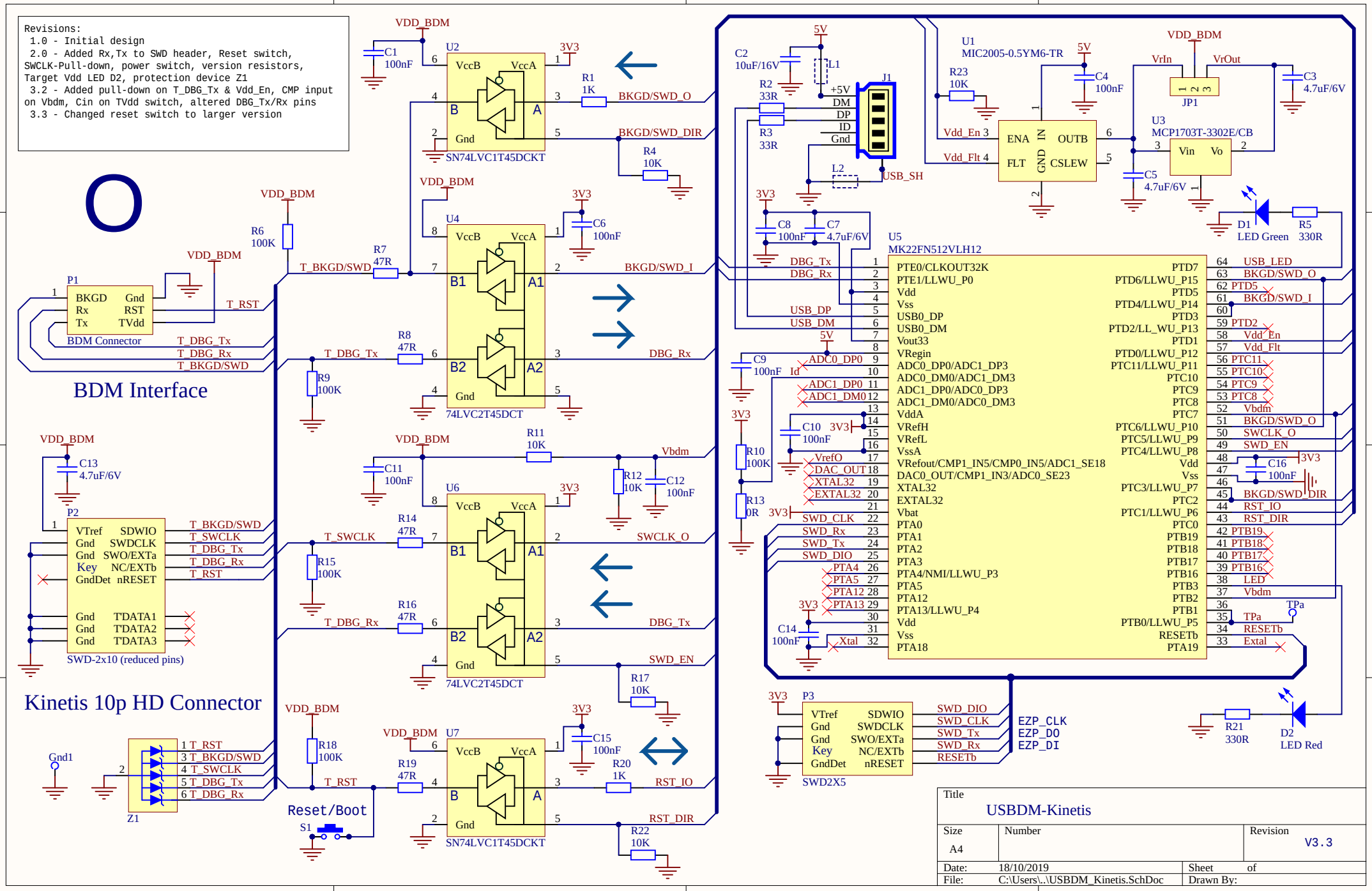
Revisions:
1.0 - Initial design
2.0 - Added Rx,Tx to SWD header, Reset switch, SWCLK-Pull-down, power switch, version resistors, Target Vdd LED D2, protection device Z1
3.2 - Added pull-down on T_DBG_Tx & Vdd_En, CMP input on Vbdm, Cin on TVdd switch, altered DBG_Tx/Rx pins
3.3 - Changed reset switch to larger version
BDM Interface
Kinetis 10p HD Connector
Reset/Boot
U2 SN74LVC1T45DCKT
U4 74LVC2T45DCT
U6 74LVC2T45DCT
U7 SN74LVC1T45DCKT
U1 MIC2005-0.5YM6-TR
U3 MCP1703T-3302E/CB
U5 MK22FN512VLH12
P1 BDM Connector
P2 SWD-2x10 (reduced pins)
P3 SWD2X5
J1
JP1
D1 LED Green
D2 LED Red
Z1
S1
Title
USBDM-Kinetis
Size A4
Number
Revision V3.3
Date: 18/10/2019
Sheet of
File: C:\Users\..\USBDM_Kinetis.SchDoc
Drawn By:

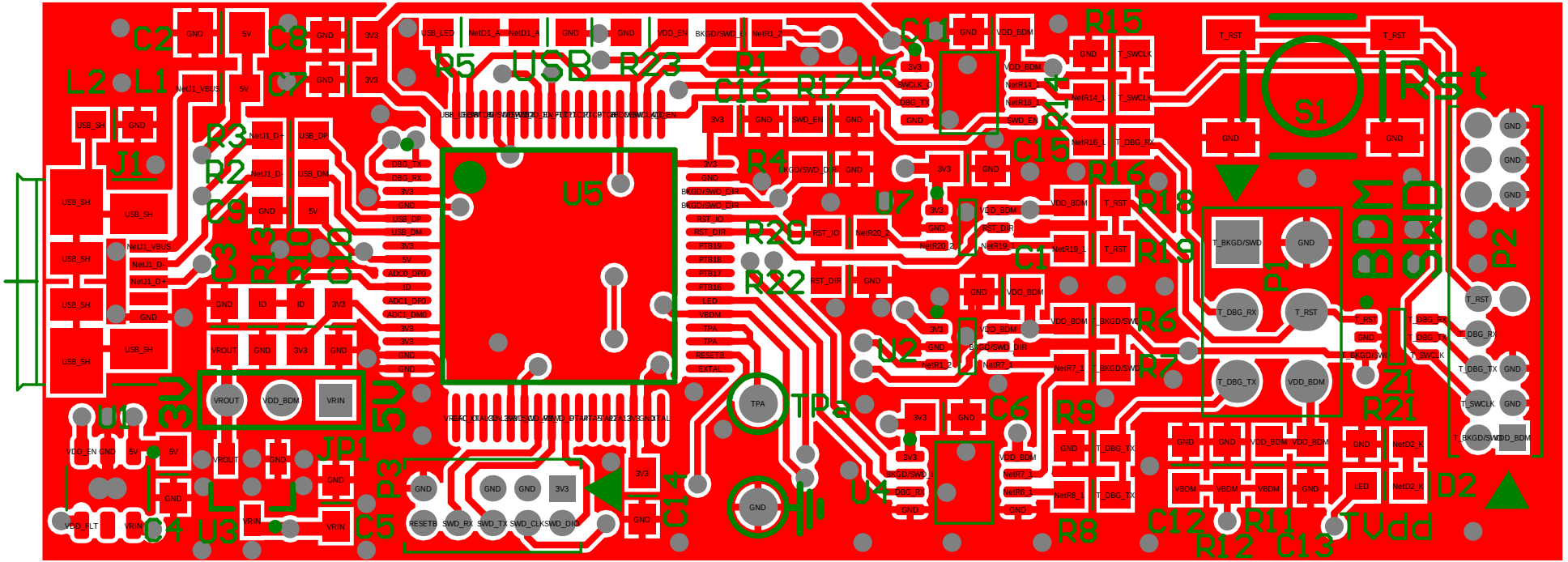
C2
L2
L1
C8
C7
R5
USB
R23
R1
C16
R17
U6
C11
R15
Rst
S1
J1
R3
R2
C9
U5
R4
R20
U7
R16
R18
R19
C1
R22
U2
R6
R7
C3
R13
R10
R8
p1
p2
BDM
GND
Z1
R21
U1
3V
5V
JP1
TPa
C6
R9
U4
D2
P3
C14
C5
U3
C4
R8
C12
R11
R12
C13
TVdd

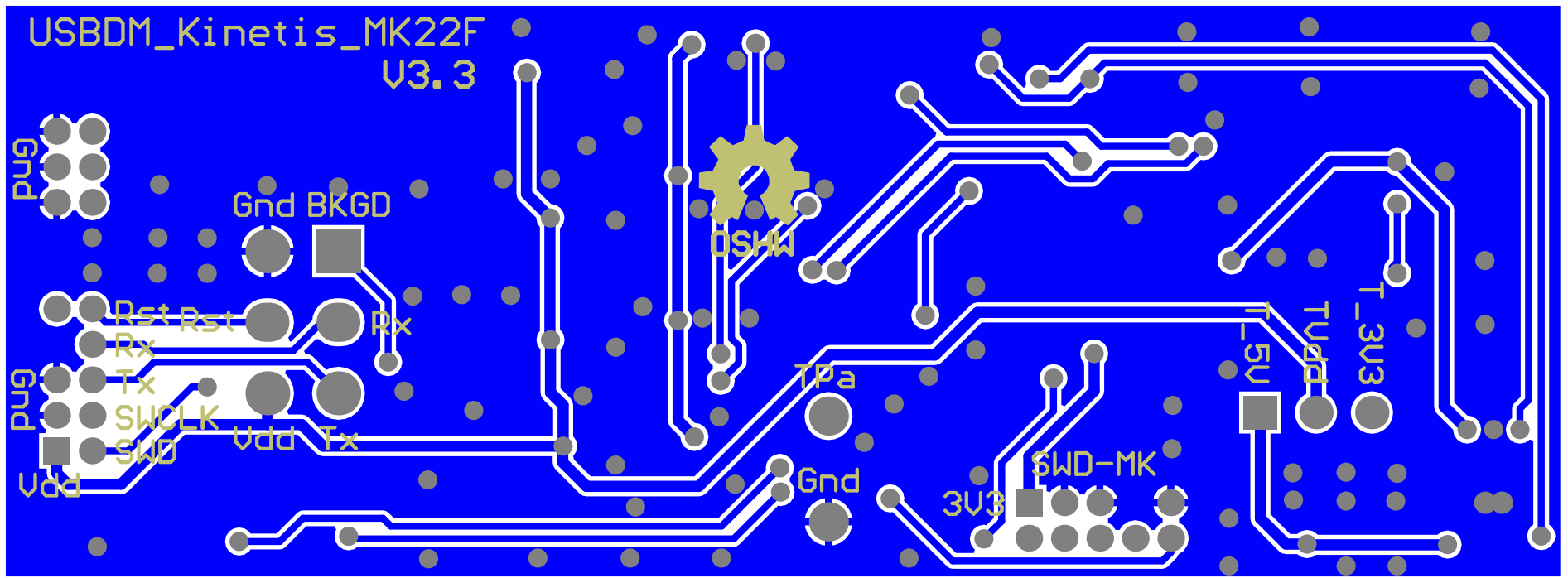
USBDM_Kinetis_MK22F
V3.3
Gnd
Gnd BKGD
Rst Rst
Rx
Rx
Tx
SWCLK
SWD
Vdd
Tx
Gnd
Vdd
OSHW
TPa
Gnd
3V3
SWD-MK
T_5V
TVDD
T_3V3

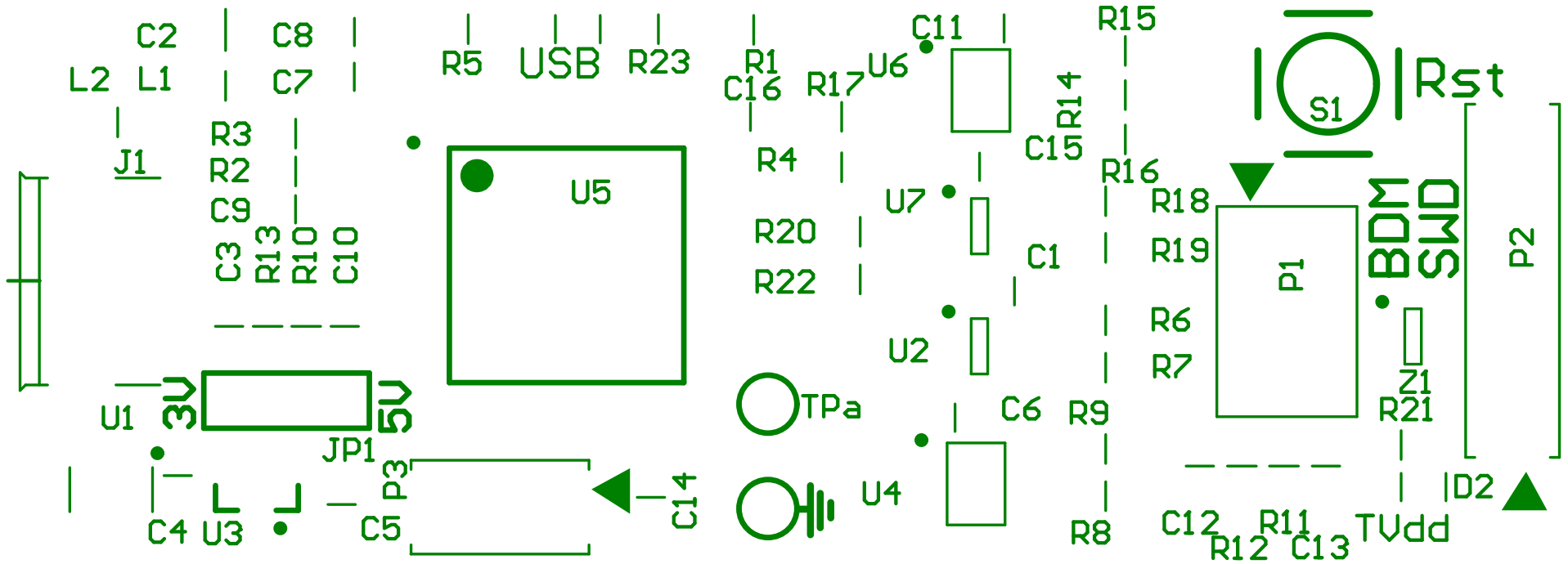
C2
C8
L2
L1
C7
R5
USB
R23
R1
C16
R17
U6
C11
R15
R14
C15
R16
S1
Rst
J1
R3
R2
C9
U5
R4
R20
R22
U7
C1
R18
R19
P1
BDM
SWD
P2
C3
R13
R10
C10
R6
R7
U2
Z1
R21
U1
3V
5V
JP1
TPa
C6
R9
P3
C14
U4
D2
C4
U3
C5
R8
C12
R11
TVdd
R12
C13

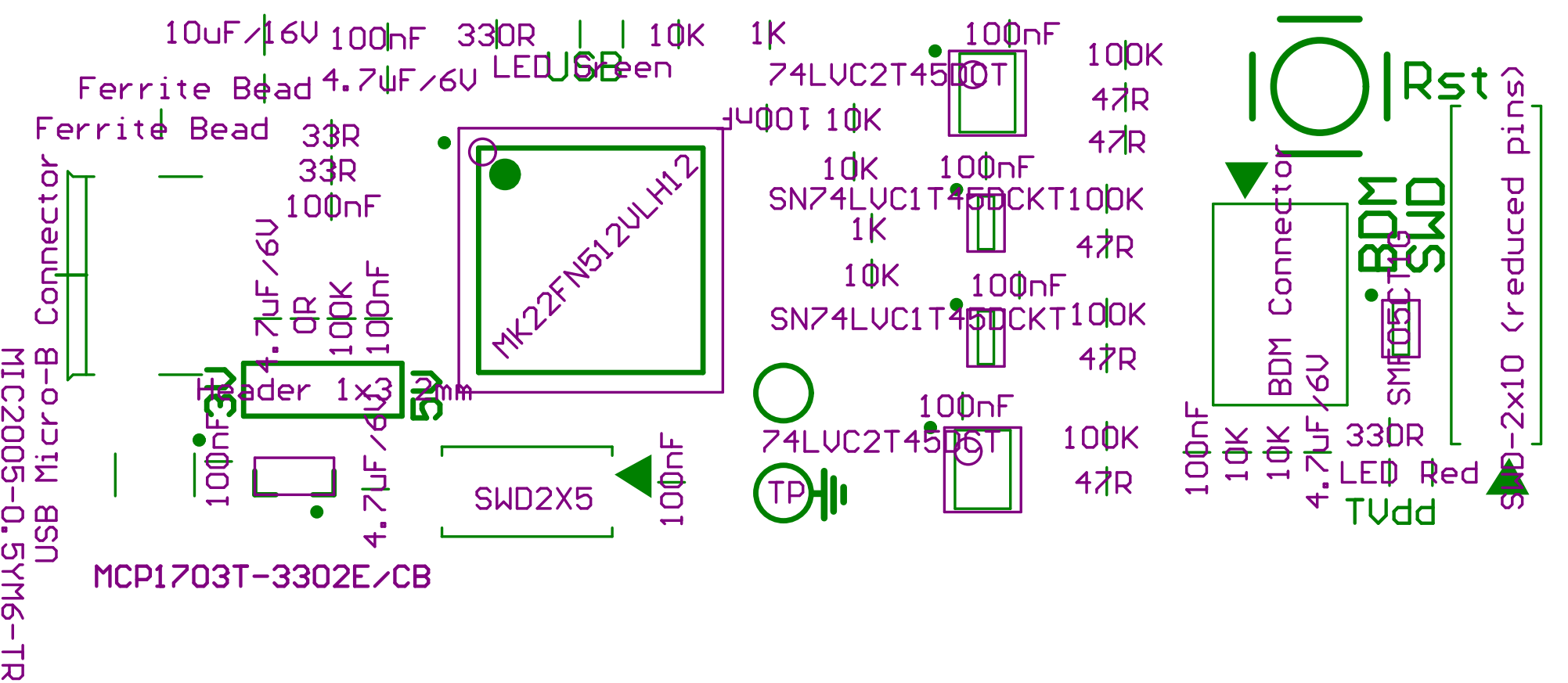
10uF/16V
100nF
330R
10K
1K
LED Green
USB
4.7uF/6V
Ferrite Bead
Ferrite Bead
33R
33R
100nF
MK22FN512VLH12
74LVC2T45DCT
100nF
10K
10K
100nF
SN74LVC1T45DCKT
1K
10K
100nF
SN74LVC1T45DCKT
100nF
74LVC2T45DCT
100K
47R
47R
100K
47R
100K
47R
100K
47R
Rst
BDM Connector
BDM
SWD
SMF05C
SWD-2x10 (reduced pins)
MIC2005-0.5YM6-TR
USB Micro-B Connector
4.7uF/6V
0R
100K
100nF
Header 1x3 2mm
3V
5V
100nF
4.7uF/6V
SWD2X5
100nF
TP
MCP1703T-3302E/CB
100nF
10K
10K
4.7uF/6V
330R
LED Red
TVdd