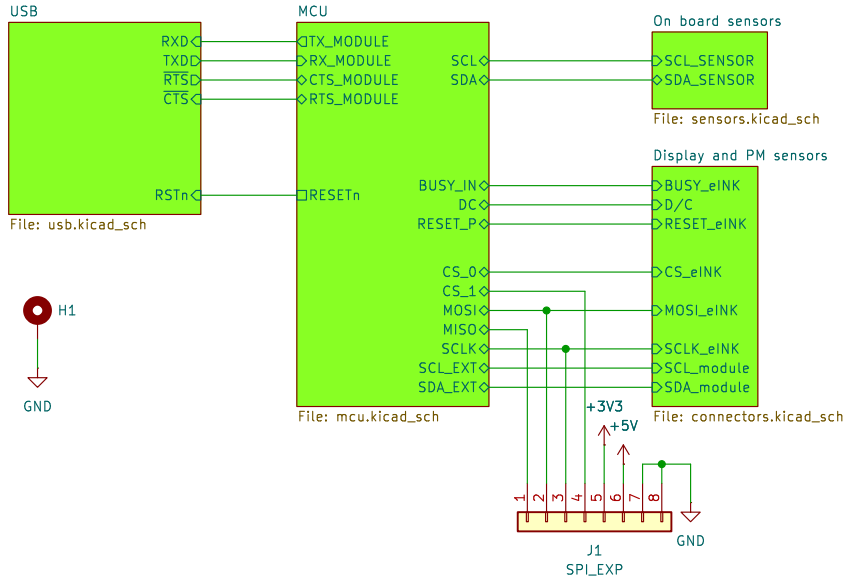

Designed by F. Salmaso
EIRO Tech

Sheet: /
File: AQI_Monitor.kicad_sch

Title: AQI Monitor

Size: A4	Date: 22/10/2025	**Rev: 1**
KiCad E.D.A. 9.0.4		Id: 1/5

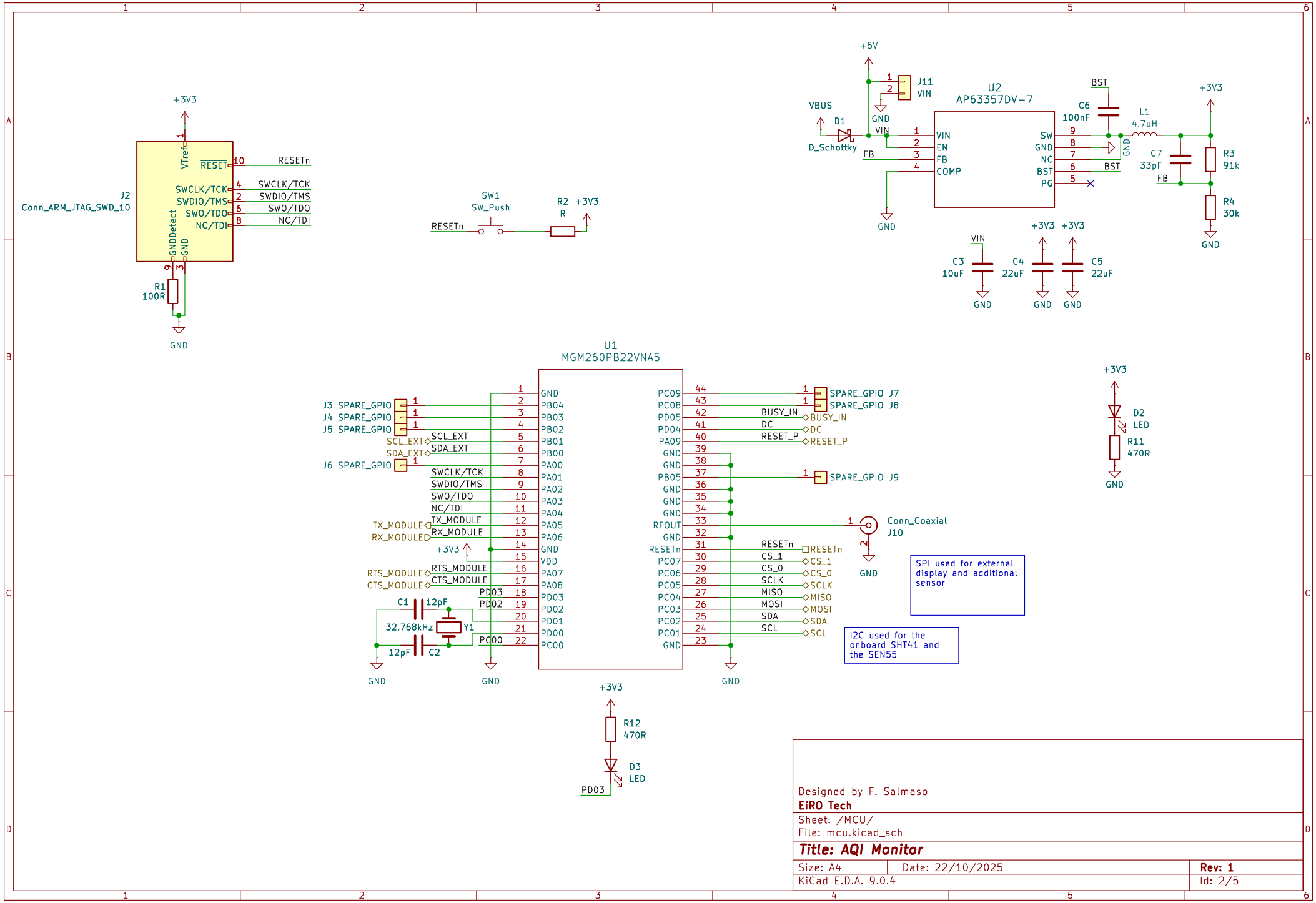

Designed by F. Salmaso
EIRO Tech

Sheet: /MCU/
File: mcu.kicad_sch

Title: AQI Monitor

Size: A4	Date: 22/10/2025	**Rev: 1**
KiCad E.D.A. 9.0.4		Id: 2/5

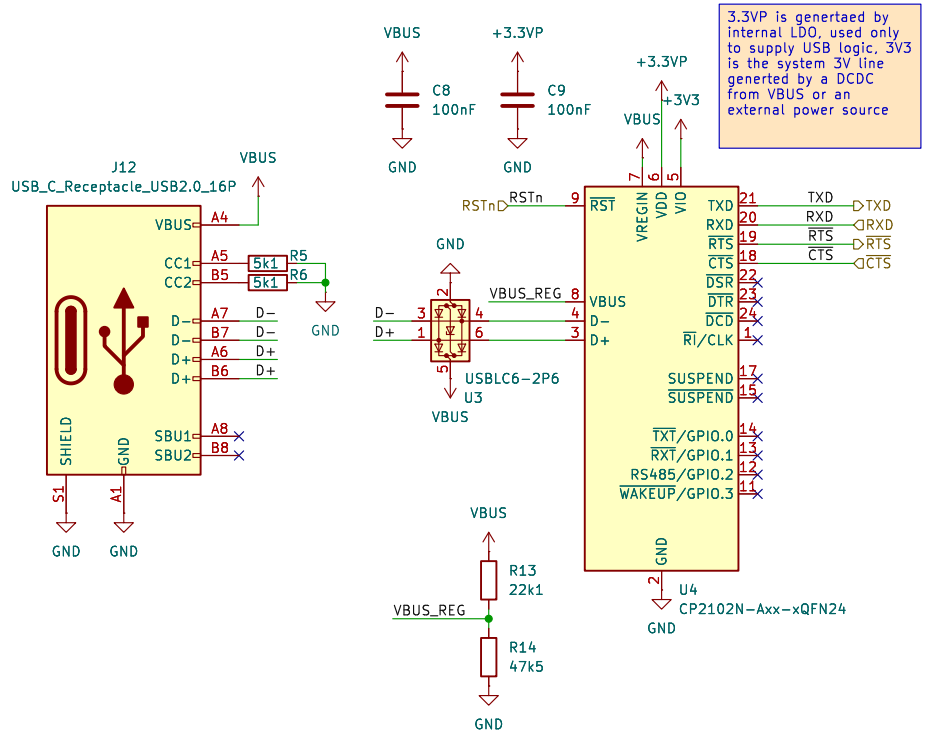

Designed by F. Salmaso

EIRO Tech

Sheet: /USB/

File: usb.kicad_sch

Title: AQI Monitor

Size: A4	Date: 22/10/2025	**Rev: 1**
KiCad E.D.A. 9.0.4		Id: 3/5

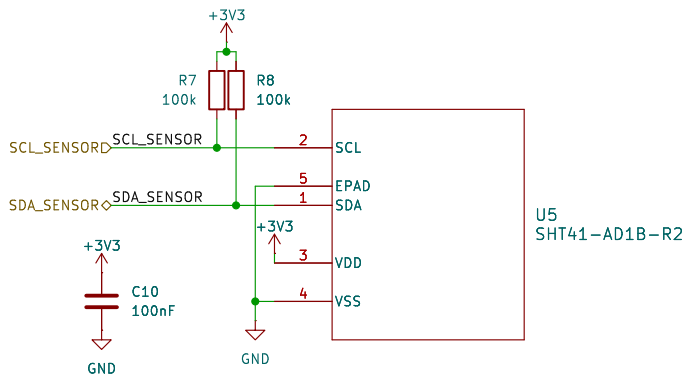

Designed by F. Salmaso
EIRO Tech

Sheet: /On board sensors/
File: sensors.kicad_sch

Title: AQI Monitor

Size: A4	Date: 22/10/2025	**Rev: 1**
KiCad E.D.A. 9.0.4		Id: 4/5

RESET of eINK has to be connected to the MCU and BUSY has to be monitored, when BUSY goes for a prolonged time, a watchdog should pull low the RESET pin od the display

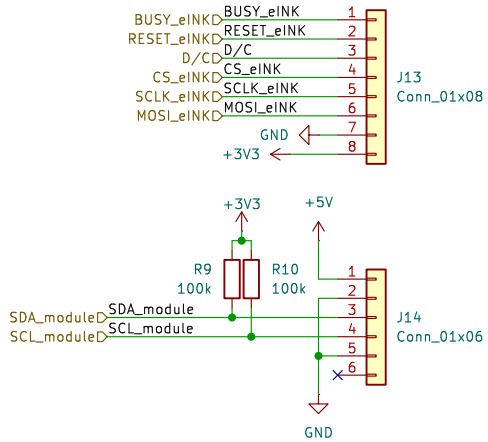

Designed by F. Salmaso
EIRO Tech

Sheet: /Display and PM sensors/
File: connectors.kicad_sch

Title: AQI Monitor

Size: A4	Date: 22/10/2025	**Rev: 1**
KiCad E.D.A. 9.0.4		Id: 5/5