deliberate polydipsia, extracellular fluid volume is normal or expanded and plasma AVP levels are reduced because serum osmolality tends to be near the lower limits of normal. Urine osmolality is also maximally dilute at 50 mosmol/L.

Central diabetes insipidus may be idiopathic in origin or secondary to a variety of conditions, including hypophysectomy, trauma, neoplastic, inflammatory, vascular, or infectious hypothalamic diseases. Idiopathic central diabetes insipidus is associated with selective destruction of the AVP-secreting neurons in the supraoptic and paraventricular nuclei and can either be inherited as an autosomal dominant trait or occur spontaneously. Nephrogenic diabetes insipidus can occur in a variety of clinical situations, as summarized in Fig. 55-4.

A plasma AVP level is recommended as the best method for distinguishing between central and nephrogenic diabetes insipidus. Assays for circulating copeptin, a peptide that is cleaved from pre-pro-AVP during axonal transport in the posterior pituitary, are also now available in many centers. A water deprivation test plus exogenous desmopressin (DDAVP) may distinguish primary polydipsia from central and nephrogenic diabetes insipidus. Measurement of hypertonic saline–stimulated plasma copeptin, if available, can substitute for water deprivation testing. **For a detailed discussion, see Chap. 393.**

Acknowledgment

Julie Lin and Brad Denker contributed to this chapter in the 19th edition and some material from that chapter has been retained here.

FURTHER READING

Emmett M et al: Approach to the patient with kidney disease, in *Brenner and Rector's The Kidney*, 10th ed, K Skorecki et al (eds). Philadelphia, W.B. Saunders & Company, 2016, pp. 754–779.

Eneanya ND et al: Reconsidering the consequences of using race to estimate kidney function. JAMA 322:113, 2019.

Köhler H et al: Acanthocyturia—a characteristic marker for glomerular bleeding. Kidney Int 40:115, 1991.

Inker LA et al: New creatinine- and cystatin C-based equations to estimate GFR without race. N Engl J Med 385:1737, 2021.

Perazella MA: The urine sediment as a biomarker of kidney disease. Am J Kidney Dis 66:748, 2015.

Weisord SD et al: Prevention and management of acute kidney injury in *Brenner and Rector's The Kidney*, 11th ed, ASL Yu et al (eds). Philadelphia, W.B. Saunders & Company, 2020, pp. 940–977.

56 Fluid and Electrolyte Disturbances

David B. Mount

SODIUM AND WATER

COMPOSITION OF BODY FLUIDS

Water is the most abundant constituent in the body, comprising ~50% of body weight in women and 60% in men. Total-body water is distributed in two major compartments: 55–75% is intracellular (intracellular fluid [ICF]), and 25–45% is extracellular (extracellular fluid [ECF]). The ECF is further subdivided into intravascular (plasma water) and extravascular (interstitial) spaces in a ratio of 1:3. Fluid movement between the intravascular and interstitial spaces occurs across the capillary wall and is determined by Starling forces, i.e., capillary hydraulic pressure and colloid osmotic pressure. The transcapillary hydraulic pressure gradient exceeds the corresponding oncotic pressure gradient, thereby favoring the movement of plasma ultrafiltrate into the extravascular space. The return of fluid into the intravascular compartment occurs via lymphatic flow.

The solute or particle concentration of a fluid is known as its osmolality, expressed as milliosmoles per kilogram of water (mOsm/kg). Water easily diffuses across most cell membranes to achieve osmotic equilibrium (ECF osmolality = ICF osmolality). Notably, the extracellular and intracellular solute compositions differ considerably owing to the activity of various transporters, channels, and ATP-driven membrane pumps. The major ECF particles are Na^+ and its accompanying anions Cl^- and HCO_3^-, whereas K^+ and organic phosphate esters (ATP, creatine phosphate, and phospholipids) are the predominant ICF osmoles. Solutes that are restricted to the ECF or the ICF determine the "tonicity" or effective osmolality of that compartment. Certain solutes, particularly urea, do not contribute to water shifts across most membranes and are thus known as *ineffective osmoles*.

Water Balance Vasopressin secretion, water ingestion, and renal water transport collaborate to maintain human body fluid osmolality between 280 and 295 mOsm/kg. Vasopressin (AVP) is synthesized in magnocellular neurons within the hypothalamus; the distal axons of these neurons project to the posterior pituitary or neurohypophysis, from which AVP is released into the circulation. A network of central "osmoreceptor" neurons, which includes the AVP-expressing magnocellular neurons themselves, sense circulating osmolality via nonselective, stretch-activated cation channels. These osmoreceptor neurons are activated or inhibited by modest increases and decreases in circulating osmolality, respectively; activation leads to AVP release and thirst.

AVP secretion is stimulated as systemic osmolality increases above a threshold level of ~285 mOsm/kg, above which there is a linear relationship between osmolality and circulating AVP **(Fig. 56-1)**. Thirst and thus water ingestion are also activated at ~285 mOsm/kg, beyond which there is an equivalent linear increase in the perceived intensity of thirst as a function of circulating osmolality. Changes in blood volume and blood pressure are also direct stimuli for AVP release and thirst, albeit with a less sensitive response profile. Of perhaps greater clinical relevance to the pathophysiology of water homeostasis, ECF volume strongly modulates the relationship between circulating osmolality and AVP release, such that hypovolemia reduces the osmotic threshold and increases the slope of the response curve to osmolality; *hypervolemia* has an opposite effect, increasing the osmotic threshold and reducing the slope of the response curve (Fig. 56-1). Notably, AVP has a half-life in the circulation of only 10–20 min; thus, changes in ECF volume and/or circulating osmolality can rapidly affect water homeostasis. In addition to volume status, a number of other "nonosmotic" stimuli have potent activating effects on

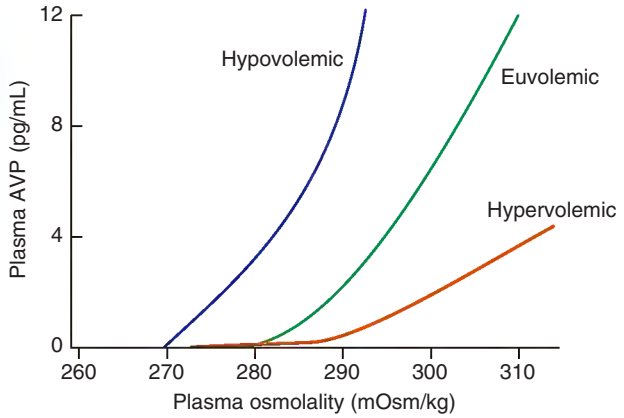

FIGURE 56-1 Circulating levels of vasopressin (AVP) in response to changes in osmolality. Plasma AVP becomes detectable in euvolemic, healthy individuals at a threshold of ~285 mOsm/kg, above which there is a linear relationship between osmolality and circulating AVP. The AVP response to osmolality is modulated strongly by volume status. The osmotic threshold is thus slightly lower in hypovolemia, with a steeper response curve; hypervolemia reduces the sensitivity of circulating AVP levels to osmolality.

osmosensitive neurons and AVP release, including nausea, intracerebral angiotensin II, serotonin, and multiple drugs.

The excretion or retention of electrolyte-free water by the kidney is modulated by circulating AVP. AVP acts on renal, V_2-type receptors in the thick ascending limb of Henle and principal cells of the collecting duct (CD), increasing intracellular levels of cyclic AMP and activating protein kinase A (PKA)–dependent phosphorylation of multiple transport proteins. The AVP- and PKA-dependent activation of Na^+-Cl^- and K^+ transport by the thick ascending limb of the loop of Henle (TALH) is a key participant in the countercurrent mechanism (Fig. 56-2). The countercurrent mechanism ultimately increases the interstitial osmolality in the inner medulla of the kidney, driving water absorption across the renal CD. However, water, salt, and solute transport by both proximal and distal nephron segments participates in the renal concentrating mechanism (Fig. 56-2). Water transport across apical and basolateral aquaporin-1 water channels in the descending thin limb of the loop of Henle is thus involved, as is passive absorption of Na^+-Cl^- by the thin ascending limb, via apical and basolateral CLC-K1 chloride channels and paracellular Na^+ transport. Renal urea transport in turn plays important roles in the generation of the medullary osmotic gradient and the ability to excrete solute-free water under conditions of both high and low protein intake (Fig. 56-2).

AVP-induced, PKA-dependent phosphorylation of the aquaporin-2 water channel in principal cells stimulates the insertion of active water channels into the lumen of the CD, resulting in transepithelial water absorption down the medullary osmotic gradient (Fig. 56-3). Under "antidiuretic" conditions, with increased circulating AVP, the kidney reabsorbs water filtered by the glomerulus, equilibrating the osmolality across the CD epithelium to excrete a hypertonic, "concentrated" urine (osmolality of up to 1200 mOsm/kg). In the absence of circulating AVP, insertion of aquaporin-2 channels and water absorption across the CD is essentially abolished, resulting in secretion of a hypotonic, dilute urine (osmolality as low as 30–50 mOsm/kg). Abnormalities in this "final common pathway" are involved in most disorders of water homeostasis, e.g., a reduced or absent insertion of active aquaporin-2 water channels into the membrane of principal cells in diabetes insipidus (DI).

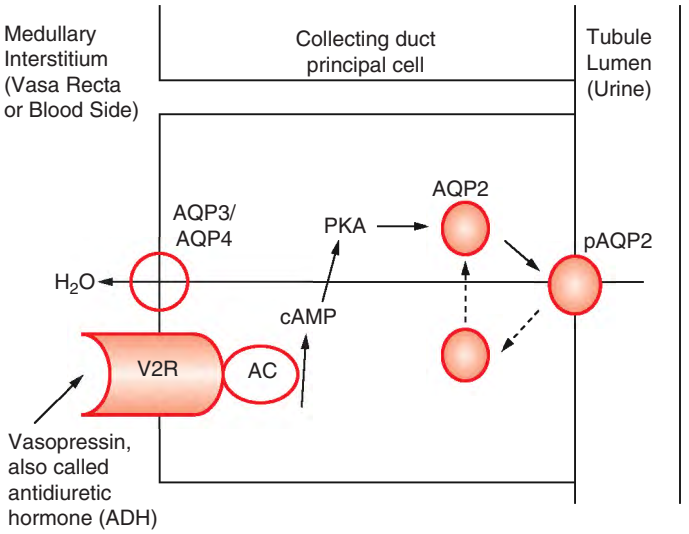

FIGURE 56-3 Vasopressin and the regulation of water permeability in the renal collecting duct. Vasopressin binds to the type 2 vasopressin receptor (V2R) on the basolateral membrane of principal cells, activates adenylyl cyclase (AC), increases intracellular cyclic adenosine monophosphatase (cAMP), and stimulates protein kinase A (PKA) activity. Cytoplasmic vesicles carrying aquaporin-2 (AQP) water channel proteins are inserted into the luminal membrane in response to vasopressin, thereby increasing the water permeability of this membrane. When vasopressin stimulation ends, water channels are retrieved by an endocytic process and water permeability returns to its low basal rate. The AQP3 and AQP4 water channels are expressed on the basolateral membrane and complete the transcellular pathway for water reabsorption. pAQP2, phosphorylated aquaporin-2. *(From Annals of Internal Medicine JM Sands, DG Bichet: Nephrogenic diabetes insipidus. 144:186, 2006. Copyright © 2006 American College of Physicians. All Rights Reserved. Reprinted with the permission of American College of Physicians, Inc.)*

Maintenance of Arterial Circulatory Integrity Sodium is actively pumped out of cells by the Na^+/K^+-ATPase membrane pump. In consequence, 85–90% of body Na^+ is extracellular, and the ECF volume (ECFV) is a function of total-body Na^+ content. Arterial perfusion and circulatory integrity are, in turn, determined by renal Na^+ retention or excretion, in addition to the modulation of systemic arterial resistance. Within the kidney, Na^+ is filtered by the glomeruli and then sequentially reabsorbed by the renal tubules. The Na^+ cation is typically reabsorbed with the chloride anion (Cl^-), and thus, chloride homeostasis also affects the ECFV. On a quantitative level, at a glomerular filtration rate (GFR) of 180 L/d and serum Na^+ of ~140 m*M*, the kidney filters some 25,200 mmol/d of Na^+. This is equivalent to ~1.5 kg of salt, which would occupy roughly 10 times the extracellular space; 99.6% of filtered Na^+-Cl^- must be reabsorbed to excrete 100 m*M* per day. Minute changes in renal Na^+-Cl^- excretion will thus have significant effects on the ECFV, leading to edema syndromes or hypovolemia.

Approximately two-thirds of filtered Na^+-Cl^- is reabsorbed by the renal proximal tubule, via both paracellular and transcellular mechanisms. The TALH subsequently reabsorbs another 25–30% of filtered Na^+-Cl^- via the apical, furosemide-sensitive Na^+-K^+-$2Cl^-$ cotransporter. The adjacent aldosterone-sensitive distal nephron, comprising the distal convoluted tubule (DCT), connecting tubule (CNT), and CD, accomplishes the "fine-tuning" of renal Na^+-Cl^- excretion. The thiazide-sensitive apical Na^+-Cl^- cotransporter (NCC) reabsorbs 5–10% of filtered Na^+-Cl^- in the DCT. Principal cells in the CNT and CD reabsorb Na^+ via electrogenic, amiloride-sensitive epithelial Na^+ channels (ENaC); Cl^- ions are primarily reabsorbed by adjacent intercalated cells, via apical Cl^- exchange (Cl^--OH^- and Cl^--HCO_3^- exchange, mediated by the SLC26A4 anion exchanger) (Fig. 56-4).

Renal tubular reabsorption of filtered Na^+-Cl^- is regulated by multiple circulating and paracrine hormones, in addition to the activity of renal nerves. Angiotensin II activates proximal Na^+-Cl^- reabsorption, as do adrenergic receptors under the influence of renal sympathetic

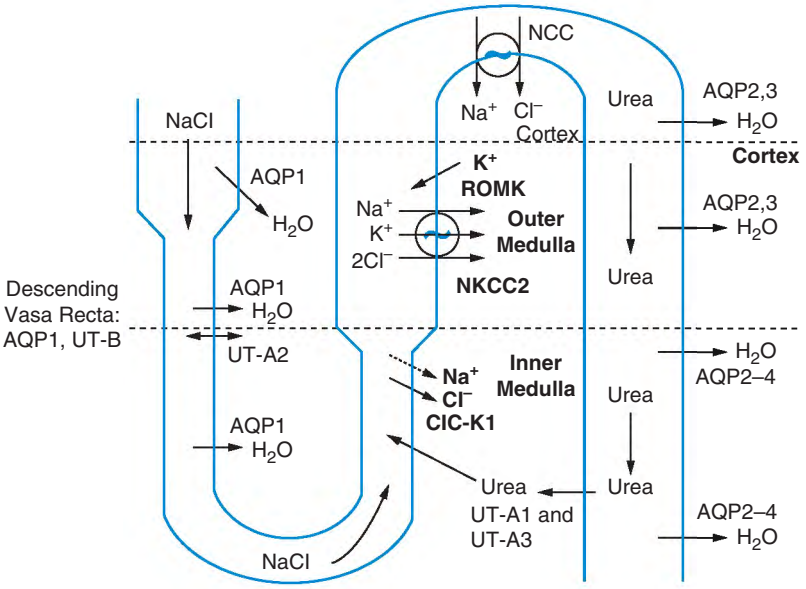

FIGURE 56-2 The renal concentrating mechanism. Water, salt, and solute transport by both proximal and distal nephron segments participates in the renal concentrating mechanism (see text for details). Diagram showing the location of the major transport proteins involved; a loop of Henle is depicted on the *left,* collecting duct on the *right.* AQP, aquaporin; CLC-K1, chloride channel; NKCC2, Na-K-2Cl cotransporter; ROMK, renal outer medullary K^+ channel; UT, urea transporter. *(Reproduced with permission from JM Sands: Molecular approaches to urea transporters. J Am Soc Nephro 13(11):2795, 2002.)*

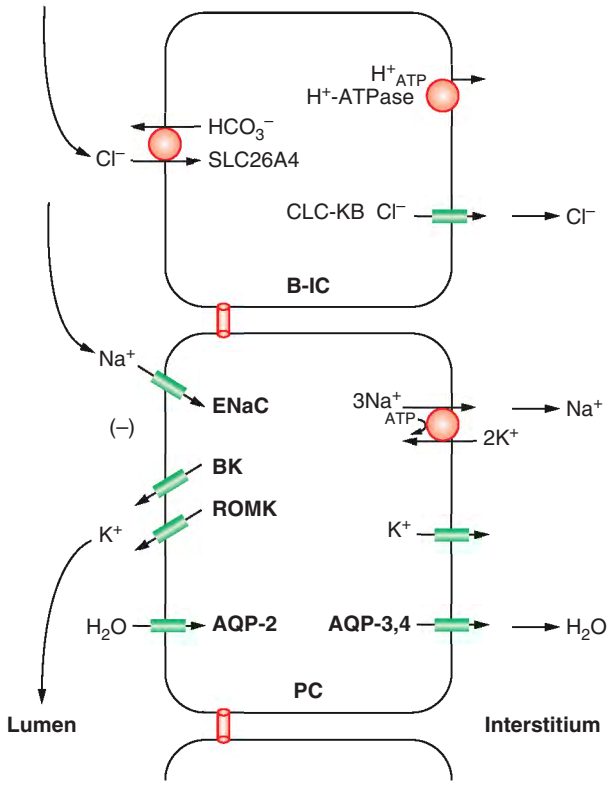

FIGURE 56-4 Sodium, water, and potassium transport in principal cells (PC) and adjacent α-intercalated cells (B-IC). The absorption of Na^+ via the amiloride-sensitive epithelial sodium channel (ENaC) generates a lumen-negative potential difference, which drives K^+ excretion through the apical secretory K^+ channel ROMK (renal outer medullary K^+ channel) and/or the flow-dependent BK channel. Transepithelial Cl^- transport occurs in adjacent β-intercalated cells, via apical Cl^--HCO_3^- and Cl^--OH^- exchange (SLC26A4 anion exchanger, also known as pendrin) basolateral CLC chloride channels. Water is absorbed down the osmotic gradient by principal cells, through the apical aquaporin-2 (AQP-2) and basolateral aquaporin-3 and aquaporin-4 (Fig. 56-3).

innervation; locally generated dopamine, in contrast, has a *natriuretic* effect. Aldosterone primarily activates Na^+-Cl^- reabsorption within the aldosterone-sensitive distal nephron. In particular, aldosterone activates the ENaC channel in principal cells, inducing Na^+ absorption and promoting K^+ excretion (Fig. 56-4).

Circulatory integrity is critical for the perfusion and function of vital organs. "Underfilling" of the arterial circulation is sensed by ventricular and vascular pressure receptors, resulting in a neurohumoral activation (increased sympathetic tone, activation of the renin-angiotensin-aldosterone axis, and increased circulating AVP) that synergistically increases renal Na^+-Cl^- reabsorption, vascular resistance, and renal water reabsorption. This occurs in the context of decreased cardiac output, as occurs in hypovolemic states, low-output cardiac failure, decreased oncotic pressure, and/or increased capillary permeability. Alternatively, excessive arterial vasodilation results in *relative* arterial underfilling, leading to neurohumoral activation in the defense of tissue perfusion. These physiologic responses play important roles in many of the disorders discussed in this chapter. In particular, it is important to appreciate that AVP functions in the defense of circulatory integrity, inducing vasoconstriction, increasing sympathetic nervous system tone, increasing renal retention of both water and Na^+-Cl^-, and modulating the arterial baroreceptor reflex. Most of these responses involve activation of systemic V_{1A} AVP receptors, but concomitant activation of V_2 receptors in the kidney can result in renal water retention and hyponatremia.

HYPOVOLEMIA

Etiology True volume depletion, or hypovolemia, generally refers to a state of combined salt and water loss, leading to contraction of the ECFV. The loss of salt and water may be renal or nonrenal in origin.

RENAL CAUSES Excessive urinary Na^+-Cl^- and water loss is a feature of several conditions. A high filtered load of endogenous solutes, such as glucose and urea, can impair tubular reabsorption of Na^+-Cl^- and water, leading to an osmotic diuresis. Exogenous mannitol, often used to decrease intracerebral pressure, is filtered by glomeruli but not reabsorbed by the proximal tubule, thus causing an osmotic diuresis. Pharmacologic diuretics selectively impair Na^+-Cl^- reabsorption at specific sites along the nephron, leading to increased urinary Na^+-Cl^- excretion. Other drugs can induce natriuresis as a side effect. For example, acetazolamide can inhibit proximal tubular Na^+-Cl^- absorption via its inhibition of carbonic anhydrase; other drugs, such as the antibiotics trimethoprim (TMP) and pentamidine, inhibit distal tubular Na^+ reabsorption through the amiloride-sensitive ENaC channel, leading to urinary Na^+-Cl^- loss. Hereditary defects in renal transport proteins are also associated with reduced reabsorption of filtered Na^+-Cl^- and/or water. Alternatively, mineralocorticoid deficiency, mineralocorticoid resistance, or inhibition of the mineralocorticoid receptor (MLR) can reduce Na^+-Cl^- reabsorption by the aldosterone-sensitive distal nephron. Finally, tubulointerstitial injury, as occurs in interstitial nephritis, acute tubular injury, or obstructive uropathy, can reduce distal tubular Na^+-Cl^- and/or water absorption.

Excessive excretion of free water, i.e., water without electrolytes, can also lead to hypovolemia. However, the effect on ECFV is usually less marked, given that two-thirds of the water volume is lost from the ICF. Excessive renal water excretion occurs in the setting of decreased circulating AVP or renal resistance to AVP (central and nephrogenic DI, respectively).

EXTRARENAL CAUSES Nonrenal causes of hypovolemia include fluid loss from the gastrointestinal tract, skin, and respiratory system. Accumulations of fluid within specific tissue compartments, typically the interstitium, peritoneum, or gastrointestinal tract, can also cause hypovolemia.

Approximately 9 L of fluid enter the gastrointestinal tract daily, 2 L by ingestion and 7 L by secretion; almost 98% of this volume is absorbed, such that daily fecal fluid loss is only 100–200 mL. Impaired gastrointestinal reabsorption or enhanced secretion of fluid can cause hypovolemia. Because gastric secretions have a low pH (high H^+ concentration), whereas biliary, pancreatic, and intestinal secretions are alkaline (high HCO_3^- concentration), vomiting and diarrhea are often accompanied by metabolic alkalosis and acidosis, respectively.

Evaporation of water from the skin and respiratory tract (so-called "insensible losses") constitutes the major route for loss of solute-free water, which is typically 500–650 mL/d in healthy adults. This evaporative loss can increase during febrile illness or prolonged heat exposure. Hyperventilation can also increase insensible losses via the respiratory tract, particularly in ventilated patients; the humidity of inspired air is another determining factor. In addition, increased exertion and/or ambient temperature will increase insensible losses via sweat, which is hypotonic to plasma. Profuse sweating without adequate repletion of water and Na^+-Cl^- can thus lead to both hypovolemia and hypertonicity. Alternatively, replacement of these insensible losses with a surfeit of free water, without adequate replacement of electrolytes, may lead to hypovolemic hyponatremia.

Excessive fluid accumulation in interstitial and/or peritoneal spaces can also cause intravascular hypovolemia. Increases in vascular permeability and/or a reduction in oncotic pressure (hypoalbuminemia) alter Starling forces, resulting in excessive "third spacing" of the ECFV. This occurs in sepsis syndrome, burns, pancreatitis, nutritional hypoalbuminemia, and peritonitis. Alternatively, distributive hypovolemia can occur due to accumulation of fluid within specific compartments, for example, within the bowel lumen in gastrointestinal obstruction or ileus. Hypovolemia can also occur after extracorporeal hemorrhage or after significant hemorrhage into an expandable space, for example, the retroperitoneum.

Diagnostic Evaluation A careful history will usually determine the etiologic cause of hypovolemia. Symptoms of hypovolemia are nonspecific and include fatigue, weakness, thirst, and postural dizziness; more severe symptoms and signs include oliguria, cyanosis, abdominal

and chest pain, and confusion or obtundation. Associated electrolyte disorders may cause additional symptoms, for example, muscle weakness in patients with hypokalemia. On examination, diminished skin turgor and dry oral mucous membranes are less than ideal markers of a decreased ECFV in adult patients; more reliable signs of hypovolemia include a decreased jugular venous pressure (JVP), orthostatic tachycardia (an increase of >15–20 beats/min upon standing), and orthostatic hypotension (a >10–20 mmHg drop in blood pressure on standing). More severe fluid loss leads to hypovolemic shock, with hypotension, tachycardia, peripheral vasoconstriction, and peripheral hypoperfusion; these patients may exhibit peripheral cyanosis, cold extremities, oliguria, and altered mental status.

Routine chemistries may reveal an increase in blood urea nitrogen (BUN) and creatinine, reflective of a decrease in GFR. Creatinine is the more dependable measure of GFR, because BUN levels may be influenced by an increase in tubular reabsorption ("prerenal azotemia"), an increase in urea generation in catabolic states, hyperalimentation, or gastrointestinal bleeding, and/or a decreased urea generation in decreased protein intake. In hypovolemic shock, liver function tests and cardiac biomarkers may show evidence of hepatic and cardiac ischemia, respectively. Routine chemistries and/or blood gases may reveal evidence of acid-base disorders. For example, bicarbonate loss due to diarrheal illness is a very common cause of metabolic acidosis; alternatively, patients with severe hypovolemic shock may develop lactic acidosis with an elevated anion gap.

The neurohumoral response to hypovolemia stimulates an increase in renal tubular Na^+ and water reabsorption. Therefore, the urine Na^+ concentration is typically <20 m*M* in nonrenal causes of hypovolemia, with a urine osmolality of >450 mOsm/kg. The reduction in both GFR and distal tubular Na^+ delivery may cause a defect in renal potassium excretion, with an increase in plasma K^+ concentration. Of note, patients with hypovolemia and a hypochloremic alkalosis due to vomiting, diarrhea, or diuretics will typically have a urine Na^+ concentration >20 m*M* and urine pH of >7.0, due to the increase in filtered HCO_3^-; the urine Cl^- concentration in this setting is a more accurate indicator of volume status, with a level <25 m*M* suggestive of hypovolemia. The urine Na^+ concentration is often >20 m*M* in patients with *renal* causes of hypovolemia, such as acute tubular necrosis; similarly, patients with DI will have an inappropriately dilute urine.

TREATMENT

Hypovolemia

The therapeutic goals in hypovolemia are to restore normovolemia and replace ongoing fluid losses. Mild hypovolemia can usually be treated with oral hydration and resumption of a normal maintenance diet. More severe hypovolemia requires intravenous hydration, tailoring the choice of solution to the underlying pathophysiology. Isotonic, "normal" saline (0.9% NaCl, 154 m*M* Na^+) is the most appropriate resuscitation fluid for normonatremic or hyponatremic patients with severe hypovolemia; colloid solutions such as intravenous albumin are not demonstrably superior for this purpose. Hypernatremic patients should receive a hypotonic solution, 5% dextrose if there has only been water loss (as in DI), or hypotonic saline (1/2 or 1/4 normal saline) if there has been water and Na^+-Cl^- loss; changes in free water administration should be made if necessary, based on frequent measuring of serum chemistries. Patients with bicarbonate loss and metabolic acidosis, as occur frequently in diarrhea, should receive intravenous bicarbonate, either an isotonic solution (150 meq of Na^+-HCO_3^- in 5% dextrose) or a more hypotonic bicarbonate solution in dextrose or dilute saline. Patients with severe hemorrhage or anemia should receive red cell transfusions, without increasing the hematocrit beyond 35%.

SODIUM DISORDERS

Disorders of serum Na^+ concentration are caused by abnormalities in water homeostasis, leading to changes in the relative ratio of Na^+ to body water. Water intake and circulating AVP constitute the two key effectors in the defense of serum osmolality; defects in one or both of these two defense mechanisms cause most cases of hyponatremia and hypernatremia. In contrast, abnormalities in sodium homeostasis per se lead to a deficit or surplus of whole-body Na^+-Cl^- content, a key determinant of the ECFV and circulatory integrity. Notably, volume status also modulates the release of AVP by the posterior pituitary, such that hypovolemia is associated with higher circulating levels of the hormone at each level of serum osmolality. Similarly, in "hypervolemic" causes of arterial underfilling, e.g., heart failure and cirrhosis, the associated neurohumoral activation encompasses an increase in circulating AVP, leading to water retention and hyponatremia. Therefore, a key concept in sodium disorders is that the absolute plasma Na^+ concentration tells one nothing about the volume status of a given patient, which furthermore must be taken into account in the diagnostic and therapeutic approach.

HYPONATREMIA

Hyponatremia, which is defined as a plasma Na^+ concentration <135 m*M*, is a very common disorder, occurring in up to 22% of hospitalized patients. This disorder is almost always the result of an increase in circulating AVP and/or increased renal sensitivity to AVP, combined with an intake of free water; a notable exception is hyponatremia due to low solute intake (see below). The underlying pathophysiology for the exaggerated or "inappropriate" AVP response differs in patients with hyponatremia as a function of their ECFV. Hyponatremia is thus subdivided diagnostically into three groups, depending on clinical history and volume status, i.e., "hypovolemic," "euvolemic," and "hypervolemic" **(Fig. 56-5)**.

Hypovolemic Hyponatremia Hypovolemia causes a marked neurohumoral activation, increasing circulating levels of AVP. The increase in circulating AVP helps preserve blood pressure via vascular and baroreceptor V_{1A} receptors and increases water reabsorption via renal V_2 receptors; activation of V_2 receptors can lead to hyponatremia in the setting of increased free water intake. Nonrenal causes of hypovolemic hyponatremia include gastrointestinal loss (e.g., vomiting, diarrhea, tube drainage) and insensible loss (sweating, burns) of Na^+-Cl^- and water, in the absence of adequate oral replacement; urine Na^+ concentration is typically <20 m*M*. Notably, these patients may be clinically classified as euvolemic, with only the reduced urinary Na^+ concentration to indicate the cause of their hyponatremia. Indeed, a urine Na^+ concentration <20 m*M*, in the absence of a cause of hypervolemic hyponatremia, predicts a rapid increase in plasma Na^+ concentration in response to intravenous normal saline; saline therapy thus induces a water diuresis in this setting, as circulating AVP levels plummet.

The *renal* causes of hypovolemic hyponatremia share an inappropriate loss of Na^+-Cl^- in the urine, leading to volume depletion and an increase in circulating AVP; urine Na^+ concentration is typically >20 m*M* (Fig. 56-5). A deficiency in circulating aldosterone and/or its renal effects can lead to hyponatremia in primary adrenal insufficiency and other causes of hypoaldosteronism; hyperkalemia and hyponatremia in a hypotensive and/or hypovolemic patient with high urine Na^+ concentration (much greater than 20 m*M*) should strongly suggest this diagnosis. Salt-losing nephropathies may lead to hyponatremia when sodium intake is reduced, due to impaired renal tubular function; typical causes include reflux nephropathy, interstitial nephropathies, postobstructive uropathy, medullary cystic disease, and the recovery phase of acute tubular necrosis. Thiazide diuretics cause hyponatremia via a number of mechanisms, including polydipsia and diuretic-induced volume depletion; presentations can mimic the syndrome of inappropriate antidiuresis (SIAD). Notably, thiazides do not inhibit the renal concentrating mechanism, such that circulating AVP retains a full effect on renal water retention. In contrast, loop diuretics, which are less frequently associated with hyponatremia, inhibit Na^+-Cl^- and K^+ absorption by the TALH, blunting the countercurrent mechanism and reducing the ability to concentrate the urine. Increased excretion of an osmotically active nonreabsorbable or poorly reabsorbable solute can also lead to volume depletion and hyponatremia; important causes include glycosuria, ketonuria (e.g., in starvation or in diabetic

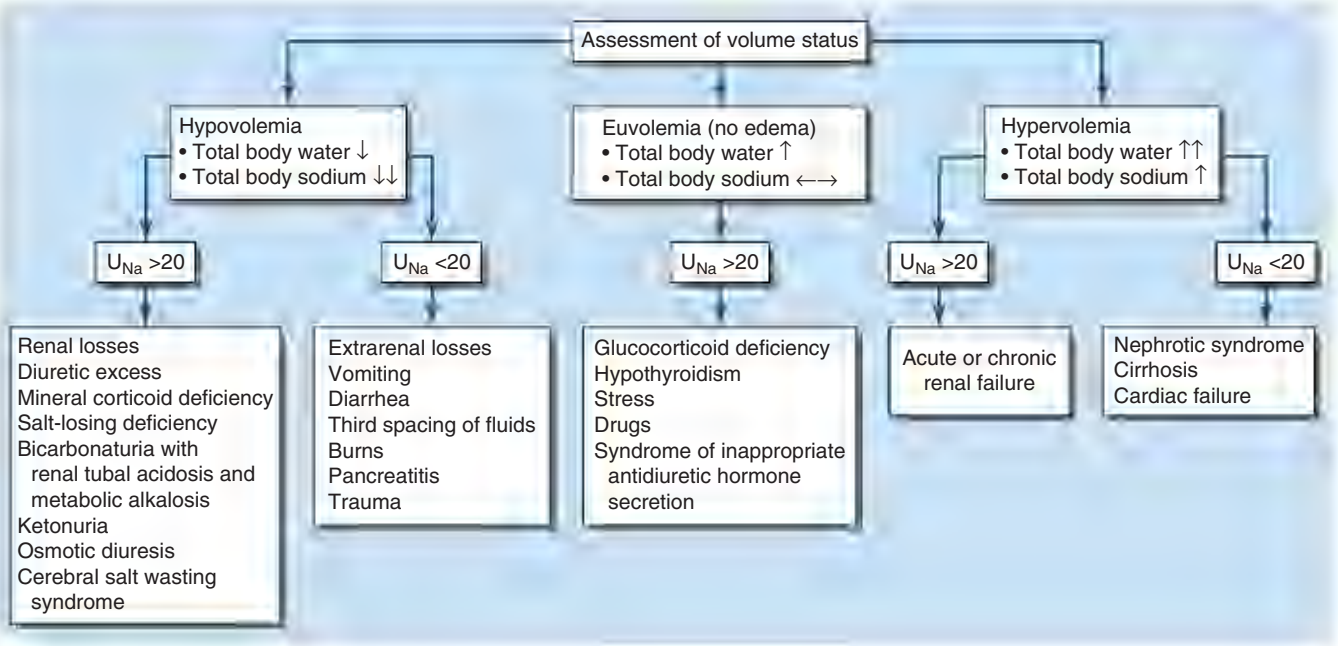

FIGURE 56-5 The diagnostic approach to hyponatremia. *(Reproduced with permission from S Kumar, T Berl: Diseases of water metabolism, in RW Schrier [ed], Atlas of Diseases of the Kidney, Philadelphia, Current Medicine, Inc, 1999.)*

or alcoholic ketoacidosis), and bicarbonaturia (e.g., in renal tubular acidosis or metabolic alkalosis, where the associated bicarbonaturia leads to loss of Na^+).

Finally, the syndrome of "cerebral salt wasting" is a rare cause of hypovolemic hyponatremia, encompassing hyponatremia with clinical hypovolemia and inappropriate natriuresis in association with intracranial disease; associated disorders include subarachnoid hemorrhage, traumatic brain injury, craniotomy, encephalitis, and meningitis. Distinction from the more common syndrome SIAD is critical because cerebral salt wasting will typically respond to aggressive Na^+-Cl^- repletion.

Hypervolemic Hyponatremia Patients with hypervolemic hyponatremia develop an increase in total-body Na^+-Cl^- that is accompanied by a proportionately *greater* increase in total-body water, leading to a reduced plasma Na^+ concentration. As in hypovolemic hyponatremia, the causative disorders can be separated by the effect on urine Na^+ concentration, with acute or chronic renal failure uniquely associated with an increase in urine Na^+ concentration (Fig. 56-5). The pathophysiology of hyponatremia in the sodium-avid edematous disorders (congestive heart failure [CHF], cirrhosis, and nephrotic syndrome) is similar to that in hypovolemic hyponatremia, except that arterial filling and circulatory integrity is decreased due to the specific etiologic factors (e.g., cardiac dysfunction in CHF, peripheral vasodilation in cirrhosis). Urine Na^+ concentration is typically very low, i.e., <10 m*M*, even after hydration with normal saline; this Na^+-avid state may be obscured by diuretic therapy. The degree of hyponatremia provides an indirect index of the associated neurohumoral activation and is an important prognostic indicator in hypervolemic hyponatremia.

Euvolemic Hyponatremia Euvolemic hyponatremia can occur in moderate to severe hypothyroidism, with correction after achieving a euthyroid state. Severe hyponatremia can also be a consequence of secondary adrenal insufficiency due to pituitary disease; whereas the deficit in circulating aldosterone in primary adrenal insufficiency causes *hypovolemic* hyponatremia, the predominant glucocorticoid deficiency in secondary adrenal failure is associated with *euvolemic* hyponatremia. Glucocorticoids exert a negative feedback on AVP release by the posterior pituitary such that hydrocortisone replacement in these patients can rapidly normalize the AVP response to osmolality, reducing circulating AVP.

SIAD is the most frequent cause of euvolemic hyponatremia (Table 56-1). The generation of hyponatremia in SIAD requires an intake of free water, with persistent intake at serum osmolalities that are lower than the usual threshold for thirst; as one would expect, the osmotic threshold and osmotic response curves for the sensation of thirst are shifted downward in patients with SIAD. Four distinct patterns of AVP secretion have been recognized in patients with SIAD, independent for the most part of the underlying cause. Unregulated, erratic AVP secretion is seen in about a third of patients, with no obvious correlation between serum osmolality and circulating AVP levels. Other patients fail to suppress AVP secretion at lower serum osmolalities, with a normal response curve to hyperosmolar conditions; others have a "reset osmostat," with a lower threshold osmolality and a left-shifted osmotic response curve. Finally, the fourth subset of patients have essentially no detectable circulating AVP, suggesting either a gain in function in renal water reabsorption or a circulating antidiuretic substance that is distinct from AVP. Gain-in-function mutations of a single specific residue in the V_2 AVP receptor have been described in some of these patients, leading to constitutive activation of the receptor in the absence of AVP and "nephrogenic" SIAD.

Strictly speaking, patients with SIAD are not euvolemic but are subclinically volume-expanded, due to AVP-induced water and Na^+-Cl^- retention; "AVP escape" mechanisms invoked by sustained increases in AVP serve to limit distal renal tubular transport, preserving a modestly hypervolemic steady state. Serum uric acid is often low (<4 mg/dL) in patients with SIAD, consistent with suppressed proximal tubular transport in the setting of increased distal tubular Na^+-Cl^- and water transport; in contrast, patients with hypovolemic hyponatremia will often be hyperuricemic due to a shared activation of proximal tubular Na^+-Cl^- and urate transport.

Common causes of SIAD include pulmonary disease (e.g., pneumonia, tuberculosis, pleural effusion) and central nervous system (CNS) diseases (e.g., tumor, subarachnoid hemorrhage, meningitis). SIAD also occurs with malignancies, most commonly with small-cell lung carcinoma (75% of malignancy-associated SIAD); ~10% of patients with this tumor will have a plasma Na^+ concentration of <130 m*M* at presentation. SIAD is also a frequent complication of certain drugs, most commonly the selective serotonin reuptake inhibitors (SSRIs). Other drugs can potentiate the renal effect of AVP, without exerting direct effects on circulating AVP levels (Table 56-1).

Low Solute Intake and Hyponatremia Hyponatremia can occasionally occur in patients with a very low intake of dietary solutes. Classically, this occurs in alcoholics whose sole nutrient is beer, hence

TABLE 56-1 Causes of the Syndrome of Inappropriate Antidiuresis (SIAD)

MALIGNANT DISEASES	PULMONARY DISORDERS	DISORDERS OF THE CENTRAL NERVOUS SYSTEM	DRUGS	OTHER CAUSES
Carcinoma	Infections	Infection	Drugs that stimulate release of AVP or enhance its action	Hereditary (gain-of-function mutations in the vasopressin V_2 receptor)
Lung	Bacterial pneumonia	Encephalitis	Chlorpropamide	Idiopathic
Small cell	Viral pneumonia	Meningitis	SSRIs	Transient
Mesothelioma	Pulmonary abscess	Brain abscess	Tricyclic antidepressants	Endurance exercise
Oropharynx	Tuberculosis	Rocky Mountain spotted fever	Clofibrate	General anesthesia
Gastrointestinal tract	Aspergillosis	AIDS	Carbamazepine	Nausea
Stomach	Asthma	Bleeding and masses	Vincristine	Pain
Duodenum	Cystic fibrosis	Subdural hematoma	Nicotine	Stress
Pancreas	Respiratory failure associated with positive-pressure breathing	Subarachnoid hemorrhage	Narcotics	
Genitourinary tract		Cerebrovascular accident	Antipsychotic drugs	
Ureter		Brain tumors	Ifosfamide	
Bladder		Head trauma	Cyclophosphamide	
Prostate		Hydrocephalus	Nonsteroidal anti-inflammatory drugs	
Endometrium		Cavernous sinus thrombosis	MDMA ("Ecstasy", "Molly")	
Endocrine thymoma		Other	AVP analogues	
Lymphomas		Multiple sclerosis	Desmopressin	
Sarcomas		Guillain-Barré syndrome	Oxytocin	
Ewing's sarcoma		Shy-Drager syndrome	Vasopressin	
		Delirium tremens		
		Acute intermittent porphyria		

Abbreviations: AVP, vasopressin; MDMA; 3,4-methylenedioxymethamphetamine; SSRI, selective serotonin reuptake inhibitor.

Source: From DH Ellison, T Berl: The syndrome of inappropriate antidiuresis. N Engl J Med 356:2064, 2007. Copyright © 2007 Massachusetts Medical Society. Reprinted with permission from Massachusetts Medical Society.

the diagnostic label of *beer potomania*; beer is very low in protein and salt content, containing only 1–2 m*M* of Na^+. The syndrome has also been described in nonalcoholic patients with highly restricted solute intake due to nutrient-restricted diets, e.g., extreme vegetarian diets. Patients with hyponatremia due to low solute intake typically present with a very low urine osmolality (<100–200 mOsm/kg) with a urine Na^+ concentration that is <10–20 m*M*. The fundamental abnormality is the inadequate dietary intake of solutes; the reduced urinary solute excretion limits water excretion such that hyponatremia ensues after relatively modest polydipsia. AVP levels have not been reported in patients with beer potomania but are expected to be suppressed or rapidly suppressible with saline hydration; this fits with the overly rapid correction in plasma Na^+ concentration that can be seen with saline hydration. Resumption of a normal diet and/or saline hydration will also correct the causative deficit in urinary solute excretion, such that patients with beer potomania typically correct their plasma Na^+ concentration promptly after admission to the hospital.

Clinical Features of Hyponatremia Hyponatremia induces generalized cellular swelling, a consequence of water movement down the osmotic gradient from the hypotonic ECF to the ICF. The symptoms of hyponatremia are primarily neurologic, reflecting the development of cerebral edema within a rigid skull. The initial CNS response to acute hyponatremia is an increase in interstitial pressure, leading to shunting of ECF and solutes from the interstitial space into the cerebrospinal fluid and then on into the systemic circulation. This is accompanied by an efflux of the major intracellular ions, Na^+, K^+, and Cl^-, from brain cells. Acute hyponatremic encephalopathy ensues when these volume regulatory mechanisms are overwhelmed by a rapid decrease in tonicity, resulting in acute cerebral edema. Early symptoms can include nausea, headache, and vomiting. However, severe complications can rapidly evolve, including seizure activity, brainstem herniation, coma, and death. A key complication of acute hyponatremia is normocapneic or hypercapneic respiratory failure; the associated hypoxia may amplify the neurologic injury. Normocapneic respiratory failure in this setting is typically due to noncardiogenic, "neurogenic" pulmonary edema, with a normal pulmonary capillary wedge pressure.

Acute symptomatic hyponatremia is a medical emergency, occurring in a number of specific settings (Table 56-2). Women, particularly before menopause, are much more likely than men to develop encephalopathy and severe neurologic sequelae. Acute hyponatremia often has an iatrogenic component, e.g., when hypotonic intravenous fluids are given to postoperative patients with an increase in circulating AVP. Exercise-associated hyponatremia, an important clinical issue at marathons and other endurance events, has similarly been linked to both a "nonosmotic" increase in circulating AVP and excessive free water intake. The recreational drugs Molly and Ecstasy, which share an active ingredient (MDMA, 3,4-methylenedioxymethamphetamine), cause a rapid and potent induction of both thirst and AVP, leading to severe acute hyponatremia.

Persistent, chronic hyponatremia results in an efflux of organic osmolytes (creatine, betaine, glutamate, myoinositol, and taurine) from brain cells; this response reduces intracellular osmolality and the osmotic gradient favoring water entry. This reduction in intracellular osmolytes is largely complete within 48 h, the time period that clinically defines chronic hyponatremia; this temporal definition has considerable relevance for the treatment of hyponatremia (see below). The cellular response to chronic hyponatremia does not fully protect patients from symptoms, which can include vomiting, nausea, confusion, and seizures, usually at plasma Na^+ concentration <125 m*M*. Even patients who are judged "asymptomatic" can manifest subtle gait and cognitive defects that reverse with correction of hyponatremia;

TABLE 56-2 Causes of Acute Hyponatremia

Iatrogenic
Postoperative: premenopausal women
Hypotonic fluids with cause of ↑ vasopressin
Glycine irrigation: TURP, uterine surgery
Colonoscopy preparation
Recent institution of thiazides
Polydipsia
MDMA ("Ecstasy," "Molly") ingestion
Exercise induced
Multifactorial, e.g., thiazide and polydipsia

Abbreviations: MDMA, 3,4-methylenedioxymethamphetamine; TURP, transurethral resection of the prostate.

notably, chronic "asymptomatic" hyponatremia increases the risk of falls. Chronic hyponatremia also increases the risk of bony fractures owing to the associated neurologic dysfunction and to a hyponatremia-associated reduction in bone density. Therefore, every attempt should be made to safely correct the plasma Na^+ concentration in patients with chronic hyponatremia, even in the absence of overt symptoms (see the section on treatment of hyponatremia below).

The management of chronic hyponatremia is complicated significantly by the asymmetry of the cellular response to correction of plasma Na^+ concentration. Specifically, the *reaccumulation* of organic osmolytes by brain cells is attenuated and delayed as osmolality increases after correction of hyponatremia, sometimes resulting in degenerative loss of oligodendrocytes and an osmotic demyelination syndrome (ODS). Overly rapid correction of hyponatremia (>8–10 m*M* in 24 h or 18 m*M* in 48 h) causes hypertonic stress in astrocytes within brain regions prone to ODS, leading to generalized protein ubiquitination and endoplasmic reticulum stress due to activation of the unfolded protein response; this is accompanied by apoptotic and autophagic cell death. Rapid correction of hyponatremia also causes a disruption in integrity of the blood-brain barrier, allowing the entry of immune mediators that may contribute to demyelination. The lesions of ODS classically affect the pons, a neuroanatomic structure wherein the delay in the reaccumulation of osmotic osmolytes is particularly pronounced; clinically, patients with central pontine myelinolysis can present 1 or more days after overcorrection of hyponatremia with paraparesis or quadriparesis, dysphagia, dysarthria, diplopia, a "locked-in syndrome," and/or loss of consciousness. Other regions of the brain can also be involved in ODS, most commonly in association with lesions of the pons but occasionally in isolation; in order of frequency, the lesions of extrapontine myelinolysis can occur in the cerebellum, lateral geniculate body, thalamus, putamen, and cerebral cortex or subcortex. Clinical presentation of ODS can, therefore, vary as a function of the extent and localization of extrapontine myelinolysis, with the reported development of ataxia, mutism, parkinsonism, dystonia, and catatonia. Relowering of plasma Na^+ concentration after overly rapid correction can prevent or attenuate ODS (see the section on treatment of hyponatremia below). However, even appropriately slow correction can be associated with ODS, particularly in patients with additional risk factors; these include alcoholism, malnutrition, hypokalemia, and liver transplantation.

Diagnostic Approach to Hyponatremia Clinical assessment of hyponatremic patients should focus on the underlying cause; a detailed drug history is particularly crucial (Table 56-1). A careful clinical assessment of volume status is obligatory for the classical diagnostic approach to hyponatremia (Fig. 56-5). Hyponatremia is frequently multifactorial, particularly when severe; clinical evaluation should consider *all* the possible causes for excessive circulating AVP, including volume status, drugs, and the presence of nausea and/or pain. Radiologic imaging may also be appropriate to assess whether patients have a pulmonary or CNS cause for hyponatremia. A screening chest x-ray may fail to detect a small-cell carcinoma of the lung; computed tomography (CT) scanning of the thorax should be considered in patients at high risk for this tumor (e.g., patients with a smoking history).

Laboratory investigation should include a measurement of serum osmolality to exclude pseudohyponatremia, which is defined as the coexistence of hyponatremia with a normal or increased plasma tonicity. Most clinical laboratories measure plasma Na^+ concentration by testing diluted samples with automated ion-sensitive electrodes, correcting for this dilution by assuming that plasma is 93% water. This correction factor can be inaccurate in patients with pseudohyponatremia due to extreme hyperlipidemia and/or hyperproteinemia, in whom serum lipid or protein makes up a greater percentage of plasma volume. The measured osmolality should also be converted to the effective osmolality (tonicity) by subtracting the measured concentration of urea (divided by 2.8, if in mg/dL); patients with hyponatremia have an effective osmolality of <275 mOsm/kg.

Elevated BUN and creatinine in routine chemistries can also indicate renal dysfunction as a potential cause of hyponatremia, whereas hyperkalemia may suggest adrenal insufficiency or hypoaldosteronism. Serum glucose should also be measured; plasma Na^+ concentration falls by ~1.6–2.4 m*M* for every 100-mg/dL increase in glucose, due to glucose-induced water efflux from cells; this "true" hyponatremia resolves after correction of hyperglycemia. Measurement of serum uric acid should also be performed; whereas patients with SIAD-type physiology will typically be hypouricemic (serum uric acid <4 mg/dL), volume-depleted patients will often be hyperuricemic. In the appropriate clinical setting, thyroid, adrenal, and pituitary function should also be tested; hypothyroidism and secondary adrenal failure due to pituitary insufficiency are important causes of euvolemic hyponatremia, whereas primary adrenal failure causes hypovolemic hyponatremia. A cosyntropin stimulation test is necessary to assess for primary adrenal insufficiency.

Urine electrolytes and osmolality are crucial tests in the initial evaluation of hyponatremia. A urine Na^+ concentration <20–30 m*M* is consistent with hypovolemic hyponatremia, in the clinical absence of a hypervolemic, Na^+-avid syndrome such as CHF (Fig. 56-5). In contrast, patients with SIAD will typically excrete urine with an Na^+ concentration that is >30 m*M*. However, there can be substantial overlap in urine Na^+ concentration values in patients with SIAD and hypovolemic hyponatremia, particularly in the elderly; the ultimate "gold standard" for the diagnosis of hypovolemic hyponatremia is the demonstration that plasma Na^+ concentration corrects after hydration with normal saline. Patients with thiazide-associated hyponatremia may also present with higher than expected urine Na^+ concentration and other findings suggestive of SIAD; one should defer making a diagnosis of SIAD in these patients until 1–2 weeks after discontinuing the thiazide. A urine osmolality <100 mOsm/kg is suggestive of polydipsia; urine osmolality >400 mOsm/kg indicates that AVP excess is playing a more dominant role, whereas intermediate values are more consistent with multifactorial pathophysiology (e.g., AVP excess with a significant component of polydipsia). Patients with hyponatremia due to decreased solute intake (beer potomania) typically have urine Na^+ concentration <20 m*M* and urine osmolality in the range of <100 to the low 200s. Finally, the measurement of urine K^+ concentration is required to calculate the urine-to-plasma electrolyte ratio, which is useful to predict the response to fluid restriction (see the section on treatment of hyponatremia below).

TREATMENT

Hyponatremia

Three major considerations guide the therapy of hyponatremia. First, the presence and/or severity of symptoms determine the urgency and goals of therapy. Patients with acute hyponatremia (Table 56-2) present with symptoms that can range from headache, nausea, and/or vomiting, to seizures, obtundation, and central herniation; patients with chronic hyponatremia, present for >48 h, are less likely to have severe symptoms. Second, patients with chronic hyponatremia are at risk for ODS if plasma Na^+ concentration is corrected by >8–10 m*M* within the first 24 h and/or by >18 m*M* within the first 48 h. Third, the response to interventions such as hypertonic saline, isotonic saline, or AVP antagonists can be highly unpredictable, such that frequent monitoring of plasma Na^+ concentration during corrective therapy is imperative.

Once the urgency in correcting the plasma Na^+ concentration has been established and appropriate therapy instituted, the focus should be on treatment or withdrawal of the underlying cause. Patients with euvolemic hyponatremia due to SIAD, hypothyroidism, or secondary adrenal failure will respond to successful treatment of the underlying cause, with an increase in plasma Na^+ concentration. However, not all causes of SIAD are immediately reversible, necessitating pharmacologic therapy to increase the plasma Na^+ concentration (see below). Hypovolemic hyponatremia will respond to intravenous hydration with isotonic normal saline, with a rapid reduction in circulating AVP and a brisk water diuresis; it may be necessary to reduce the rate of correction if

the history suggests that hyponatremia has been chronic, i.e., present for >48 h (see below). Hypervolemic hyponatremia due to CHF will often respond to improved therapy of the underlying cardiomyopathy, e.g., following the institution or intensification of angiotensin-converting enzyme (ACE) inhibition. Finally, patients with hyponatremia due to beer potomania and low solute intake will respond very rapidly to intravenous saline and the resumption of a normal diet. Notably, patients with beer potomania have a very high risk of developing ODS, due to the associated hypokalemia, alcoholism, malnutrition, and high risk of overcorrecting the plasma Na^+ concentration.

Water deprivation has long been a cornerstone of the therapy of chronic hyponatremia. However, patients who are excreting minimal electrolyte-free water will require aggressive fluid restriction; this can be very difficult for patients with SIAD to tolerate, given that their thirst is also inappropriately stimulated. The urine-to-plasma electrolyte ratio (urinary $[Na^+] + [K^+]$/plasma $[Na^+]$) can be exploited as a quick indicator of electrolyte-free water excretion (**Table 56-3**); patients with a ratio of >1 should be more aggressively restricted (<500 mL/d) if possible, those with a ratio of ~1 should be restricted to 500–700 mL/d, and those with a ratio <1 should be restricted to <1 L/d. In hypokalemic patients, potassium replacement will serve to increase plasma Na^+ concentration, given that the plasma Na^+ concentration is a function of both exchangeable Na^+ and exchangeable K^+ divided by total-body water; a corollary is that aggressive repletion of K^+ has the potential to overcorrect the plasma Na^+ concentration even in the absence of hypertonic saline. Plasma Na^+ concentration will also tend to respond to an increase in dietary solute intake, which increases the ability to excrete free water; this can be accomplished with oral salt tablets and with newly available, palatable preparations of oral urea.

Patients in whom therapy with fluid restriction, potassium replacement, and/or increased solute intake fails may merit pharmacologic therapy to increase their plasma Na^+ concentration. Some patients with SIAD initially respond to combined therapy with oral furosemide, 20 mg twice a day (higher doses may be necessary in renal insufficiency), and oral salt tablets; furosemide serves to inhibit the renal countercurrent mechanism and blunt urinary concentrating ability, whereas the salt tablets counteract diuretic-associated natriuresis. The risk of hypokalemia and/or renal dysfunction limits enthusiasm for this approach, which requires careful titration of diuretic and salt tablets. Demeclocycline is a potent inhibitor of principal cells and can be used in patients whose Na levels do not increase in response to furosemide and salt tablets. However, this agent can be associated with a reduction in GFR, due to excessive natriuresis and/or direct renal toxicity; it should be avoided in cirrhotic patients in particular, who are at higher risk of nephrotoxicity due to drug accumulation. If available, palatable preparations of oral urea can also be used to manage SIAD, with comparable efficacy to AVP antagonists (vaptans); the increase in solute excretion with oral urea ingestion increases free water excretion, thus reducing the plasma Na^+.

AVP antagonists (vaptans) are highly effective in SIAD and in hypervolemic hyponatremia due to heart failure or cirrhosis, reliably increasing plasma Na^+ concentration due to their "aquaretic" effects (augmentation of free water clearance). Most of these agents specifically antagonize the V_2 AVP receptor; tolvaptan is currently the only oral V_2 antagonist to be approved by the U.S. Food and Drug Administration. Conivaptan, the only available intravenous vaptan, is a mixed V_{1A}/V_2 antagonist, with a modest risk of hypotension due to V_{1A} receptor inhibition. Therapy with vaptans must be initiated in a hospital setting, with a liberalization of fluid restriction (>2 L/d) and close monitoring of plasma Na^+ concentration. Although approved for the management of all but hypovolemic hyponatremia and acute hyponatremia, the clinical indications are limited. Oral tolvaptan is perhaps most appropriate for the management of significant and persistent SIAD (e.g., in small-cell lung carcinoma) that has not responded to water restriction and/or oral furosemide and salt tablets. Abnormalities in liver function tests have been reported with chronic tolvaptan therapy; hence, the use of this agent should be restricted to <1–2 months.

Treatment of acute symptomatic hyponatremia should include hypertonic 3% saline (513 m*M*) to acutely increase plasma Na^+ concentration by 1–2 m*M*/h to a total of 4–6 m*M*; this modest increase is typically sufficient to alleviate severe acute symptoms, after which corrective guidelines for chronic hyponatremia are appropriate (see below). A bolus of 100 mL of hypertonic saline is more effective than an infusion, rapidly improving both serum sodium and mental status. For ongoing infusions, a number of equations have been developed to estimate the required rate of hypertonic saline, which has an Na^+-Cl^- concentration of 513 m*M*. The traditional approach is to calculate an Na^+ deficit, where the Na^+ deficit = 0.6 × body weight × (target plasma Na^+ concentration – starting plasma Na^+ concentration), followed by a calculation of the required rate. Regardless of the method used to determine the rate of administration, the increase in plasma Na^+ concentration can be highly unpredictable during treatment with hypertonic saline, due to rapid changes in the underlying physiology; plasma Na^+ concentration should be monitored every 2–4 h during treatment, with appropriate changes in therapy based on the observed rate of change. The administration of supplemental oxygen and ventilatory support is also critical in acute hyponatremia, in the event that patients develop acute pulmonary edema or hypercapneic respiratory failure. Intravenous loop diuretics will help treat acute pulmonary edema and will also increase free water excretion, by interfering with the renal countercurrent multiplication system. AVP antagonists do *not* have an approved role in the management of acute hyponatremia.

The rate of correction should be comparatively slow in *chronic* hyponatremia (<6–8 m*M* in the first 24 h and <6 m*M* each subsequent 24 h) so as to avoid ODS; lower target rates are appropriate in patients at particular risk for ODS, such as alcoholics or hypokalemic patients. Overcorrection of the plasma Na^+ concentration can occur when AVP levels rapidly normalize, for example, following the treatment of patients with chronic hypovolemic hyponatremia with intravenous saline or following glucocorticoid replacement of patients with hypopituitarism and secondary adrenal failure. Approximately 10% of patients treated with vaptans will overcorrect; the risk is increased if water intake is not liberalized. In the event that the plasma Na^+ concentration overcorrects following therapy, hyponatremia should be reinduced or stabilized by the administration of the AVP *agonist* desmopressin acetate (DDAVP) and/or the administration of free water, typically intravenous D_5W; the goal is to prevent or reverse the development of ODS. Alternatively,

TABLE 56-3 Management of Hypernatremia

Water Deficit

1. Estimate total-body water (TBW): 50% of body weight in women and 60% in men
2. Calculate free-water deficit: $[(Na^+ - 140)/140] \times TBW$
3. Administer deficit over 48–72 h, without decrease in plasma Na^+ concentration by >10 m*M*/24 h

Ongoing Water Losses

4. Calculate free-water clearance, C_eH_2O:

$$C_eH_2O = V \times \left(1 - \frac{U_{Na} + U_k}{P_{Na}}\right)$$

where V is urinary volume, U_{Na} is urinary $[Na^+]$, U_K is urinary $[K^+]$, and P_{Na} is plasma $[Na^+]$

Insensible Losses

5. ~10 mL/kg per day: less if ventilated, more if febrile

Total

6. Add components to determine water deficit and ongoing water loss; correct the water deficit over 48–72 h and replace daily water loss. Avoid correction of plasma $[Na^+]$ by >10 m*M*/d.

the treatment of patients with marked hyponatremia can be initiated with the twice-daily administration of DDAVP to maintain constant AVP bioactivity, combined with the administration of hypertonic saline to slowly correct the serum sodium in a more controlled fashion, thus reducing upfront the risk of overcorrection.

HYPERNATREMIA

Etiology Hypernatremia is defined as an increase in the plasma Na^+ concentration to >145 m*M*. Considerably less common than hyponatremia, hypernatremia is nonetheless associated with mortality rates of as high as 40–60%, mostly due to the severity of the associated underlying disease processes. Hypernatremia is usually the result of a combined water and electrolyte deficit, with losses of H_2O in excess of Na^+. Less frequently, the ingestion or iatrogenic administration of excess Na^+ can be causative, for example, after IV administration of excessive hypertonic Na^+-Cl^- or Na^+-HCO_3^- **(Fig. 56-6)**.

Elderly individuals with reduced thirst and/or diminished access to fluids are at the highest risk of developing hypernatremia. Patients with hypernatremia may rarely have a central defect in hypothalamic osmoreceptor function, with a mixture of both decreased thirst and reduced AVP secretion. Causes of this adipsic DI include primary or metastatic tumor, occlusion or ligation of the anterior communicating artery, trauma, hydrocephalus, and inflammation such as sarcoidosis.

Hypernatremia can develop following the loss of water via both renal and nonrenal routes. Insensible losses of water may increase in the setting of fever, exercise, heat exposure, severe burns, or mechanical ventilation. Diarrhea is, in turn, the most common gastrointestinal cause of hypernatremia. Notably, osmotic diarrhea and viral gastroenteritides typically generate stools with Na^+ and K^+ <100 m*M*, thus leading to water loss and hypernatremia; in contrast, secretory diarrhea typically results in isotonic stool and thus hypovolemia with or without hypovolemic hyponatremia.

Common causes of renal water loss include osmotic diuresis secondary to hyperglycemia, excess urea, postobstructive diuresis, or mannitol; these disorders share an increase in urinary solute excretion and urinary osmolality (see "Diagnostic Approach," below). Hypernatremia due to a water diuresis occurs in central or nephrogenic DI (NDI).

NDI is characterized by renal resistance to AVP, which can be partial or complete (see "Diagnostic Approach," below). Genetic causes include loss-of-function mutations in the X-linked V_2 receptor; mutations in the AVP-responsive aquaporin-2 water channel can cause autosomal recessive and autosomal dominant NDI, whereas recessive deficiency of the aquaporin-1 water channel causes a more modest concentrating defect (Fig. 56-2). Hypercalcemia can also cause polyuria and NDI; calcium signals directly through the calcium-sensing receptor to downregulate Na^+, K^+, and Cl^- transport by the TALH and water transport in principal cells, thus reducing renal concentrating ability in hypercalcemia. Another common acquired cause of NDI is hypokalemia, which inhibits the renal response to AVP and downregulates aquaporin-2 expression. Several drugs can cause acquired NDI, in particular, lithium, ifosfamide, and several antiviral agents. Lithium causes NDI by multiple mechanisms, including direct inhibition of renal glycogen synthase kinase-3 (GSK3), a kinase thought to be the pharmacologic target of lithium in bipolar disease; GSK3 is required for the response of principal cells to AVP. The entry of lithium through the amiloride-sensitive Na^+ channel ENaC (Fig. 56-4) is required for the effect of the drug on principal cells, such that combined therapy within lithium and amiloride can mitigate lithium-associated NDI. However, lithium causes chronic tubulointerstitial scarring and chronic kidney disease after prolonged therapy, such that patients may have a persistent NDI long after stopping the drug, with a reduced therapeutic benefit from amiloride.

Finally, gestational DI is a rare complication of late-term pregnancy wherein increased activity of a circulating placental protease with "vasopressinase" activity leads to reduced circulating AVP and polyuria, often accompanied by hypernatremia. DDAVP is an effective therapy for this syndrome, given its resistance to the vasopressinase enzyme.

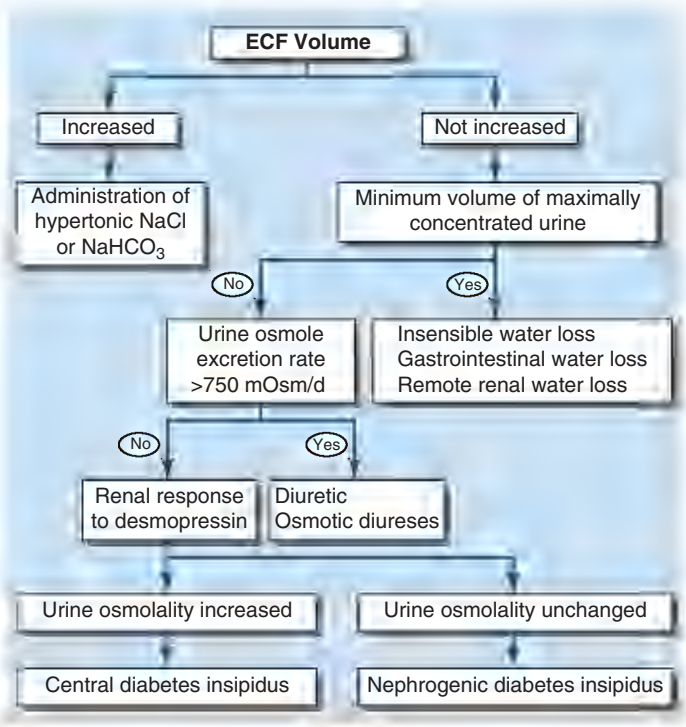

FIGURE 56-6 The diagnostic approach to hypernatremia. ECF, extracellular fluid.

Clinical Features Hypernatremia increases osmolality of the ECF, generating an osmotic gradient between the ECF and ICF, an efflux of intracellular water, and cellular shrinkage. As in hyponatremia, the symptoms of hypernatremia are predominantly neurologic. Altered mental status is the most frequent manifestation, ranging from mild confusion and lethargy to deep coma. The sudden shrinkage of brain cells in acute hypernatremia may lead to parenchymal or subarachnoid hemorrhages and/or subdural hematomas; however, these vascular complications are primarily encountered in pediatric and neonatal patients. Rarely, osmotic demyelination may occur in acute hypernatremia. Osmotic damage to muscle membranes can also lead to hypernatremic rhabdomyolysis. Brain cells accommodate to a chronic increase in ECF osmolality (>48 h) by activating membrane transporters that mediate influx and intracellular accumulation of organic osmolytes (creatine, betaine, glutamate, myoinositol, and taurine); this results in an increase in ICF water and normalization of brain parenchymal volume. In consequence, patients with *chronic* hypernatremia are less likely to develop severe neurologic compromise. However, the cellular response to chronic hypernatremia predisposes pediatric patients with hypernatremia, particularly infants, to the development of cerebral edema and seizures during overly rapid hydration (overcorrection of plasma Na^+ concentration by >10 m*M*/d).

Diagnostic Approach The history should focus on the presence or absence of thirst, polyuria, and/or an extrarenal source for water loss, such as diarrhea. The physical examination should include a detailed neurologic exam and an assessment of the ECFV; patients with a particularly large water deficit and/or a combined deficit in electrolytes and water may be hypovolemic, with reduced JVP and orthostasis. Accurate documentation of daily fluid intake and daily urine output is also critical for the diagnosis and management of hypernatremia.

Laboratory investigation should include a measurement of serum and urine osmolality, in addition to urine electrolytes. The appropriate response to hypernatremia and a serum osmolality >295 mOsm/kg is an increase in circulating AVP and the excretion of low volumes (<500 mL/d) of maximally concentrated urine, i.e., urine with osmolality >800 mOsm/kg; should this be the case, then an extrarenal source of water loss is primarily responsible for the generation of hypernatremia. Many patients with hypernatremia are polyuric; should an osmotic diuresis be responsible, with excessive excretion of Na^+-Cl^-, glucose,

and/or urea, then daily solute excretion will be >750–1000 mOsm/d (>15 mOsm/kg body water per day) (Fig. 56-6). More commonly, patients with hypernatremia and polyuria will have a predominant water diuresis, with excessive excretion of hypotonic, dilute urine.

Adequate differentiation between nephrogenic and central causes of DI requires the measurement of the response in urinary osmolality to DDAVP, combined with measurement of circulating AVP in the setting of hypertonicity. If measurement of serum copeptin is available, an "indirect water deprivation" test can be performed in patients with hypotonic polyuria without hypernatremia; if an infusion of hypertonic saline increases the level of circulating copeptin, a peptide co-secreted with AVP, then the patient suffers from polydipsia rather than central DI. By definition, patients with baseline hypernatremia are hypertonic, with an adequate stimulus for AVP by the posterior pituitary. Therefore, in contrast to polyuric patients with a normal or reduced baseline plasma Na^+ concentration and osmolality, a water deprivation test **(Chap. 55)** is unnecessary in hypernatremia; indeed, water deprivation is absolutely contraindicated in this setting, given the risk for worsening the hypernatremia. Hypernatremic patients with NDI will have high serum levels of AVP and copeptin. Their low urine osmolality will also fail to respond to DDAVP, increasing by <50% or <150 mOsm/kg from baseline; patients with central DI will respond to DDAVP, with a reduced circulating AVP and copeptin. Patients may exhibit a partial response to DDAVP, with a >50% rise in urine osmolality that nonetheless fails to reach 800 mOsm/kg; the level of circulating AVP will help differentiate the underlying cause, i.e., NDI versus central DI. In pregnant patients, AVP assays should be drawn in tubes containing the protease inhibitor 1,10-phenanthroline to prevent in vitro degradation of AVP by placental vasopressinase.

For patients with hypernatremia due to renal loss of water, it is critical to quantify *ongoing* daily losses using the calculated electrolyte-free water clearance, in addition to calculation of the baseline water deficit (the relevant formulas are discussed in Table 56-3). This requires daily measurement of urine electrolytes, combined with accurate measurement of daily urine volume.

TREATMENT

Hypernatremia

The underlying cause of hypernatremia should be withdrawn or corrected, be it drugs, hyperglycemia, hypercalcemia, hypokalemia, or diarrhea. The approach to the correction of hypernatremia is outlined in Table 56-3. It is imperative to correct hypernatremia slowly to avoid cerebral edema, typically replacing the calculated free water deficit over 48 h. Ideally, the plasma Na^+ concentration should be corrected by no more than 10 m*M*/d, which may take longer than 48 h in patients with severe hypernatremia (>160 m*M*). In critically ill adults, however, recent evidence does not indicate that rapid correction of hypernatremia is associated with a higher risk for mortality, seizure, alteration of consciousness, and/or cerebral edema. Given that restricting the rate of correction to <10 m*M*/d has no physiologic sequelae, it seems prudent to restrict correction in adults to this rate; however, should that rate be exceeded, hypernatremia does not need to be reinduced.

Water should ideally be administered by mouth or by nasogastric tube, as the most direct way to provide free water, i.e., water without electrolytes. Alternatively, patients can receive free water in dextrose-containing IV solutions, such as 5% dextrose (D_5W); blood glucose should be monitored in case hyperglycemia occurs. Depending on the history, blood pressure, or clinical volume status, it may be appropriate to initially treat with hypotonic saline solutions (1/4 or 1/2 normal saline); normal saline is usually inappropriate in the absence of very severe hypernatremia, where normal saline is proportionally more hypotonic relative to plasma, or frank hypotension. Calculation of urinary electrolyte-free water clearance (Table 56-3) is required to estimate daily, ongoing loss of free water in patients with NDI or central DI, which should be replenished daily.

Additional therapy may be feasible in specific cases. Patients with central DI should respond to the administration of intravenous, intranasal, or oral DDAVP. Patients with NDI due to lithium may reduce their polyuria with amiloride (2.5–10 mg/d), which decreases entry of lithium into principal cells by inhibiting ENaC (see above); in practice, however, most patients with lithium-associated DI are able to compensate for their polyuria by simply increasing their daily water intake. Thiazides may reduce polyuria due to NDI, ostensibly by inducing hypovolemia and increasing proximal tubular water reabsorption. Occasionally, nonsteroidal anti-inflammatory drugs (NSAIDs) have been used to treat polyuria associated with NDI, reducing the negative effect of intrarenal prostaglandins on urinary concentrating mechanisms; however, this assumes the risks of NSAID-associated gastric and/or renal toxicity. Furthermore, it must be emphasized that thiazides, amiloride, and NSAIDs are only appropriate for *chronic* management of polyuria from NDI and have *no* role in the acute management of associated hypernatremia, where the focus is on replacing free water deficits and ongoing free water loss.

POTASSIUM DISORDERS

Homeostatic mechanisms maintain plasma K^+ concentration between 3.5 and 5.0 m*M*, despite marked variation in dietary K^+ intake. In a healthy individual at steady state, the entire daily intake of potassium is excreted, ~90% in the urine and 10% in the stool; thus, the kidney plays a dominant role in potassium homeostasis. However, >98% of total-body potassium is intracellular, chiefly in muscle; buffering of extracellular K^+ by this large intracellular pool plays a crucial role in the regulation of plasma K^+ concentration. Changes in the exchange and distribution of intra- and extracellular K^+ can thus lead to marked hypo- or hyperkalemia. A corollary is that massive necrosis and the attendant release of tissue K^+ can cause severe hyperkalemia, particularly in the setting of acute kidney injury and reduced excretion of K^+.

Changes in whole-body K^+ content are primarily mediated by the kidney, which *reabsorbs* filtered K^+ in hypokalemic, K^+-deficient states and *secretes* K^+ in hyperkalemic, K^+-replete states. Although K^+ is transported along the entire nephron, it is the principal cells of the connecting segment (CNT) and cortical CD that play a dominant role in renal K^+ secretion, whereas alpha-intercalated cells of the outer medullary CD function in renal tubular reabsorption of filtered K^+ in K^+-deficient states. In principal cells, apical Na^+ entry via the amiloride-sensitive ENaC generates a lumen-negative potential difference, which drives passive K^+ exit through apical K^+ channels (Fig. 56-4). Two major K^+ channels mediate distal tubular K^+ secretion: the secretory K^+ channel ROMK (renal outer medullary K^+ channel; also known as Kir1.1 or KcnJ1) and the flow-sensitive "big potassium" (BK) or maxi-K K^+ channel. ROMK is thought to mediate the bulk of constitutive K^+ secretion, whereas increases in distal flow rate and/or genetic absence of ROMK activate K^+ secretion via the BK channel.

An appreciation of the relationship between ENaC-dependent Na^+ entry and distal K^+ secretion (Fig. 56-4) is required for the bedside interpretation of potassium disorders. For example, decreased distal delivery of Na^+, as occurs in hypovolemic, prerenal states, tends to blunt the ability to excrete K^+, leading to hyperkalemia; on the other hand, an *increase* in distal delivery of Na^+ and distal flow rate, as occurs after treatment with thiazide and loop diuretics, can enhance K^+ secretion and lead to hypokalemia. Hyperkalemia is also a predictable consequence of drugs that directly inhibit ENaC, due to the role of this Na^+ channel in generating a lumen-negative potential difference. Aldosterone in turn has a major influence on potassium excretion, increasing the activity of ENaC channels and thus amplifying the driving force for K^+ secretion across the luminal membrane of principal cells. Abnormalities in the renin-angiotensin-aldosterone system can thus cause both hypokalemia and hyperkalemia. Notably, however, potassium excess and potassium restriction have opposing, aldosterone-independent effects on the density and activity of apical K^+ channels in the distal nephron, i.e., factors other than aldosterone modulate the renal capacity to secrete K^+. In addition, potassium restriction and

hypokalemia activate aldosterone-independent distal *reabsorption* of filtered K^+, activating apical H^+/K^+-ATPase activity in intercalated cells within the outer medullary CD. Reflective perhaps of this physiology, changes in plasma K^+ concentration are not universal in disorders associated with changes in aldosterone activity.

HYPOKALEMIA

Hypokalemia, defined as a plasma K^+ concentration of <3.5 m*M*, occurs in up to 20% of hospitalized patients. Hypokalemia is associated with a tenfold increase in in-hospital mortality, due to adverse effects on cardiac rhythm, blood pressure, and cardiovascular morbidity. Mechanistically, hypokalemia can be caused by redistribution of K^+ between tissues and the ECF or by renal and nonrenal loss of K^+ **(Table 56-4)**. Systemic hypomagnesemia can also cause treatment-resistant hypokalemia, due to a combination of reduced cellular uptake of K^+ and exaggerated renal secretion. Spurious hypokalemia or "pseudohypokalemia" can occasionally result from in vitro cellular uptake of K^+ after venipuncture, for example, due to profound leukocytosis in acute leukemia.

TABLE 56-4 Causes of Hypokalemia

- I. Decreased intake
  - A. Starvation
  - B. Clay ingestion
- II. Redistribution into cells
  - A. Acid-base
    - 1. Metabolic alkalosis
  - B. Hormonal
    - 1. Insulin
    - 2. Increased β_2-adrenergic sympathetic activity: post–myocardial infarction, head injury
    - 3. β_2-Adrenergic agonists—bronchodilators, tocolytics
    - 4. α-Adrenergic antagonists
    - 5. Thyrotoxic periodic paralysis
    - 6. Downstream stimulation of Na^+/K^+-ATPase: theophylline, caffeine
  - C. Anabolic state
    - 1. Vitamin B_{12} or folic acid administration (red blood cell production)
    - 2. Granulocyte-macrophage colony-stimulating factor (white blood cell production)
    - 3. Total parenteral nutrition
  - D. Other
    - 1. Pseudohypokalemia
    - 2. Hypothermia
    - 3. Familial hypokalemic periodic paralysis
    - 4. Barium toxicity: systemic inhibition of "leak" K^+ channels
- III. Increased loss
  - A. Nonrenal
    - 1. Gastrointestinal loss (diarrhea)
    - 2. Integumentary loss (sweat)
  - B. Renal
    - 1. Increased distal flow and distal Na+ delivery: diuretics, osmotic diuresis, salt-wasting nephropathies
    - 2. Increased secretion of potassium
      - a. Mineralocorticoid excess: primary hyperaldosteronism (aldosterone-producing adenomas, primary or unilateral adrenal hyperplasia, idiopathic hyperaldosteronism due to bilateral adrenal hyperplasia, and adrenal carcinoma), genetic hyperaldosteronism (familial hyperaldosteronism types I/II/III, congenital adrenal hyperplasias), secondary hyperaldosteronism (malignant hypertension, renin-secreting tumors, renal artery stenosis, hypovolemia), Cushing's syndrome, Bartter's syndrome, Gitelman's syndrome
      - b. Apparent mineralocorticoid excess: genetic deficiency of 11β-dehydrogenase-2 (syndrome of apparent mineralocorticoid excess), inhibition of 11β-dehydrogenase-2 (glycyrrhetinic/glycyrrhizinic acid and/or carbenoxolone; itraconazole and posaconazole; licorice, food products, drugs), Liddle's syndrome (genetic activation of epithelial Na^+ channels)
      - c. Distal delivery of nonreabsorbed anions: vomiting, nasogastric suction, proximal renal tubular acidosis, diabetic ketoacidosis, glue-sniffing (toluene abuse), penicillin derivatives (penicillin, nafcillin, dicloxacillin, ticarcillin, oxacillin, and carbenicillin)
    - 3. Magnesium deficiency

Redistribution and Hypokalemia Insulin, β_2-adrenergic activity, thyroid hormone, and alkalosis promote Na^+/K^+-ATPase-mediated cellular uptake of K^+, leading to hypokalemia. Inhibition of the passive *efflux* of K^+ can also cause hypokalemia, albeit rarely; this typically occurs in the setting of systemic inhibition of K^+ channels by toxic barium ions. Exogenous insulin can cause iatrogenic hypokalemia, particularly during the management of K^+-deficient states such as diabetic ketoacidosis. Alternatively, the stimulation of *endogenous* insulin can provoke hypokalemia, hypomagnesemia, and/or hypophosphatemia in malnourished patients given a carbohydrate load. Alterations in the activity of the endogenous sympathetic nervous system can cause hypokalemia in several settings, including alcohol withdrawal, hyperthyroidism, acute myocardial infarction, and severe head injury. β_2 agonists, including both bronchodilators and tocolytics (ritodrine), are powerful activators of cellular K^+ uptake; "hidden" sympathomimetics, such as pseudoephedrine and ephedrine in cough syrup or dieting agents, may also cause unexpected hypokalemia. Finally, xanthine-dependent activation of cAMP-dependent signaling, downstream of the β_2 receptor, can lead to hypokalemia, usually in the setting of overdose (theophylline) or marked overingestion (dietary caffeine).

Redistributive hypokalemia can also occur in the setting of hyperthyroidism, with periodic attacks of hypokalemic paralysis (thyrotoxic periodic paralysis [TPP]). Similar episodes of hypokalemic weakness in the absence of thyroid abnormalities occur in *familial* hypokalemic periodic paralysis, usually caused by missense mutations of voltage sensor domains within the α_1 subunit of L-type calcium channels or the skeletal Na^+ channel; these mutations generate an abnormal gating pore current activated by hyperpolarization. TPP develops more frequently in patients of Asian or Latin American origin; this shared predisposition has been linked to genetic variation in Kir2.6, a muscle-specific, thyroid hormone–responsive K^+ channel. Genome-wide association studies have also implicated variation in the *KCNJ2* gene, which encodes a related muscle K^+ channel, Kir 2.1, in predisposition to TPP. Patients with TPP typically present with weakness of the extremities and limb girdles, with paralytic episodes that occur most frequently between 1 and 6 A.M. Signs and symptoms of hyperthyroidism are not invariably present. Hypokalemia is usually profound and almost invariably accompanied by hypophosphatemia and hypomagnesemia. The hypokalemia in TPP is also attributed to both direct and indirect activation of the Na^+/K^+-ATPase, resulting in increased uptake of K^+ by muscle and other tissues. Increases in β-adrenergic activity play an important role in that high-dose propranolol (3 mg/kg) rapidly reverses the associated hypokalemia, hypophosphatemia, and paralysis. Outward-directed inward-rectifying K^+ current, mediated by KIR channels (primarily Kir2.1 and Kir2.2 tetramers), is also reduced in skeletal muscles of patients with TPP, providing an additional mechanism for hypokalemia. Together with increased Na^+/K^+-ATPase activity and increased circulating insulin, this reduced KIR current may trigger a "feedforward" cycle of hypokalemia leading to inactivation of muscle Na^+ channels, paradoxical depolarization, and paralysis.

Nonrenal Loss of Potassium The loss of K^+ in sweat is typically low, except under extremes of physical exertion. Direct gastric losses of K^+ due to vomiting or nasogastric suctioning are also minimal; however, the ensuing hypochloremic alkalosis results in persistent kaliuresis due to secondary hyperaldosteronism and bicarbonaturia, i.e., a *renal* loss of K^+. Diarrhea is a globally important cause of hypokalemia, given the worldwide prevalence of infectious diarrheal disease. Noninfectious gastrointestinal processes such as celiac disease, ileostomy, villous adenomas, inflammatory bowel disease, colonic pseudo-obstruction (Ogilvie's syndrome), VIPomas, and chronic laxative abuse can also cause significant hypokalemia; an exaggerated intestinal secretion of potassium by upregulated colonic BK channels has been directly implicated in the pathogenesis of hypokalemia in some of these disorders.

Renal Loss of Potassium Drugs can increase renal K^+ excretion by a variety of different mechanisms. Diuretics are a particularly common cause, due to associated increases in distal tubular Na^+ delivery and distal tubular flow rate, in addition to secondary hyperaldosteronism. Thiazides have a greater effect on plasma K^+ concentration than loop diuretics, despite their lesser natriuretic effect. The diuretic effect of thiazides is largely due to inhibition of the Na^+-Cl^- cotransporter NCC in DCT cells. This leads to a direct increase in the delivery of luminal Na^+ to the principal cells immediately downstream in the CNT and cortical CD, which augments Na^+ entry via ENaC, increases the lumen-negative potential difference, and amplifies K^+ secretion. The higher propensity of thiazides to cause hypokalemia may also be secondary to thiazide-associated hypocalciuria, versus the *hypercalciuria* seen with loop diuretics; the increases in downstream luminal calcium in response to loop diuretics inhibit ENaC in principal cells, thus reducing the lumen-negative potential difference and attenuating distal K^+ excretion. High doses of penicillin-related antibiotics (nafcillin, dicloxacillin, ticarcillin, oxacillin, and carbenicillin) can increase obligatory K^+ excretion by acting as nonreabsorbable anions in the distal nephron. Finally, several renal tubular toxins cause renal K^+ and magnesium wasting, leading to hypokalemia and hypomagnesemia; these drugs include aminoglycosides, amphotericin, foscarnet, cisplatin, and ifosfamide (see also "Magnesium Deficiency and Hypokalemia," below).

Aldosterone activates the ENaC channel in principal cells via multiple synergistic mechanisms, thus increasing the driving force for K^+ excretion. In consequence, increases in aldosterone bioactivity and/or gains in function of aldosterone-dependent signaling pathways are associated with hypokalemia. Increases in circulating aldosterone (hyperaldosteronism) may be primary or secondary. Increased levels of circulating renin in secondary forms of hyperaldosteronism lead to increased angiotensin II and thus aldosterone; renal artery stenosis is perhaps the most frequent cause (Table 56-4). Primary hyperaldosteronism may be genetic or acquired. Hypertension and hypokalemia, due to increases in circulating 11-deoxycorticosterone, occur in patients with congenital adrenal hyperplasia caused by defects in either steroid 11β-hydroxylase or steroid 17α-hydroxylase; deficient 11β-hydroxylase results in associated virilization and other signs of androgen excess, whereas reduced sex steroids in 17α-hydroxylase deficiency lead to hypogonadism.

The major forms of *isolated* primary genetic hyperaldosteronism are familial hyperaldosteronism type I (FH-I, also known as glucocorticoid-remediable hyperaldosteronism [GRA]) and familial hyperaldosteronism types II and III (FH-II and FH-III), in which aldosterone production is not repressible by exogenous glucocorticoids. FH-I is caused by a chimeric gene duplication between the homologous 11β-hydroxylase (*CYP11B1*) and aldosterone synthase (*CYP11B2*) genes, fusing the adrenocorticotropic hormone (ACTH)–responsive 11β-hydroxylase promoter to the coding region of aldosterone synthase; this chimeric gene is under the control of ACTH and thus repressible by glucocorticoids. FH-III is caused by mutations in the *KCNJ5* gene, which encodes the G protein–activated inward rectifier K^+ channel 4 (GIRK4); these mutations lead to the acquisition of sodium permeability in the mutant GIRK4 channels, causing an exaggerated membrane depolarization in adrenal glomerulosa cells and the activation of voltage-gated calcium channels. The resulting calcium influx is sufficient to produce aldosterone secretion and cell proliferation, leading to adrenal adenomas and hyperaldosteronism.

Acquired causes of primary hyperaldosteronism include aldosterone-producing adenomas (APAs), primary or unilateral adrenal hyperplasia (PAH), idiopathic hyperaldosteronism (IHA) due to bilateral adrenal hyperplasia, and adrenal carcinoma; APA and IHA account for close to 60% and 40%, respectively, of diagnosed hyperaldosteronism. Acquired somatic mutations in *KCNJ5* or less frequently in the *ATP1A1* (an Na^+/K^+ ATPase α subunit) and *ATP2B3* (a Ca^{2+} ATPase) genes can be detected in APAs; as in FH-III (see above), the exaggerated depolarization of adrenal glomerulosa cells caused by these mutations is implicated in the excessive adrenal proliferation and the exaggerated release of aldosterone.

Random testing of plasma renin activity (PRA) and aldosterone is a helpful screening tool in hypokalemic and/or hypertensive patients, with an aldosterone:PRA ratio of >50 suggestive of primary hyperaldosteronism. Hypokalemia and multiple antihypertensive drugs may alter the aldosterone:PRA ratio by suppressing aldosterone or increasing PRA, leading to a ratio of <50 in patients who do in fact have primary hyperaldosteronism; therefore, the clinical context should always be considered when interpreting these results. Additionally, drugs that modulate the renin-angiotensin-aldosterone axis should be stopped during workup of hyperaldosteronism; the only antihypertensives that do not interfere with the workup of hyperaldosteronism are verapamil, alpha blockers, hydralazine, and low-dose amiloride.

The glucocorticoid cortisol has equal affinity for the MLR to that of aldosterone, with resultant "mineralocorticoid-like" activity. However, cells in the aldosterone-sensitive distal nephron are protected from this "illicit" activation by the enzyme 11β-hydroxysteroid dehydrogenase-2 (11βHSD-2), which converts cortisol to cortisone; cortisone has minimal affinity for the MLR. Recessive loss-of-function mutations in the *11βHSD-2* gene are thus associated with cortisol-dependent activation of the MLR and the syndrome of apparent mineralocorticoid excess (SAME), encompassing hypertension, hypokalemia, hypercalciuria, and metabolic alkalosis, with suppressed PRA and suppressed aldosterone. A similar syndrome is caused by biochemical inhibition of 11βHSD-2 by glycyrrhetinic/glycyrrhizinic acid and/or carbenoxolone. Glycyrrhizinic acid is a natural sweetener found in licorice root, typically encountered in licorice and its many guises or as a flavoring agent in tobacco and food products. More recently, the antifungals itraconazole and posaconazole have been shown to inhibit 11βHSD-2, leading to hypertension and hypokalemia.

Finally, hypokalemia may also occur with systemic increases in glucocorticoids. In Cushing's syndrome caused by increases in pituitary ACTH **(Chap. 398)**, the incidence of hypokalemia is only 10%, whereas it is 60–100% in patients with ectopic secretion of ACTH, despite a similar incidence of hypertension. Indirect evidence suggests that the activity of renal 11βHSD-2 is reduced in patients with ectopic ACTH compared with Cushing's syndrome, resulting in SAME.

Finally, defects in multiple renal tubular transport pathways are associated with hypokalemia. For example, loss-of-function mutations in subunits of the acidifying H^+-ATPase in alpha-intercalated cells cause hypokalemic distal renal tubular acidosis, as do many acquired disorders of the distal nephron. Liddle's syndrome is caused by autosomal dominant gain-in-function mutations of ENaC subunits. Disease-associated mutations either activate the channel directly or abrogate aldosterone-inhibited retrieval of ENaC subunits from the plasma membrane; the end result is increased expression of activated ENaC channels at the plasma membrane of principal cells. Patients with Liddle's syndrome classically manifest severe hypertension with hypokalemia, unresponsive to spironolactone yet sensitive to amiloride. Hypertension and hypokalemia are, however, variable aspects of the Liddle's phenotype; more consistent features include a blunted aldosterone response to ACTH and reduced urinary aldosterone excretion.

Loss of the transport functions of the TALH and DCT nephron segments causes hereditary hypokalemic alkalosis and Bartter's syndrome (BS) and Gitelman's syndrome (GS), respectively. Patients with classic BS typically suffer from polyuria and polydipsia, due to the reduction in renal concentrating ability. They may have an increase in urinary calcium excretion, and 20% are hypomagnesemic. Other features include marked activation of the renin-angiotensin-aldosterone axis. Patients with antenatal BS suffer from a severe systemic disorder characterized by marked electrolyte wasting, polyhydramnios, and hypercalciuria with nephrocalcinosis; renal prostaglandin synthesis and excretion are significantly increased, accounting for much of the systemic symptoms. There are five disease genes for BS, all of them functioning in some aspect of regulated Na^+, K^+, and Cl^- transport by the TALH. In contrast, GS is genetically homogeneous, caused almost exclusively by loss-of-function mutations in the thiazide-sensitive Na^+-Cl^- cotransporter of the DCT. Patients with GS are uniformly hypomagnesemic and exhibit marked hypocalciuria, rather than the hypercalciuria typically seen in

BS; urinary calcium excretion is thus a critical diagnostic test in GS. GS is a milder phenotype than BS; however, patients with GS may suffer from chondrocalcinosis, an abnormal deposition of calcium pyrophosphate dihydrate (CPPD) in joint cartilage **(Chap. 327)**.

Magnesium Deficiency and Hypokalemia Magnesium depletion has inhibitory effects on muscle Na^+/K^+-ATPase activity, reducing influx into muscle cells and causing a secondary kaliuresis. In addition, magnesium depletion causes exaggerated K^+ secretion by the distal nephron; this effect is attributed to a reduction in the magnesium-dependent, intracellular block of K^+ efflux through the secretory K^+ channel of principal cells (ROMK; Fig. 56-4). In consequence, hypomagnesemic patients are clinically refractory to K^+ replacement in the absence of Mg^{2+} repletion. Notably, magnesium deficiency is also a common concomitant of hypokalemia because many disorders of the distal nephron may cause both potassium and magnesium wasting **(Chap. 327)**.

Clinical Features Hypokalemia has prominent effects on cardiac, skeletal, and intestinal muscle cells. In particular, hypokalemia is a major risk factor for both ventricular and atrial arrhythmias. Hypokalemia predisposes to digoxin toxicity by a number of mechanisms, including reduced competition between K^+ and digoxin for shared binding sites on cardiac Na^+/K^+-ATPase subunits. Electrocardiographic changes in hypokalemia include broad flat T waves, ST depression, and QT prolongation; these are most marked when serum K^+ is <2.7 mmol/L. Hypokalemia can thus be an important precipitant of arrhythmia in patients with additional genetic or acquired causes of QT prolongation. Hypokalemia also results in hyperpolarization of skeletal muscle, thus impairing the capacity to depolarize and contract; weakness and even paralysis may ensue. It also causes a skeletal myopathy and predisposes to rhabdomyolysis. Finally, the paralytic effects of hypokalemia on intestinal smooth muscle may cause intestinal ileus.

The functional effects of hypokalemia on the kidney can include Na^+-Cl^- and HCO_3^- retention, polyuria, phosphaturia, hypocitraturia, and an activation of renal ammoniagenesis. Bicarbonate retention and other acid-base effects of hypokalemia can contribute to the generation of metabolic alkalosis. Hypokalemic polyuria is due to a combination of central polydipsia and an AVP-resistant renal concentrating defect. Structural changes in the kidney due to hypokalemia include a relatively specific vacuolizing injury to proximal tubular cells, interstitial nephritis, and renal cysts. Hypokalemia also predisposes to acute kidney injury and can lead to end-stage renal disease (ESRD) in patients with long-standing hypokalemia due to eating disorders and/or laxative abuse.

Hypokalemia and/or reduced dietary K^+ are implicated in the pathophysiology and progression of hypertension, heart failure, vascular disease, and stroke. For example, short-term K^+ restriction in healthy humans and patients with essential hypertension induces Na^+-Cl^- retention and hypertension. Correction of hypokalemia is particularly important in hypertensive patients treated with diuretics, in whom blood pressure improves with potassium supplementation and the establishment of normokalemia.

Diagnostic Approach The cause of hypokalemia is usually evident from history, physical examination, and/or basic laboratory tests. The history should focus on medications (e.g., laxatives, diuretics, antibiotics), diet and dietary habits (e.g., licorice), and/or symptoms that suggest a particular cause (e.g., periodic weakness, diarrhea). The physical examination should pay particular attention to blood pressure, volume status, and signs suggestive of specific hypokalemic disorders, e.g., hyperthyroidism and Cushing's syndrome. Initial laboratory evaluation should include electrolytes, BUN, creatinine, serum osmolality, Mg^{2+}, Ca^{2+}, a complete blood count, and urinary pH, osmolality, creatinine, and electrolytes **(Fig. 56-7)**. The presence of a non–anion gap acidosis suggests a distal, hypokalemic renal tubular acidosis or diarrhea; calculation of the urinary anion gap can help differentiate these two diagnoses. Renal K^+ excretion can be assessed with a 24-h urine collection; a 24-h K^+ excretion of <15 mmol is indicative of an extrarenal cause of hypokalemia (Fig. 56-7). If only a random, spot urine sample is available, serum and urine osmolality can be used to calculate the transtubular K^+ gradient (TTKG), which should be <3 in the presence of hypokalemia (see also "Hyperkalemia"). Alternatively, a urinary K^+-to-creatinine ratio of >13 mmol/g creatinine (>1.5 mmol/mmol creatinine) is compatible with excessive renal K^+ excretion. Urine Cl^- is usually decreased in patients with hypokalemia from a nonreabsorbable anion, such as antibiotics or HCO_3^-. The most common causes of chronic hypokalemic alkalosis are surreptitious vomiting, diuretic abuse, and GS; these can be distinguished by the pattern of urinary electrolytes. Hypokalemic patients with vomiting due to bulimia will thus typically have a urinary Cl^- <10 mmol/L; urine Na^+, K^+, and Cl^- are persistently elevated in GS, due to loss of function in the thiazide-sensitive Na^+-Cl^- cotransporter, but less elevated in diuretic abuse and with greater variability. Urine diuretic screens for loop diuretics and thiazides may be necessary to further exclude diuretic abuse.

Other tests, such as urinary Ca^{2+}, thyroid function tests, and/or PRA and aldosterone levels, may also be appropriate in specific cases. A plasma aldosterone:PRA ratio of >50, due to suppression of circulating renin and an elevation of circulating aldosterone, is suggestive of hyperaldosteronism. Patients with hyperaldosteronism or apparent mineralocorticoid excess may require further testing, for example, adrenal vein sampling **(Chap. 398)** or the clinically available testing for specific genetic causes (e.g., FH-I, SAME, Liddle's syndrome). Patients with primary aldosteronism should thus be tested for the chimeric FH-I/GRA gene (see above) if they are younger than 20 years of age or have a family history of primary aldosteronism or stroke at a young age (<40 years). Preliminary differentiation of Liddle's syndrome due to mutant ENaC channels from SAME due to mutant 11βHSD-2 (see above), both of which cause hypokalemia and hypertension with aldosterone suppression, can be made on a clinical basis and then confirmed by genetic analysis; patients with Liddle's syndrome should respond to amiloride (ENaC inhibition) but not spironolactone, whereas patients with SAME will respond to spironolactone.

TREATMENT

Hypokalemia

The goals of therapy in hypokalemia are to prevent life-threatening and/or serious chronic consequences, to replace the associated K^+ deficit, and to correct the underlying cause and/or mitigate future hypokalemia. The urgency of therapy depends on the severity of hypokalemia, associated clinical factors (e.g., cardiac disease, digoxin therapy), and the rate of decline in serum K^+. Patients with a prolonged QT interval and/or other risk factors for arrhythmia should be monitored by continuous cardiac telemetry during repletion. Urgent but cautious K^+ replacement should be considered in patients with severe redistributive hypokalemia (plasma K^+ concentration <2.5 m*M*) and/or when serious complications ensue; however, this approach has a risk of rebound hyperkalemia following acute resolution of the underlying cause. When excessive activity of the sympathetic nervous system is thought to play a dominant role in redistributive hypokalemia, as in TPP, theophylline overdose, and acute head injury, high-dose propranolol (3 mg/kg) should be considered; this nonspecific β-adrenergic blocker will correct hypokalemia without the risk of rebound hyperkalemia.

Oral replacement with K^+-Cl^- is the mainstay of therapy in hypokalemia. Potassium phosphate, oral or IV, may be appropriate in patients with combined hypokalemia and hypophosphatemia. Potassium bicarbonate or potassium citrate should be considered in patients with concomitant metabolic acidosis. Notably, hypomagnesemic patients are refractory to K^+ replacement alone, such that concomitant Mg^{2+} deficiency should *always* be corrected with oral or intravenous repletion. The deficit of K^+ and the rate of correction should be estimated as accurately as possible; renal function, medications, and comorbid conditions such as diabetes should also be considered, so as to gauge the risk of overcorrection. In the absence of abnormal K^+ redistribution, the total deficit correlates with serum K^+, such that serum K^+ drops by ~0.27 m*M* for every

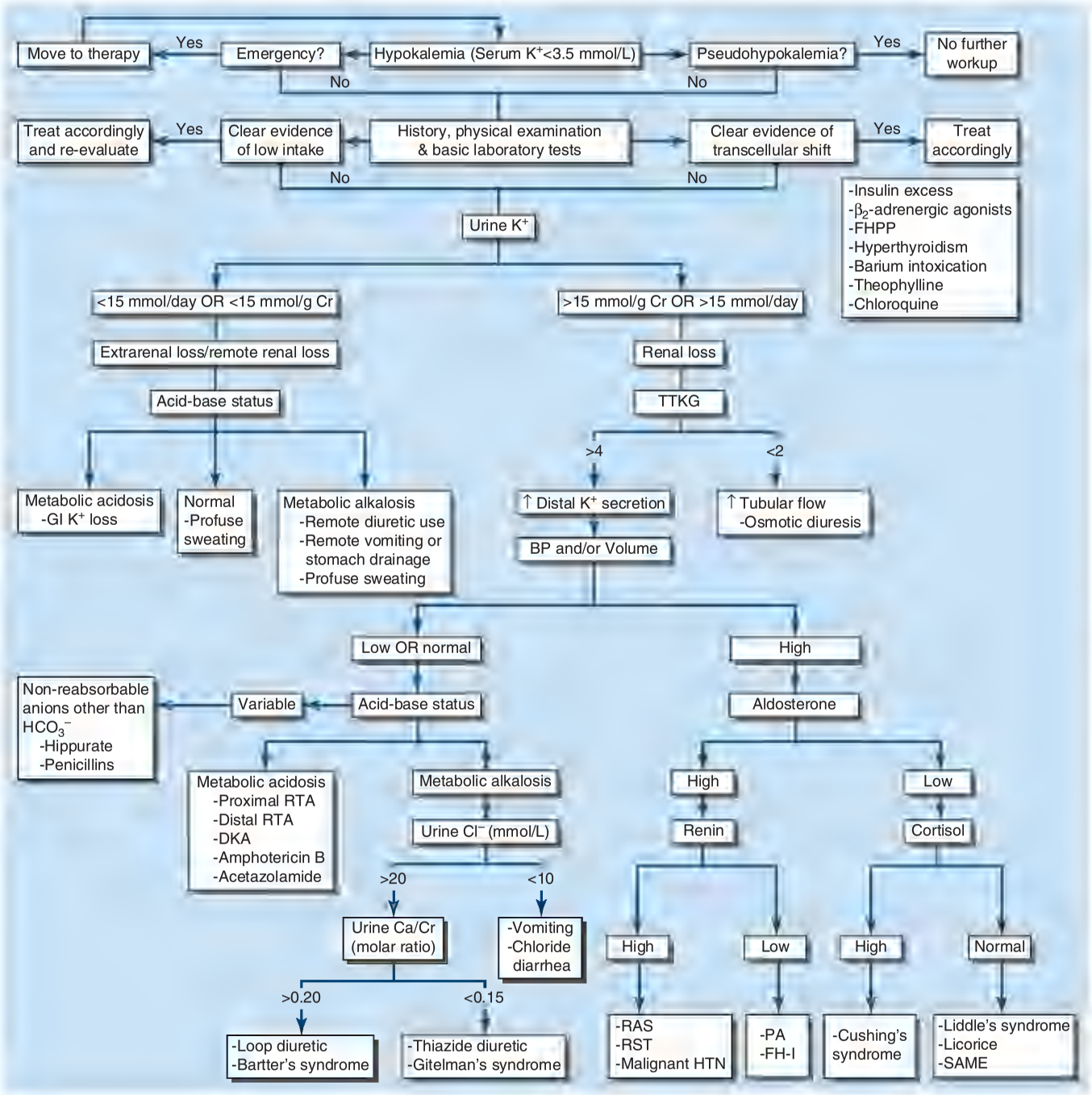

FIGURE 56-7 The diagnostic approach to hypokalemia. See text for details. AME, apparent mineralocorticoid excess; BP, blood pressure; CCD, cortical collecting duct; DKA, diabetic ketoacidosis; FH-I, familial hyperaldosteronism type I; FHPP, familial hypokalemic periodic paralysis; GI, gastrointestinal; GRA, glucocorticoid remediable aldosteronism; HTN, hypertension; PA, primary aldosteronism; RAS, renal artery stenosis; RST, renin-secreting tumor; RTA, renal tubular acidosis; SAME, syndrome of apparent mineralocorticoid excess; TTKG, transtubular potassium gradient. *(Reproduced with permission from DB Mount, K Zandi-Nejad: Disorders of potassium balance, in BM Brenner [ed], Brenner and Rector's The Kidney, 8th ed, Philadelphia, W.B. Saunders & Company, 2008.)*

100-mmol reduction in total-body stores; loss of 400–800 mmol of total-body K^+ results in a reduction in serum K^+ by ~2.0 m*M*. Notably, given the delay in redistributing potassium into intracellular compartments, this deficit must be replaced gradually over 24–48 h, with frequent monitoring of plasma K^+ concentration to avoid transient overrepletion and transient hyperkalemia.

The use of intravenous administration should be limited to patients unable to use the enteral route or in the setting of severe complications (e.g., paralysis, arrhythmia). Intravenous K^+-Cl^- should always be administered in saline solutions, rather than dextrose, because the dextrose-induced increase in insulin can acutely exacerbate hypokalemia. The peripheral intravenous dose is usually 20–40 mmol of K^+-Cl^- per liter; higher concentrations can cause localized pain from chemical phlebitis, irritation, and sclerosis. If hypokalemia is severe (<2.5 mmol/L) and/or critically symptomatic, intravenous K^+-Cl^- can be administered through a central vein with cardiac monitoring in an intensive care setting, at rates of 10–20 mmol/h; higher rates should be reserved for acutely life-threatening complications. The absolute amount of administered K^+ should be restricted (e.g., 20 mmol in 100 mL of saline solution) to prevent inadvertent infusion of a large dose.

Strategies to minimize K^+ losses should also be considered. These measures may include minimizing the dose of non-K^+-sparing diuretics, restricting Na^+ intake, and using clinically appropriate combinations of non-K^+-sparing and K^+-sparing medications (e.g., loop diuretics with ACE inhibitors).

HYPERKALEMIA

Hyperkalemia is defined as a plasma potassium level of 5.5 m*M*, occurring in up to 10% of hospitalized patients; severe hyperkalemia (>6.0 m*M*) occurs in ~1%, with a significantly increased risk of mortality. Although redistribution and reduced tissue uptake can acutely cause hyperkalemia, a decrease in renal K^+ excretion is the most frequent underlying cause (Table 56-5). Excessive intake of K^+ is a rare cause, given the adaptive capacity to increase renal secretion; however, dietary intake can have a major effect in susceptible patients, e.g., diabetics with hyporeninemic hypoaldosteronism and chronic kidney disease. Drugs that impact on the renin-angiotensin-aldosterone axis are also a major cause of hyperkalemia.

TABLE 56-5 Causes of Hyperkalemia

I. Pseudohyperkalemia
- A. Cellular efflux; thrombocytosis, erythrocytosis, leukocytosis, in vitro hemolysis
- B. Hereditary defects in red cell membrane transport

II. Intra- to extracellular shift
- A. Acidosis
- B. Hyperosmolality; radiocontrast, hypertonic dextrose, mannitol
- C. β_2-Adrenergic antagonists (noncardioselective agents)
- D. Digoxin and related glycosides (yellow oleander, foxglove, bufadienolide)
- E. Hyperkalemic periodic paralysis
- F. Lysine, arginine, and ε-aminocaproic acid (structurally similar, positively charged)
- G. Succinylcholine; thermal trauma, neuromuscular injury, disuse atrophy, mucositis, or prolonged immobilization
- H. Rapid tumor lysis

III. Inadequate excretion
- A. Inhibition of the renin-angiotensin-aldosterone axis; ↑ risk of hyperkalemia when used in combination
  1. Angiotensin-converting enzyme (ACE) inhibitors
  2. Renin inhibitors; aliskiren (in combination with ACE inhibitors or angiotensin receptor blockers [ARBs])
  3. ARBs
  4. Blockade of the mineralocorticoid receptor: spironolactone, eplerenone, drospirenone
  5. Blockade of the epithelial sodium channel (ENaC): amiloride, triamterene, trimethoprim, pentamidine, nafamostat
- B. Decreased distal delivery
  1. Congestive heart failure
  2. Volume depletion
- C. Hyporeninemic hypoaldosteronism
  1. Tubulointerstitial diseases: systemic lupus erythematosus (SLE), sickle cell anemia, obstructive uropathy
  2. Diabetes, diabetic nephropathy
  3. Drugs: nonsteroidal anti-inflammatory drugs (NSAIDs), cyclooxygenase 2 (COX2) inhibitors, β blockers, cyclosporine, tacrolimus
  4. Chronic kidney disease, advanced age
  5. Pseudohypoaldosteronism type II: defects in WNK1 or WNK4 kinases, Kelch-like 3 (KLHL3), or Cullin 3 (CUL3)
- D. Renal resistance to mineralocorticoid
  1. Tubulointerstitial diseases: SLE, amyloidosis, sickle cell anemia, obstructive uropathy, post–acute tubular necrosis
  2. Hereditary: pseudohypoaldosteronism type I; defects in the mineralocorticoid receptor *or* the epithelial sodium channel (ENaC)
- E. Advanced renal insufficiency
  1. Chronic kidney disease
  2. End-stage renal disease
  3. Acute oliguric kidney injury
- F. Primary adrenal insufficiency
  1. Autoimmune: Addison's disease, polyglandular endocrinopathy
  2. Infectious: HIV, cytomegalovirus, tuberculosis, disseminated fungal infection
  3. Infiltrative: amyloidosis, malignancy, metastatic cancer
  4. Drug-associated: heparin, low-molecular-weight heparin
  5. Hereditary: adrenal hypoplasia congenita, congenital lipoid adrenal hyperplasia, aldosterone synthase deficiency
  6. Adrenal hemorrhage or infarction, including in antiphospholipid syndrome

Pseudohyperkalemia Hyperkalemia should be distinguished from factitious hyperkalemia or "pseudohyperkalemia," an artifactual increase in serum K^+ due to the release of K^+ during or after venipuncture. Pseudohyperkalemia can occur in the setting of excessive muscle activity during venipuncture (e.g., fist clenching), a marked increase in cellular elements (thrombocytosis, leukocytosis, and/or erythrocytosis) with in vitro efflux of K^+, and acute anxiety during venipuncture with respiratory alkalosis and redistributive hyperkalemia. Cooling of blood following venipuncture is another cause, due to reduced cellular uptake; the converse is the increased uptake of K^+ by cells at high ambient temperatures, leading to normal values for hyperkalemic patients and/or to spurious hypokalemia in normokalemic patients. Finally, there are multiple genetic subtypes of hereditary pseudohyperkalemia, caused by increases in the passive K^+ permeability of erythrocytes. For example, causative mutations have been described in the red cell anion exchanger (AE1, encoded by the *SLC4A1* gene), leading to reduced red cell anion transport, hemolytic anemia, the acquisition of a novel AE1-mediated K^+ leak, and pseudohyperkalemia.

Redistribution and Hyperkalemia Several different mechanisms can induce an efflux of intracellular K^+ and hyperkalemia. Acidemia is associated with cellular uptake of H^+ and an associated efflux of K^+; it is thought that this effective K^+-H^+ exchange serves to help maintain extracellular pH. Notably, this effect of acidosis is limited to non–anion gap causes of metabolic acidosis and, to a lesser extent, respiratory causes of acidosis; hyperkalemia due to an acidosis-induced shift of potassium from the cells into the ECF does *not* occur in the anion gap acidoses lactic acidosis and ketoacidosis. Hyperkalemia due to hypertonic mannitol, hypertonic saline, and intravenous immune globulin is generally attributed to a "solvent drag" effect, as water moves out of cells along the osmotic gradient. Diabetics are also prone to osmotic hyperkalemia in response to intravenous hypertonic glucose, when given without adequate insulin. Cationic amino acids, specifically lysine, arginine, and the structurally related drug epsilon-aminocaproic acid, cause efflux of K^+ and hyperkalemia, through an effective cation-K^+ exchange of unknown identity and mechanism. Digoxin inhibits Na^+/K^+-ATPase and impairs the uptake of K^+ by skeletal muscle, such that digoxin overdose predictably results in hyperkalemia. Structurally related glycosides are found in specific plants (e.g., yellow oleander, foxglove) and in the cane toad, *Bufo marinus* (bufadienolide); ingestion of these substances and extracts thereof can also cause hyperkalemia. Finally, fluoride ions also inhibit Na^+/K^+-ATPase, such that fluoride poisoning is typically associated with hyperkalemia.

Succinylcholine depolarizes muscle cells, causing an efflux of K^+ through acetylcholine receptors (AChRs). The use of this agent is contraindicated in patients who have sustained thermal trauma, neuromuscular injury, disuse atrophy, mucositis, or prolonged immobilization. These disorders share a marked increase and redistribution of AChRs at the plasma membrane of muscle cells; depolarization of these upregulated AChRs by succinylcholine leads to an exaggerated efflux of K^+ through the receptor-associated cation channels, resulting in acute hyperkalemia.

Hyperkalemia Caused by Excess Intake or Tissue Necrosis Increased intake of even small amounts of K^+ may provoke severe hyperkalemia in patients with predisposing factors; hence, an assessment of dietary intake is crucial. Foods rich in potassium include tomatoes, bananas, and citrus fruits; occult sources of K^+, particularly K^+-containing salt substitutes, may also contribute significantly. Iatrogenic causes include simple overreplacement with K^+-Cl^- or the administration of a potassium-containing medication (e.g., K^+-penicillin) to a susceptible patient. Red cell transfusion is a well-described cause of hyperkalemia, typically in the setting of massive transfusions. Finally, severe tissue necrosis, as in acute tumor lysis syndrome and

rhabdomyolysis, will predictably cause hyperkalemia from the release of intracellular K^+.

Hypoaldosteronism and Hyperkalemia Aldosterone release from the adrenal gland may be reduced by hyporeninemic hypoaldosteronism, medications, primary hypoaldosteronism, or isolated deficiency of ACTH (secondary hypoaldosteronism). Primary hypoaldosteronism may be genetic or acquired **(Chap. 398)** but is commonly caused by autoimmunity, either in Addison's disease or in the context of a polyglandular endocrinopathy. HIV is a particularly important infectious cause of adrenal insufficiency. The adrenal involvement in HIV disease is usually subclinical; however, adrenal insufficiency may be precipitated by stress, drugs such as ketoconazole that inhibit steroidogenesis, or the acute withdrawal of steroid agents such as megestrol. Among medications associated with hyperkalemia, heparin preparations can cause selective inhibition of aldosterone synthesis by zona glomerulosa cells, leading to hyperreninemic hypoaldosteronism.

Hyporeninemic hypoaldosteronism is a very common predisposing factor in several overlapping subsets of hyperkalemic patients: diabetics, the elderly, and patients with renal insufficiency. Classically, patients should have suppressed PRA and aldosterone; ~50% have an associated acidosis, with a reduced renal excretion of NH_4^+, a positive urinary anion gap, and urine pH <5.5. Most patients are volume expanded, with secondary increases in circulating atrial natriuretic peptide (ANP) that inhibit both renal renin release and adrenal aldosterone release.

Renal Disease and Hyperkalemia Chronic kidney disease and end-stage kidney disease are very common causes of hyperkalemia, due to the associated deficit or absence of functioning nephrons. Hyperkalemia is more common in oliguric acute kidney injury; distal tubular flow rate and Na^+ delivery are less limiting factors in nonoliguric patients. Hyperkalemia out of proportion to GFR can also be seen in the context of tubulointerstitial disease that affects the distal nephron, such as amyloidosis, sickle cell anemia, interstitial nephritis, and obstructive uropathy.

Hereditary renal causes of hyperkalemia have overlapping clinical features with hypoaldosteronism, hence the diagnostic label *pseudohypoaldosteronism* (PHA). PHA type I (PHA-I) has both an autosomal recessive and an autosomal dominant form. The autosomal dominant form is due to loss-of-function mutations in the MLR; the recessive form is caused by various combinations of mutations in the three subunits of ENaC, resulting in impaired Na^+ channel activity in principal cells and other tissues. Patients with recessive PHA-I suffer from lifelong salt wasting, hypotension, and hyperkalemia, whereas the phenotype of autosomal dominant PHA-I due to MLR dysfunction improves in adulthood. PHA type II (PHA-II; also known as *hereditary hypertension with hyperkalemia*) is in every respect the mirror image of GS caused by loss of function in NCC, the thiazide-sensitive Na^+-Cl^- cotransporter (see above); the clinical phenotype includes hypertension, hyperkalemia, hyperchloremic metabolic acidosis, suppressed PRA and aldosterone, hypercalciuria, and reduced bone density. PHA-II thus behaves like a gain of function in NCC, and treatment with thiazides results in resolution of the entire clinical phenotype. However, the NCC gene is not directly involved in PHA-II, which is caused by mutations in the WNK1 and WNK4 serine-threonine kinases or the upstream Kelch-like 3 (KLHL3) and Cullin 3 (CUL3) proteins, two components of an E3 ubiquitin ligase complex that regulates these kinases; these proteins collectively regulate NCC activity, with PHA-II-associated activation of the transporter.

Medication-Associated Hyperkalemia Most medications associated with hyperkalemia cause inhibition of some component of the renin-angiotensin-aldosterone axis. ACE inhibitors, angiotensin receptor blockers, renin inhibitors, and MLRs are predictable and common causes of hyperkalemia, particularly when prescribed in combination. The oral contraceptive agent Yasmin-28 contains the progestin drospirenone, which inhibits the MLR and can cause hyperkalemia in susceptible patients. Cyclosporine, tacrolimus, NSAIDs, and cyclooxygenase 2 (COX2) inhibitors cause hyperkalemia by multiple mechanisms, but share the ability to cause hyporeninemic hypoaldosteronism. Notably, most drugs that affect the renin-angiotensin-aldosterone axis also block the local adrenal response to hyperkalemia, thus attenuating the *direct* stimulation of aldosterone release by increased plasma K^+ concentration.

Inhibition of apical ENaC activity in the distal nephron by amiloride and other K^+-sparing diuretics results in hyperkalemia, often with a voltage-dependent hyperchloremic acidosis and/or hypovolemic hyponatremia. Amiloride is structurally similar to the antibiotics TMP and pentamidine, which also block ENaC; risk factors for TMP-associated hyperkalemia include the administered dose, renal insufficiency, and hyporeninemic hypoaldosteronism. Indirect inhibition of ENaC at the plasma membrane is also a cause of drug-associated hyperkalemia; nafamostat, a protease inhibitor used in some countries for anticoagulation and for the management of pancreatitis, inhibits aldosterone-induced renal proteases that activate ENaC by proteolytic cleavage.

Clinical Features Hyperkalemia is a medical emergency due to its effects on the heart. Cardiac arrhythmias associated with hyperkalemia include sinus bradycardia, sinus arrest, slow idioventricular rhythms, ventricular tachycardia, ventricular fibrillation, and asystole. Mild increases in extracellular K^+ affect the repolarization phase of the cardiac action potential, resulting in changes in T-wave morphology; further increase in plasma K^+ concentration depresses intracardiac conduction, with progressive prolongation of the PR and QRS intervals. Severe hyperkalemia results in loss of the P wave and a progressive widening of the QRS complex; development of a sine-wave sinoventricular rhythm suggests impending ventricular fibrillation or asystole. Hyperkalemia can also cause a type I Brugada pattern in the electrocardiogram (ECG), with a pseudo–right bundle branch block and persistent coved ST-segment elevation in at least two precordial leads. This hyperkalemic Brugada's sign occurs in critically ill patients with severe hyperkalemia and can be differentiated from genetic Brugada's syndrome by an absence of P waves, marked QRS widening, and an abnormal QRS axis. Classically, the ECG manifestations in hyperkalemia progress from tall peaked T waves (5.5–6.5 m*M*), to a loss of P waves (6.5–7.5 m*M*), to a widened QRS complex (7.0–8.0 m*M*), and, ultimately, a to a sine wave pattern (>8.0 m*M*). However, these changes are notoriously insensitive, particularly in patients with chronic kidney disease or ESRD.

Hyperkalemia from a variety of causes can also present with ascending paralysis, denoted *secondary hyperkalemic paralysis* to differentiate it from familial hyperkalemic periodic paralysis (HYPP). The presentation may include diaphragmatic paralysis and respiratory failure. Patients with familial HYPP develop myopathic weakness during hyperkalemia induced by increased K^+ intake or rest after heavy exercise. Depolarization of skeletal muscle by hyperkalemia unmasks an inactivation defect in skeletal Na^+ channel; autosomal dominant mutations in the *SCN4A* gene encoding this channel are the predominant cause.

Within the kidney, hyperkalemia has negative effects on the ability to excrete an acid load, such that hyperkalemia per se can contribute to metabolic acidosis. This defect appears to be due in part to competition between K^+ and NH_4^+ for reabsorption by the TALH and subsequent countercurrent multiplication, ultimately reducing the medullary gradient for NH_3/NH_4 excretion by the distal nephron. Regardless of the underlying mechanism, restoration of normokalemia can, in many instances, correct hyperkalemic metabolic acidosis.

Diagnostic Approach The first priority in the management of hyperkalemia is to assess the need for emergency treatment, followed by a comprehensive workup to determine the cause **(Fig. 56-8)**. History and physical examination should focus on medications, diet and dietary supplements, risk factors for kidney failure, reduction in urine output, blood pressure, and volume status. Initial laboratory tests should include electrolytes, BUN, creatinine, serum osmolality, Mg^{2+} and Ca^{2+}, a complete blood count, and urinary pH, osmolality, creatinine, and electrolytes. A urine Na^+ concentration of <20 m*M* indicates that distal Na^+ delivery is a limiting factor in K^+ excretion; volume

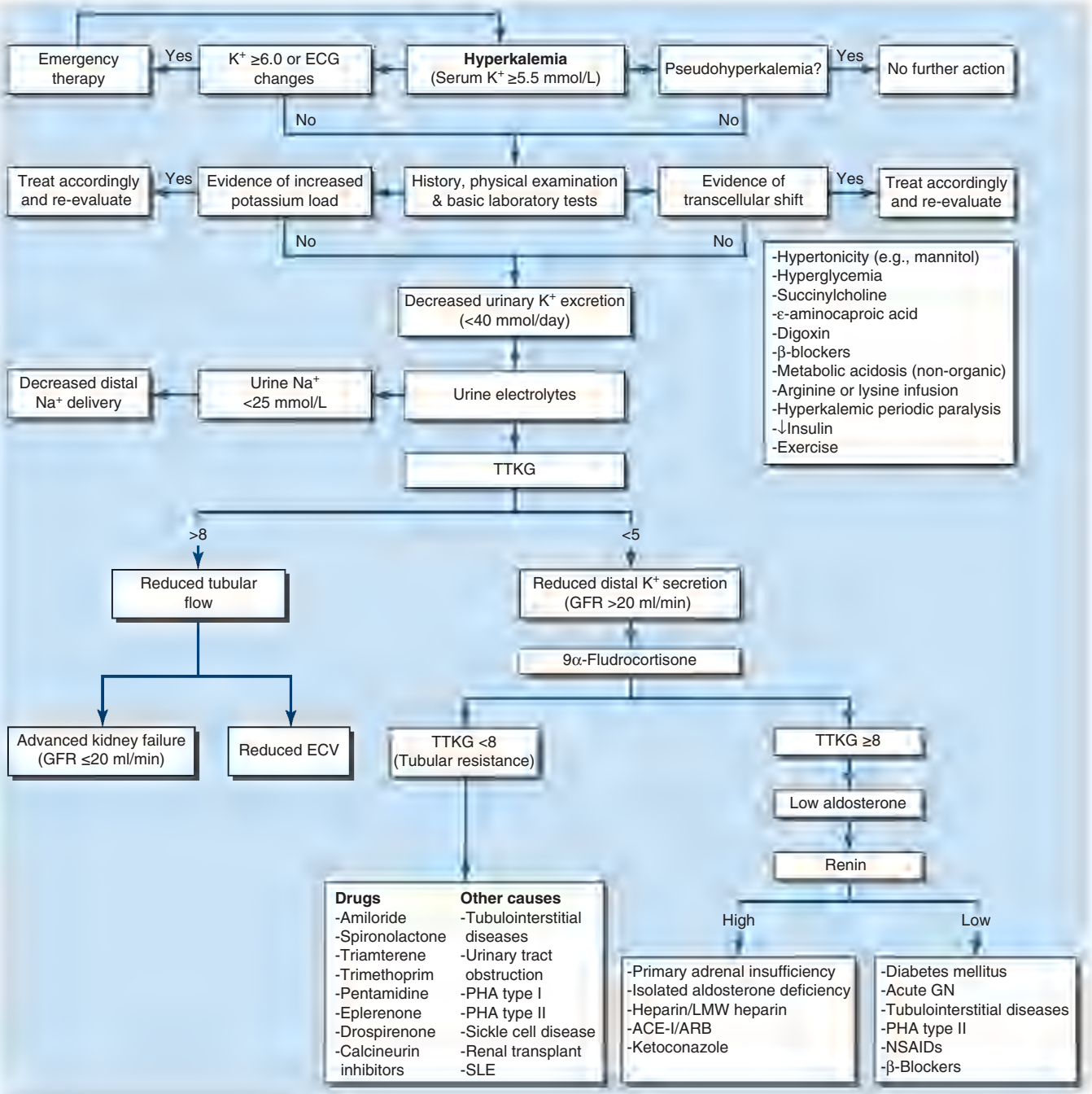

FIGURE 56-8 The diagnostic approach to hyperkalemia. See text for details. ACE-I, angiotensin-converting enzyme inhibitor; ARB, angiotensin II receptor blocker; CCD, cortical collecting duct; ECG, electrocardiogram; ECV, effective circulatory volume; GFR, glomerular filtration rate; GN, glomerulonephritis; HIV, human immunodeficiency virus; LMW heparin, low-molecular-weight heparin; NSAIDs, nonsteroidal anti-inflammatory drugs; PHA, pseudohypoaldosteronism; SLE, systemic lupus erythematosus; TTKG, transtubular potassium gradient. *(Reproduced with permission from DB Mount, K Zandi-Nejad: Disorders of potassium balance, in BM Brenner [ed], Brenner and Rector's The Kidney, 8th ed, Philadelphia, W.B. Saunders & Company, 2008.)*

repletion with 0.9% saline or treatment with furosemide may be effective in reducing plasma K^+ concentration. Serum and urine osmolality are required for calculation of the transtubular K^+ gradient (TTKG) (Fig. 56-8). The expected values of the TTKG are largely based on historical data, and are <3 in the presence of hypokalemia and >7–8 in the presence of hyperkalemia. Notably, some authors have opined that the TTKG does not consider the effects of distal tubular urea reabsorption on potassium excretion, concluding that the TTKG is, thus, an unreliable test in the assessment of hyperkalemia. These criticisms are theoretical and not supported by animal experiments; the TTKG remains a helpful bedside test of urinary potassium excretion in hyperkalemia.

$$\text{TTKG} = \frac{[K^+]_{urine} \times Osm_{serum}}{[K^+]_{serum} \times Osm_{urine}}$$

TREATMENT

Hyperkalemia

ECG manifestations of hyperkalemia should be considered a medical emergency and treated urgently. However, patients with significant hyperkalemia (plasma K^+ concentration ≥6.5 m*M*) in the absence of ECG changes should also be aggressively managed, given the limitations of ECG changes as a predictor of cardiac toxicity. Urgent management of hyperkalemia includes admission to the hospital, continuous cardiac monitoring, and immediate treatment. The treatment of hyperkalemia is divided into three stages:

1. *Immediate antagonism of the cardiac effects of hyperkalemia.* Intravenous calcium serves to protect the heart, whereas other

measures are taken to correct hyperkalemia. Calcium raises the action potential threshold and reduces excitability, without changing the resting membrane potential. By restoring the difference between resting and threshold potentials, calcium reverses the depolarization blockade due to hyperkalemia. The recommended dose is 10 mL of 10% calcium gluconate (3–4 mL of calcium chloride), infused intravenously over 2–3 min with cardiac monitoring. The effect of the infusion starts in 1–3 min and lasts 30–60 min; the dose should be repeated if there is no change in ECG findings or if they recur after initial improvement. Hypercalcemia potentiates the cardiac toxicity of digoxin; hence, intravenous calcium should be used with extreme caution in patients taking this medication; if judged necessary, 10 mL of 10% calcium gluconate can be added to 100 mL of 5% dextrose in water and infused over 20–30 min to avoid acute hypercalcemia.

2. *Rapid reduction in plasma K^+ concentration by redistribution into cells.* Insulin lowers plasma K^+ concentration by shifting K^+ into cells. The recommended dose is 10 units of intravenous regular insulin followed immediately by 50 mL of 50% dextrose ($D_{50}W$, 25 g of glucose total); the effect begins in 10–20 min, peaks at 30–60 min, and lasts for 4–6 h. Bolus $D_{50}W$ without insulin is *never* appropriate, given the risk of acutely worsening hyperkalemia due to the osmotic effect of hypertonic glucose. Hypoglycemia is common with insulin plus glucose; hence, this should be followed by an infusion of 10% dextrose at 50–75 mL/h, with close monitoring of plasma glucose concentration. In hyperkalemic patients with glucose concentrations of ≥200–250 mg/dL, insulin should be administered *without* glucose, again with close monitoring of glucose concentrations.

   β_2-Agonists, most commonly albuterol, are effective but underused agents for the acute management of hyperkalemia. Albuterol and insulin with glucose have an additive effect on plasma K^+ concentration; however, ~20% of patients with ESRD are resistant to the effect of β_2-agonists; hence, these drugs should not be used without insulin. The recommended dose for inhaled albuterol is 10–20 mg of nebulized albuterol in 4 mL of normal saline, inhaled over 10 min; the effect starts at about 30 min, reaches its peak at about 90 min, and lasts for 2–6 h. Hyperglycemia is a side effect, along with tachycardia. β_2-Agonists should be used with caution in hyperkalemic patients with known cardiac disease.

   Intravenous bicarbonate has no role in the acute treatment of hyperkalemia but may slowly attenuate hyperkalemia with sustained administration over several hours. It should not be given repeatedly as a hypertonic intravenous bolus of undiluted ampules, given the risk of associated hypernatremia and hypertonicity, but should instead be infused in an isotonic or hypotonic fluid (e.g., 150 milliequivalents of sodium bicarbonate in 1 L of D_5W). In patients with metabolic acidosis, a delayed drop in plasma K^+ concentration can be seen after 4–6 h of isotonic bicarbonate infusion.

3. *Removal of potassium.* This is typically accomplished using cation exchange resins, diuretics, and/or dialysis. The cation exchange resin sodium polystyrene sulfonate (SPS) exchanges Na^+ for K^+ in the gastrointestinal tract and increases the fecal excretion of K^+. The recommended dose of SPS is 15–30 g of powder, almost always given in a premade suspension with 33% sorbitol. The effect of SPS on plasma K^+ concentration is slow; the full effect may take up to 24 h and usually requires repeated doses every 4–6 h. Intestinal necrosis, typically of the colon or ileum, is a rare but usually fatal complication of SPS. Intestinal necrosis is more common in patients with reduced intestinal motility (e.g., in the postoperative state or after treatment with opioids). The coadministration of SPS with sorbitol appears to increase the risk of intestinal necrosis; however, this complication can also occur with SPS alone, and in animal models, SPS is the causative agent. The low but real risk of intestinal necrosis with SPS, which can sometimes be the only available or appropriate therapy for the removal of potassium, must be weighed against the delayed onset of efficacy. Whenever possible, alternative therapies for the acute management of hyperkalemia (i.e., alternative potassium binders, aggressive redistributive therapy, isotonic bicarbonate infusion, diuretics, and/or hemodialysis) should be used instead of SPS.

   Two other intestinal potassium binders are available for the management of hyperkalemia. These agents lack the intestinal toxicity of SPS and are preferred over SPS for the management of hyperkalemia. Patiromer is a nonabsorbed polymer provided as a powder for suspension, which binds K^+ in exchange for Ca^{2+}. In healthy adults, patiromer causes a decrease in urinary potassium, magnesium, and sodium excretion, suggesting the binding of the polymer to these cations in the intestine; notably, a major side effect of the medication is hypomagnesemia. Sodium zirconium cyclosilicate is an inorganic, nonabsorbable crystalline compound that exchanges both Na^+ and H^+ ions in exchange for K^+ and NH_4^+ in the intestine. These agents have revolutionized the management of both chronic and acute hyperkalemia. In particular, the availability of safe, well-tolerated potassium binders allows for greater intensity of renin-angiotensin-aldosterone system inhibition in both renal and cardiac disease.

   Therapy with intravenous saline may be beneficial in hypovolemic patients with oliguria and decreased distal delivery of Na^+, with the associated reductions in renal K^+ excretion. Loop and thiazide diuretics can be used to reduce plasma K^+ concentration in volume-replete or hypervolemic patients with sufficient renal function for a diuretic response; this may need to be combined with intravenous saline or isotonic bicarbonate to achieve or maintain euvolemia.

   Hemodialysis is the most effective and reliable method to reduce plasma K^+ concentration; peritoneal dialysis is considerably less effective. Patients with acute kidney injury require temporary, urgent venous access for hemodialysis, with the attendant risks; in contrast, patients with ESRD or advanced chronic kidney disease may have a preexisting venous access. The amount of K^+ removed during hemodialysis depends on the relative distribution of K^+ between ICF and ECF (potentially affected by prior therapy for hyperkalemia), the type and surface area of the dialyzer used, dialysate and blood flow rates, dialysate flow rate, dialysis duration, and the plasma-to-dialysate K^+ gradient.

FURTHER READING

Choi M et al: K^+ channel mutations in adrenal aldosterone-producing adenomas and hereditary hypertension. Science 331:768, 2011.

Clase KM et al: Potassium homeostasis and management of dyskalemia in kidney diseases: conclusions from a Kidney Disease: Improving Global Outcomes (KDIGO) Controversies Conference. Kidney Int 97:42, 2020.

Fenske W et al: A copeptin-based approach in the diagnosis of diabetes insipidus. N Engl J Med 379:428, 2018.

Gankam-Kengne F et al: Osmotic stress–induced defective glial proteostasis contributes to brain demyelination after hyponatremia treatment. J Am Soc Nephrol 28:1802, 2017.

Mount DB: Disorders of potassium balance, in *Brenner and Rector's The Kidney*, 11th ed, ASL Yu et al: (eds). Philadelphia, W.B. Saunders & Company, 2020, pp. 537–579.

Packham DK et al: Sodium zirconium cyclosilicate in hyperkalemia. N Engl J Med 372:222, 2015.

Perianayagam A et al: DDAVP is effective in preventing and reversing inadvertent overcorrection of hyponatremia. Clin J Am Soc Nephrol 3:331, 2008.

Rondon-Berrios H, Sterns RH: Hypertonic saline for hyponatremia: Meeting goals and avoiding harm. Am J Kidney Dis 79:890, 2022.

Soupart A et al: Efficacy and tolerance of urea compared with vaptans for long-term treatment of patients with SIADH. Clin J Am Soc Nephrol 7:742, 2012.

Turcu AF et al: Primary aldosteronism: A multidimensional syndrome. Nat Rev Endocrinol 18:665, 2022.

57 Hypercalcemia and Hypocalcemia

Dwight A. Towler

Calcium is the most abundant mineral in the human body, fulfilling numerous physiological functions. These functions include providing fundamental structure and strength of the skeleton [as the solid hydroxyapatite salt $Ca_{10}(PO_4)_6(OH)_2$]; cellular signaling and hormone secretion; cardiac pacemaker rhythmicity and contractility; skeletal muscle contractility; immune function; and neural signaling, among others. Given these and other vital biological functions, intracellular and extracellular calcium concentrations are tightly regulated on timescales of milliseconds (intracellular) to minutes–hours (extracellular), with the former very dynamic and the latter very stable as necessary for health.

Serum calcium concentrations are maintained within an exquisitely narrow range through feedback mechanisms that involve parathyroid hormone (PTH) and the vitamin D metabolites 1,25-dihydroxyvitamin D [$1,25(OH)_2D$] and 25-hydroxyvitamin D [25(OH)D]. PTH increases osteocyte production of RANKL, a potent stimulus for osteoclast-mediated bone resorption that mobilizes skeletal calcium. These feedback mechanisms integrate signals between the parathyroid glands, kidney, intestine, and bone to control circulating extracellular calcium (Fig. 57-1; Chap. 421).

Disorders of serum calcium concentration are very common, arising from primary or secondary perturbations in the calciotropic functions. Disease manifestations reflect not only the impact of acute calcium changes on organ function, but also the impact of chronic compensatory responses that come with clinical consequences (e.g., osteoporosis, nephrocalcinosis). This chapter provides a brief summary of the approach to patients with altered serum calcium levels. See Chap. 422 for a detailed discussion of this topic.

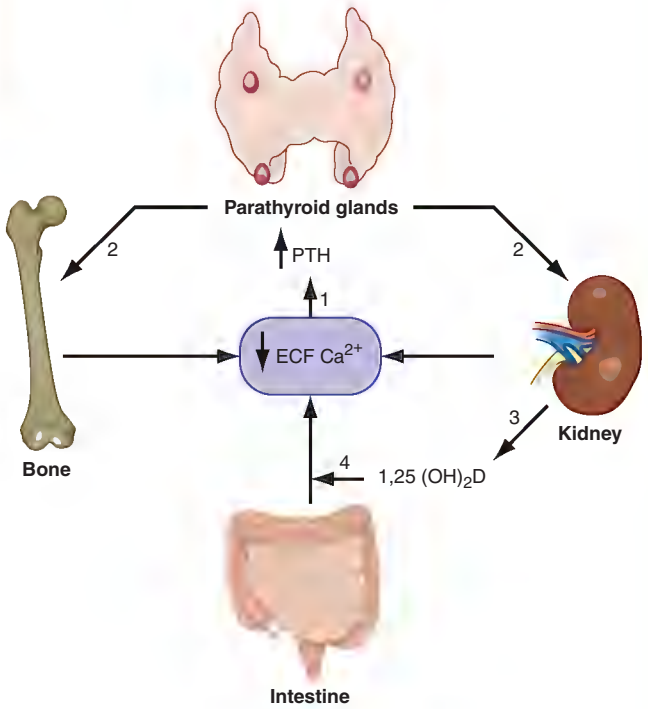

FIGURE 57-1 Homeostatic feedback mechanisms maintain extracellular calcium concentrations within a narrow physiologic range, typically 8.5–10.5 mg/dL (2.1–2.6 m*M*) (reference values vary slightly by lab). A decrease in extracellular (ECF) calcium (Ca^{2+}) triggers an increase in parathyroid hormone (PTH) secretion (1) via the calcium sensor receptor (CaSR) on parathyroid chief cells. PTH, in turn, increases resorption of calcium from bone (2, left) and distal renal tubule reabsorption of filtered urinary calcium (2, right), and also stimulates renal proximal tubule $1,25(OH)_2D$ production (3). Circulating $1,25(OH)_2D$ acts on the small intestine to increase dietary calcium absorption (4). Collectively, these homeostatic mechanisms defend against life-threatening hypocalcemia and serve to restore serum calcium levels to normal.

HYPERCALCEMIA

ETIOLOGY

The causes of hypercalcemia can be understood based on derangements in the normal feedback mechanisms that regulate serum calcium (Table 57-1). Primary hyperparathyroidism and malignancy are the two most common causes of hypercalcemia, although other diseases must be considered (Table 57-2). Excess PTH production, which is not appropriately suppressed by increased serum calcium concentrations, occurs in primary hyperparathyroidism (pHPT). pHPT is almost always due to a nonmalignant neoplastic disorder of the parathyroid glands (a parathyroid adenoma or parathyroid hyperplasia) that is associated with increased parathyroid cell mass and impaired feedback

TABLE 57-1 Causes of Hypercalcemia

- Excessive PTH production
  - Primary hyperparathyroidism
    - Sporadic or familial (e.g., MEN) parathyroid adenoma or hyperplasia
    - Rarely parathyroid carcinoma
  - Tertiary hyperparathyroidism (long-term stimulation of PTH secretion in renal insufficiency)
  - Ectopic PTH secretion (very rare)
  - FHH (mutations reducing CaSR signaling)
  - Nongenetic alterations in CaSR function (lithium therapy, rare CaSR inhibitory autoantibodies)
- Hypercalcemia of malignancy
  - Overproduction of PTHrP (many solid tumors)
  - Lytic skeletal metastases (breast, myeloma)
- Excessive $1,25(OH)_2D$ production (by constitutive macrophage CYP27B1 activity)
  - Granulomatous diseases (many causes: sarcoidosis, tuberculosis, leprosy, fungal infections, foreign body reaction)
  - Lymphomas (B cell, cutaneous T cell/Sezary syndrome)
- Vitamin D intoxication
  - Ingestion of excessive vitamin D: 25(OH)D
  - Ingestion of excessive $1,25(OH)_2D$ (calcitriol) or 1-alpha-hydroxylated vitamin D analogues
  - Reduced vitamin D catabolism due to CYP24A1 deficiency
- Primary increase in bone resorption
  - Hyperthyroidism
  - Paget's disease of bone
  - Immobilization
  - Ketogenic diet (in treatment of children with refractory epilepsy, uncommon)
- Excessive calcium intake
  - Milk-alkali syndrome
  - Total parenteral nutrition
- Other causes
  - Endocrine disorders (adrenal insufficiency, pheochromocytoma, acromegaly, VIPoma)
  - Medications (thiazides, vitamin A, lithium, foscarnet, teriparatide, aromatase inhibitors)
  - Discontinuation of denosumab with rebound resorption
  - Recovery phase of rhabdomyolysis with renal failure
  - Williams-Beuren syndrome
  - Excessive mammary PTHrP production with pregnancy or lactation (rare)
  - Pseudohypercalcemia (e.g., calcium-binding IgM in Waldenström's macroglobulinemia)

Abbreviations: CaSR, calcium sensor receptor; FHH, familial hypocalciuric hypercalcemia; MEN, multiple endocrine neoplasia; PTH, parathyroid hormone; PTHrP, PTH-related peptide.