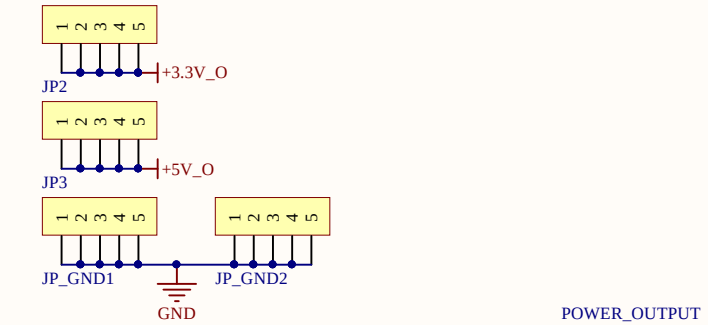

POWER_OUTPUT

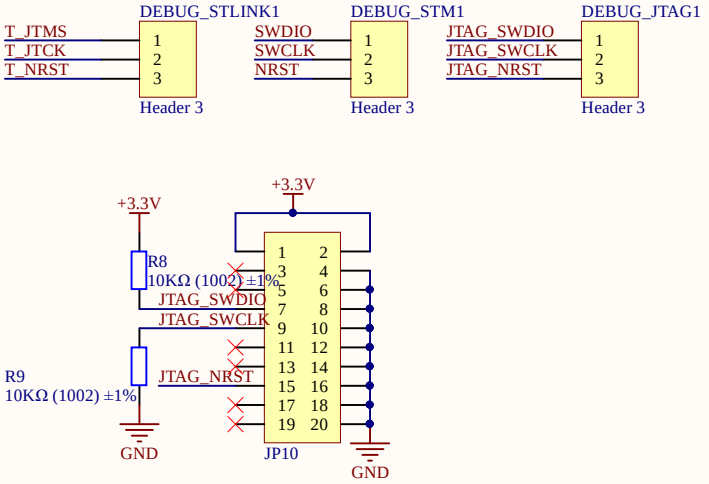

DEBUG_Select

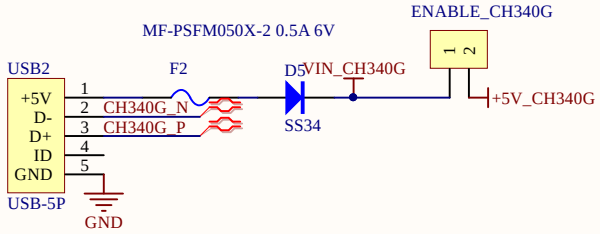

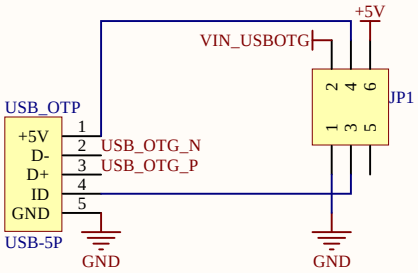

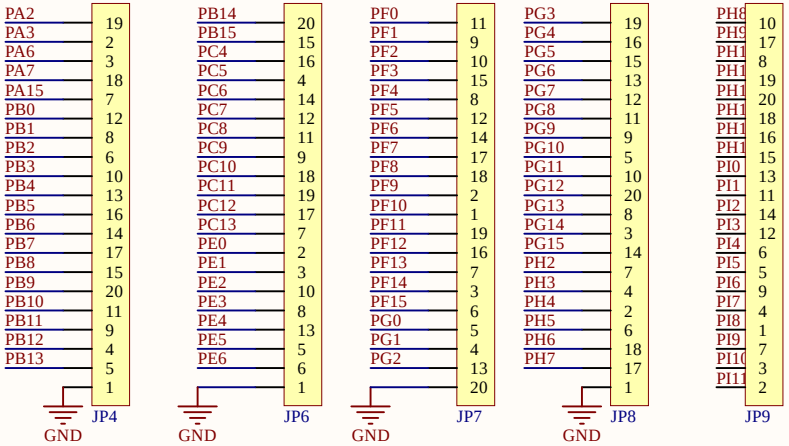

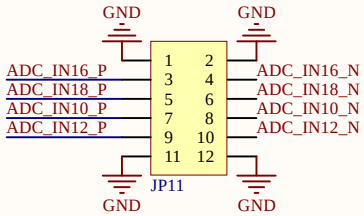

Title		
Size A4	Number	Revision
Date: 2018/12/18	Sheet of	
File: C:\Users\..\CONNECTOR.SchDoc	Drawn By:	

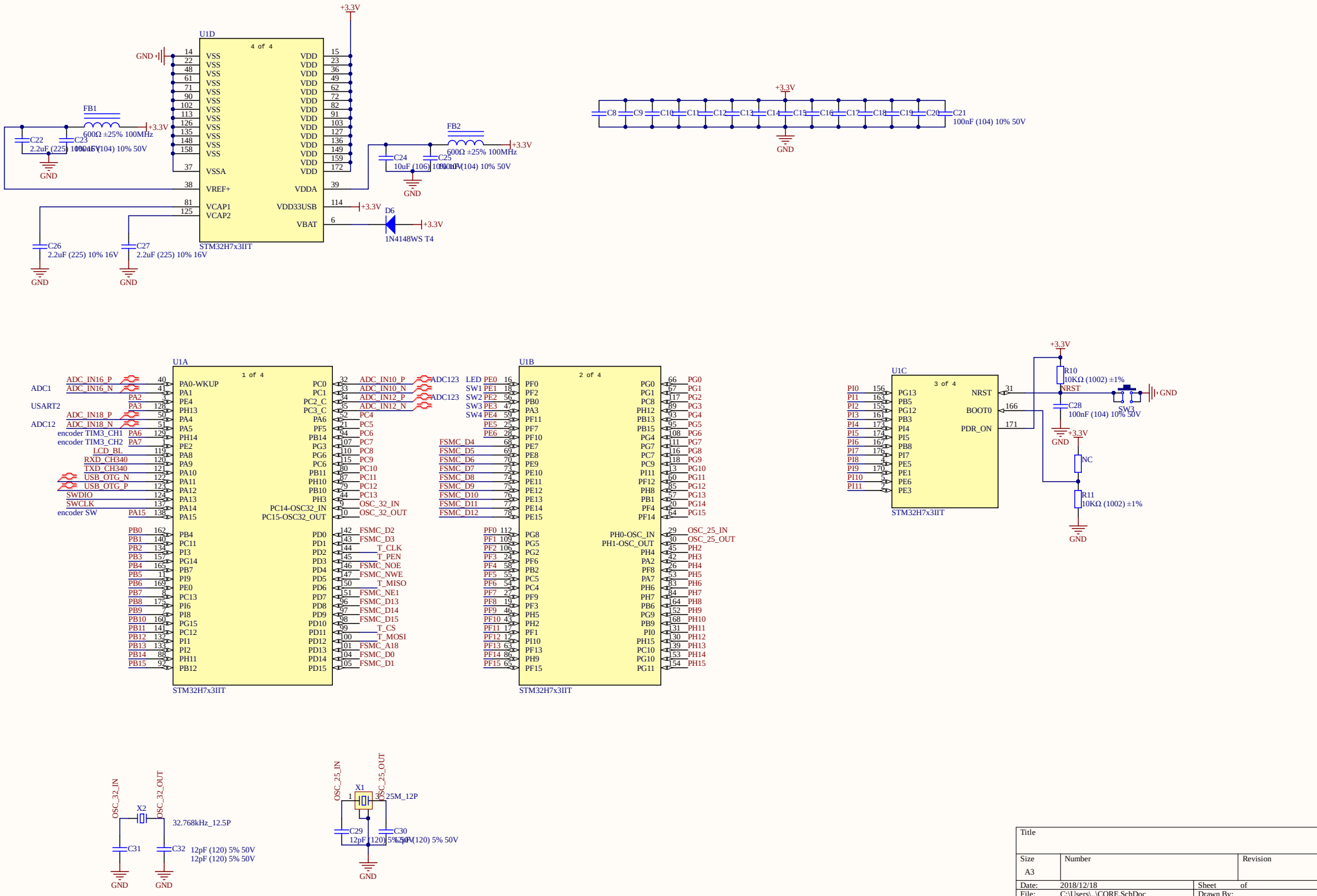
U1D
4 of 4
STM32H7x3IIT
FB1
FB2
600Ω ±25% 100MHz
C22
C23
C24
C25
C26
C27
2.2uF (225) 10% 16V
10uF (106) 10% 6.3V
100nF (104) 10% 50V
+3.3V
GND
D6
1N4148WS T4
C8
C9
C10
C11
C12
C13
C14
C15
C16
C17
C18
C19
C20
C21
U1A
1 of 4
U1B
2 of 4
U1C
3 of 4
R10
10KΩ (1002) ±1%
R11
C28
NC
SW3
X1
X2
25M_12P
32.768kHz_12.5P
C29
C30
C31
C32
12pF (120) 5% 50V
OSC_25_IN
OSC_25_OUT
OSC_32_IN
OSC_32_OUT
ADC_IN16_P
ADC_IN16_N
ADC_IN18_P
ADC_IN18_N
ADC_IN10_P
ADC_IN10_N
ADC_IN12_P
ADC_IN12_N
ADC123
USB_OTG_N
USB_OTG_P
SWDIO
SWCLK
LCD_BL
RXD_CH340
TXD_CH340
encoder TIM3_CH1
encoder TIM3_CH2
encoder SW
FSMC_D0
FSMC_D1
FSMC_D2
FSMC_D3
FSMC_D4
FSMC_D5
FSMC_D6
FSMC_D7
FSMC_D8
FSMC_D9
FSMC_D10
FSMC_D11
FSMC_D12
FSMC_D14
FSMC_D15
FSMC_A18
FSMC_NOE
FSMC_NWE
FSMC_NE1
T_CLK
T_PEN
T_MISO
T_MOSI
T_CS
LED
SW1
SW2
SW3
SW4
NRST
BOOT0
PDR_ON
Title
Size
A3
Number
Revision
Date:
2018/12/18
Sheet
of
File:
C:\Users\..\CORE.SchDoc
Drawn By:

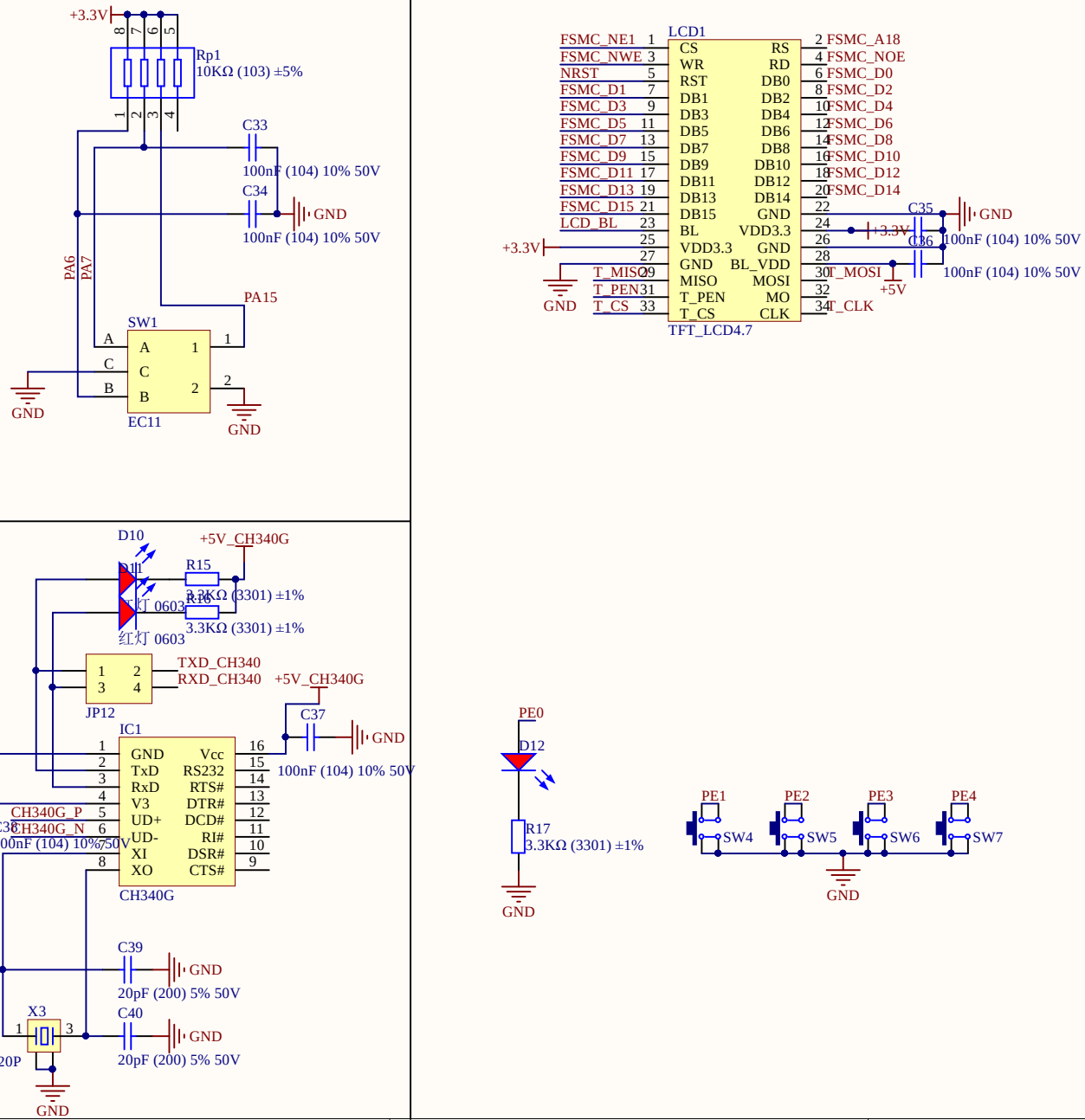

Title		
Size A4	Number	Revision
Date: 2018/12/18	Sheet of	
File: C:\Users\..\DEVICE.SchDoc	Drawn By:	

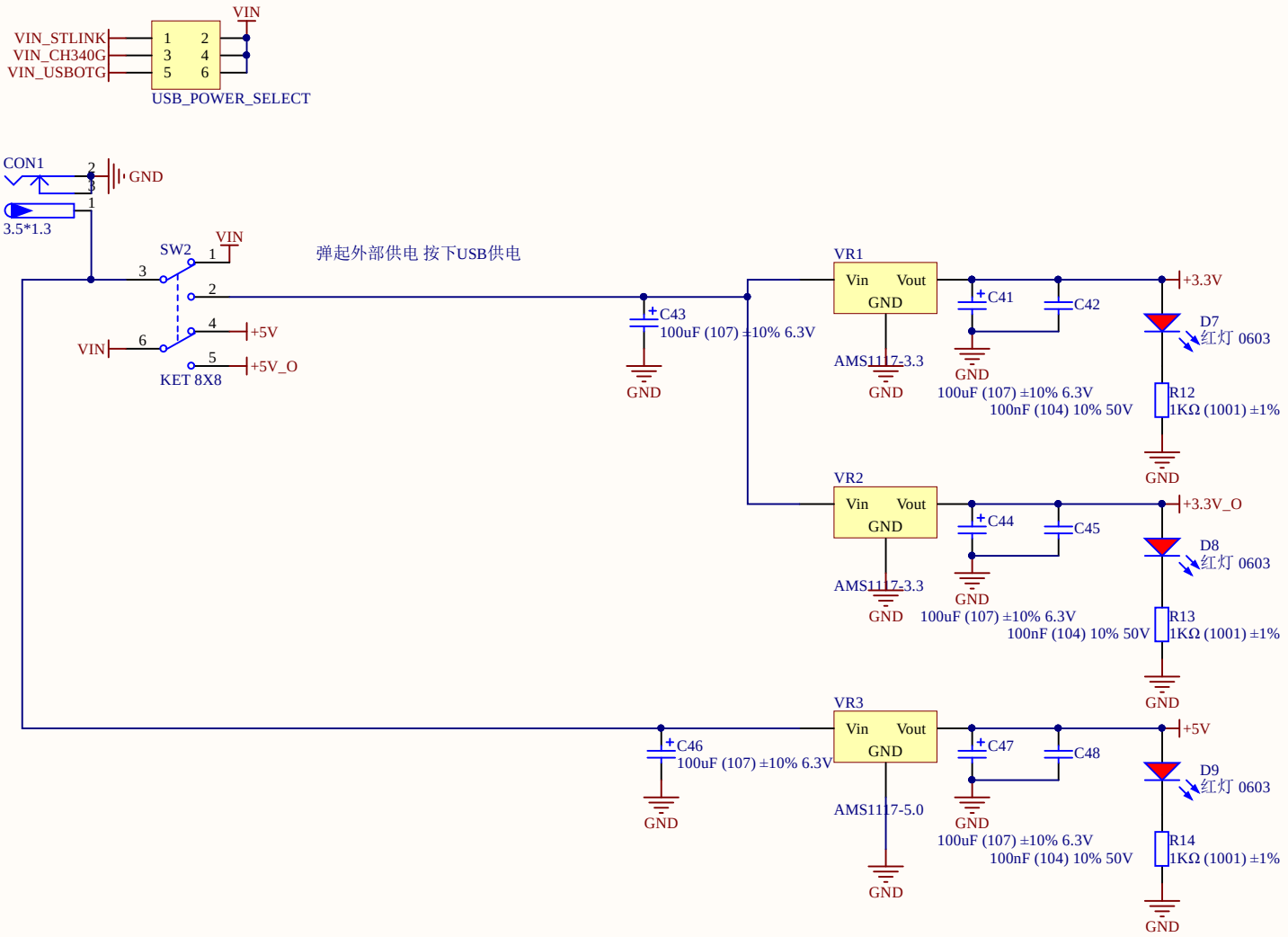

Title		
Size A4	Number	Revision
Date: 2018/12/18		Sheet of
File: C:\Users\..\POWER.SchDoc		Drawn By:

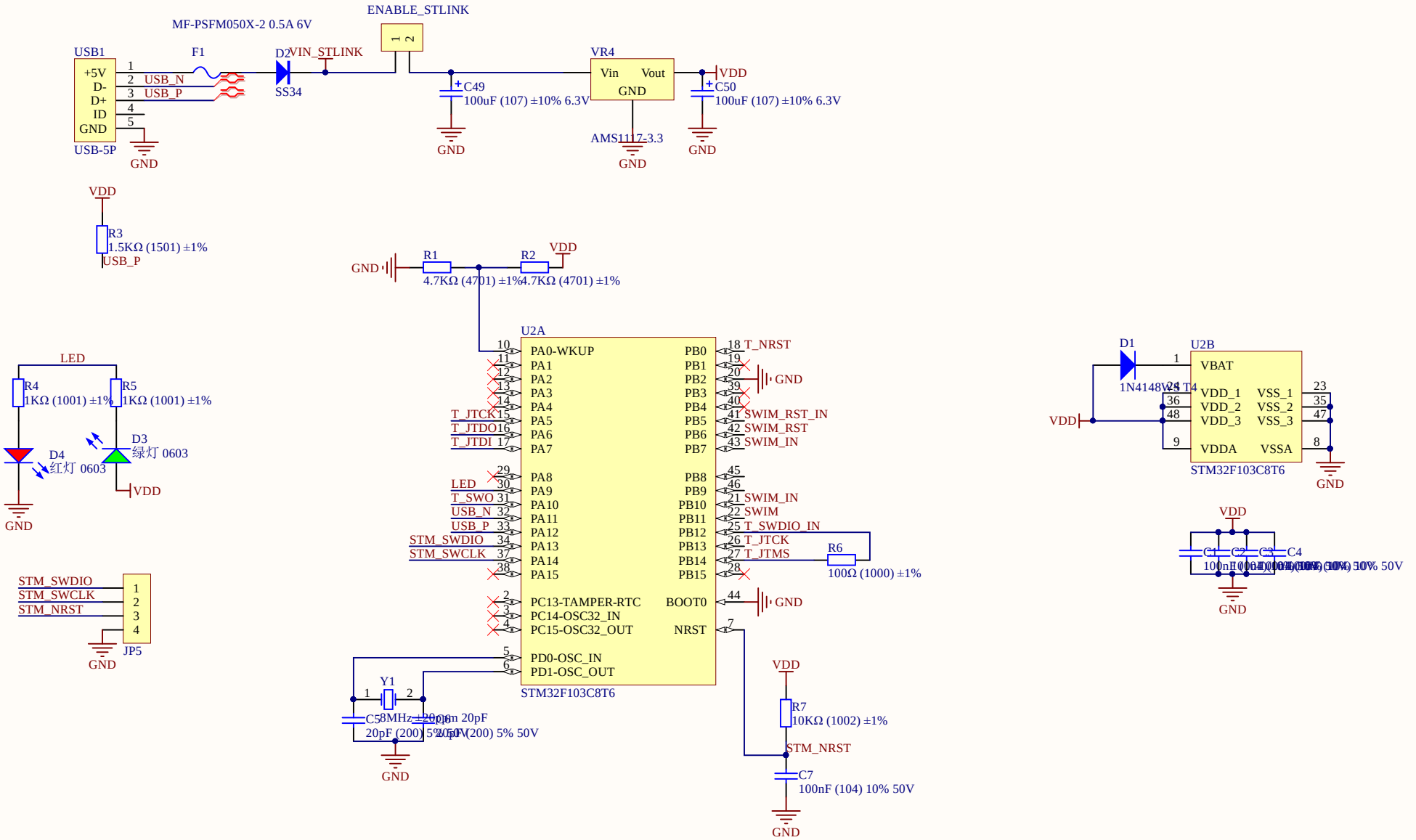

Title		
Size A4	Number	Revision
Date: 2018/12/18		Sheet of
File: C:\Users\..\ST-LINK.SchDoc		Drawn By:

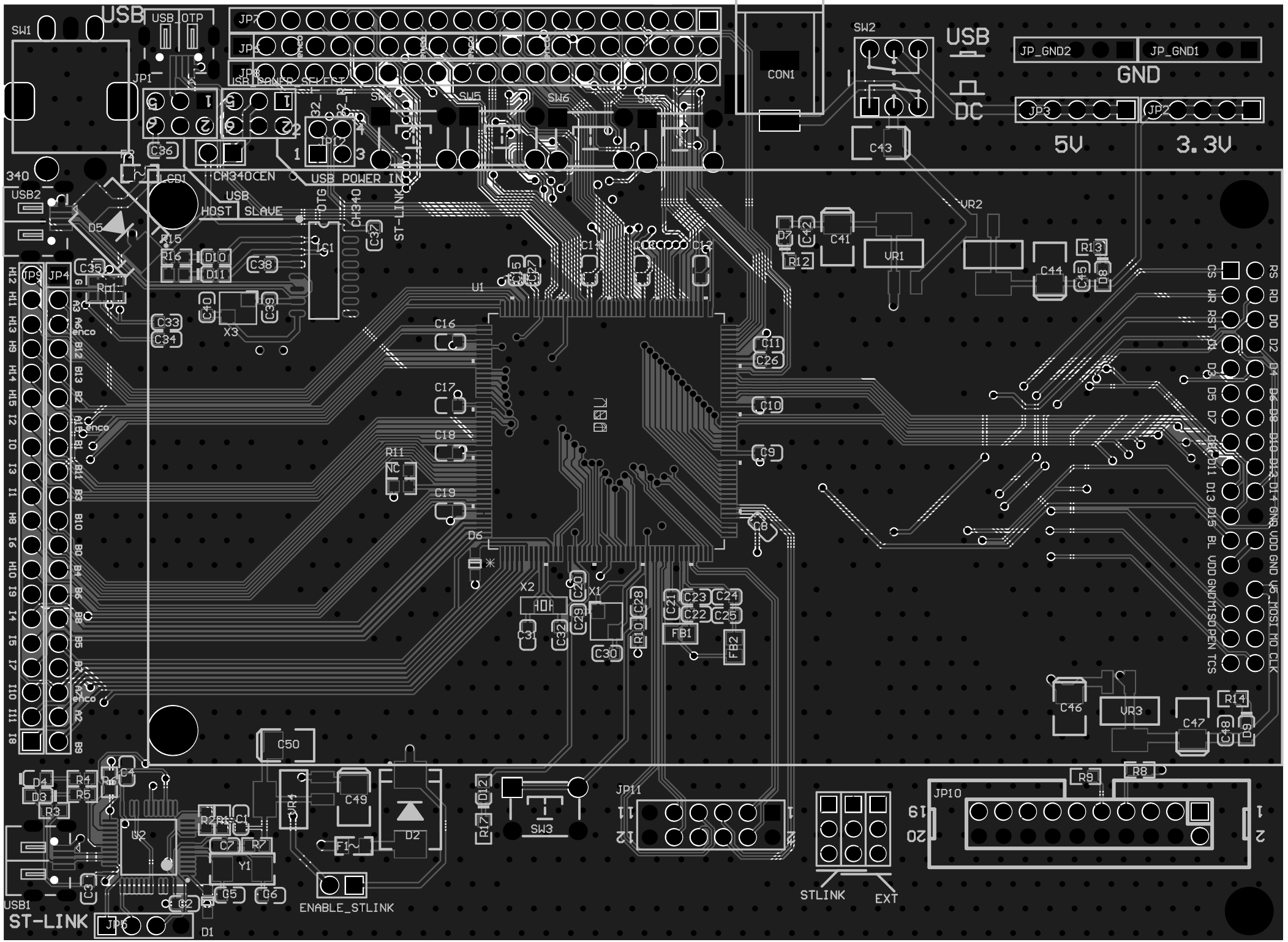
USB
USB_OTP
JP7
JP6
JP8
USB POWER SELECT
SW1
JP1
SW4
SW5
SW6
SW7
CON1
SW2
USB
DC
JP_GND2
JP_GND1
GND
JP3
JP2
5V
3.3V
C43
C36
CH340CEN
USB POWER IN
USB
HOST
SLAVE
OTG
CH340
ST-LINK
340
USB2
D5
R15
R16
D10
D11
C38
C37
IC1
C35
JP9
JP4
Rp1
C40
C39
X3
C33
C34
U1
C16
C17
C18
R11
NC
C19
D6
C14
C15
C27
C12
D7
C42
C41
R12
VR1
VR2
C44
R13
C45
D8
C11
C26
C10
C9
C8
X2
X1
C20
C29
C28
C21
C23
C24
C22
C25
C31
C32
C30
R10
FB1
FB2
CS
WR
RST
D1
D3
D5
D7
D9
D11
D13
D15
BL
VDD
GND
MISO
PEN
TCS
RS
RD
D0
D2
D4
D6
D8
D10
D12
D14
GND
VDD
GND
V5_MOSI
MO
CLK
C46
VR3
C47
R14
C48
D9
C50
D4
R4
R6
C4
D3
R5
R3
U2
R2
R1
C1
C7
R7
Y1
C3
C5
C6
C2
D1
USB1
ST-LINK
JP6
VR4
C49
D2
F1
ENABLE_STLINK
D12
R17
SW3
JP11
STLINK
EXT
JP10
R9
R8

Board St