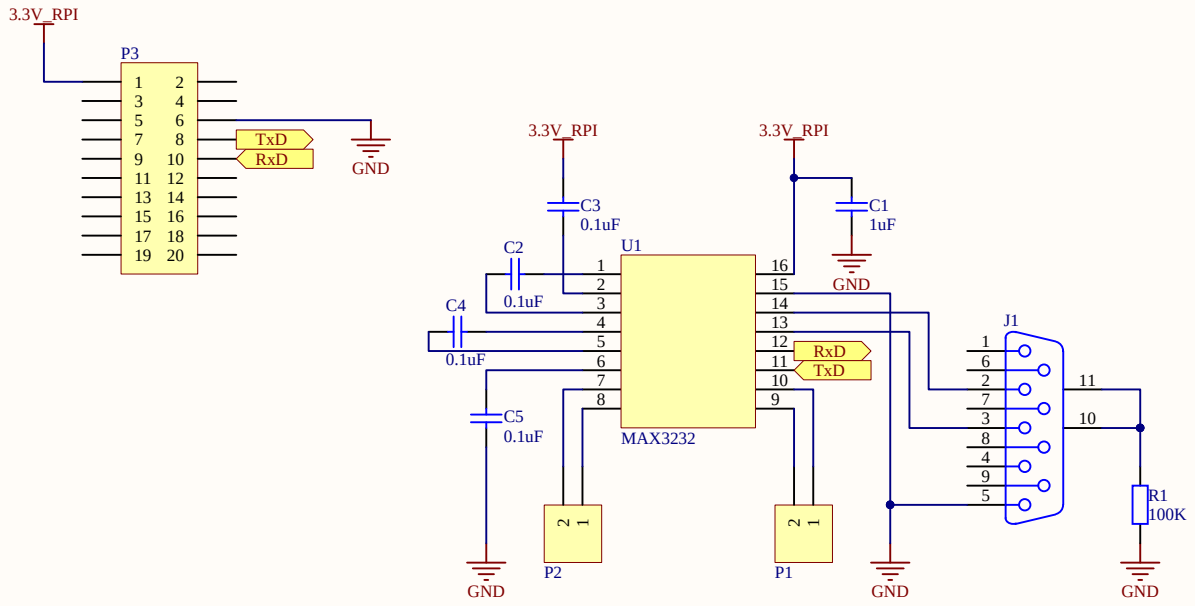

Title		
Size A4	Number	Revision
Date: 01.03.2013	Sheet of	
File: C:\Users\..\RPI RS232 - schematic.SchDoc	Drawn By:	