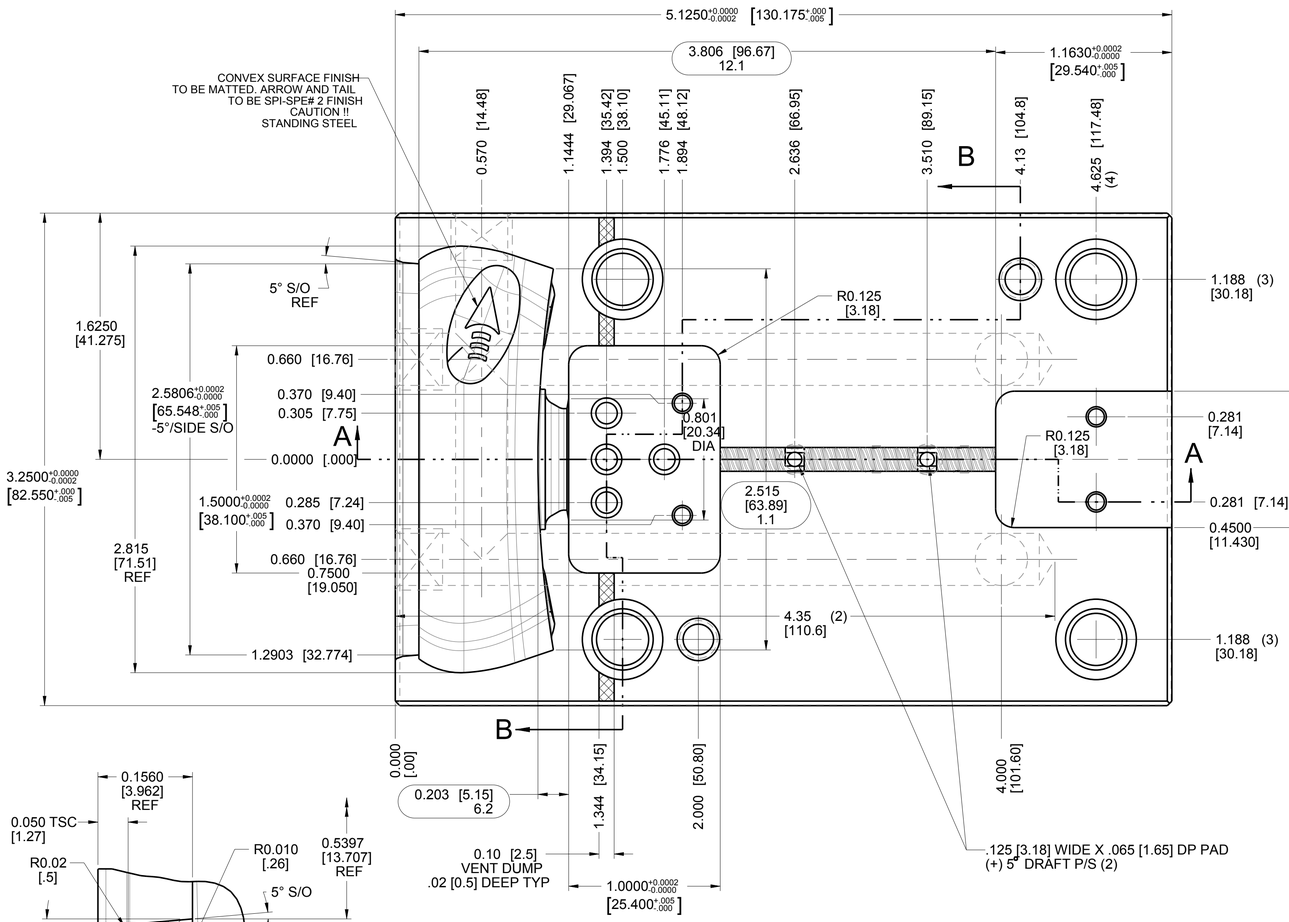

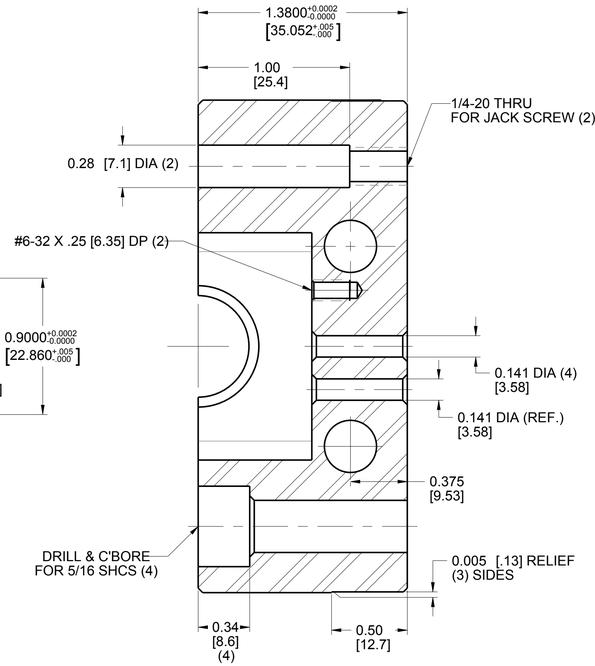

SECTION B-B

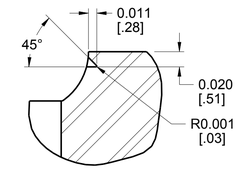

SECTION C-C
SCALE 10:1

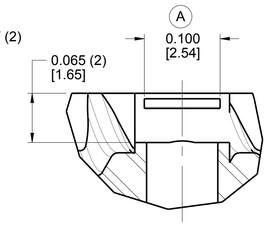

DETAIL A
SCALE 10:1

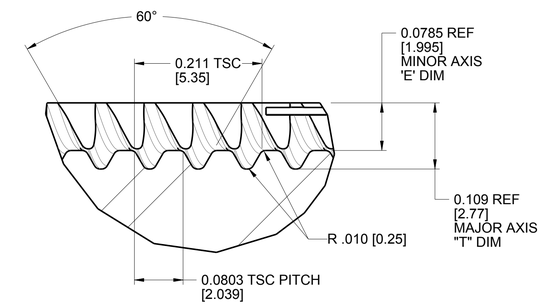

DETAIL THREAD DATA
SCALE 8:1

DOUBLE LEAD
LEFT HAND THREAD

"T" = .218 [5.54] DIA	3.1
"E" = .157 [3.99] DIA	4.1

LEAD = .1604 [4.074]
PITCH = .0803 [2.040]

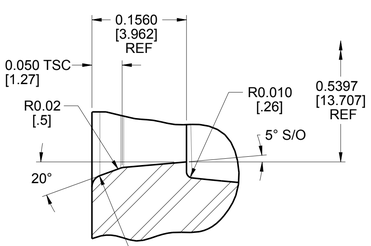

DETAIL Z
SCALE 8:1

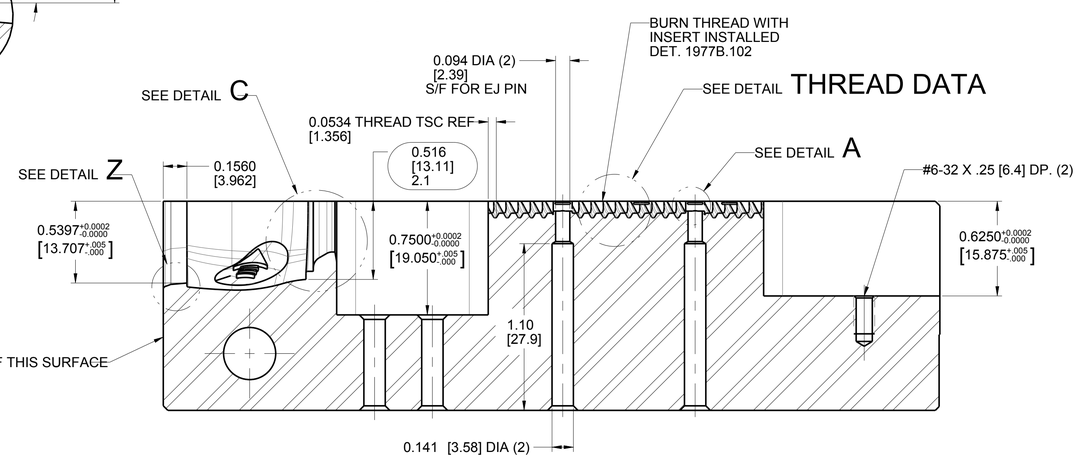

SECTION A-A

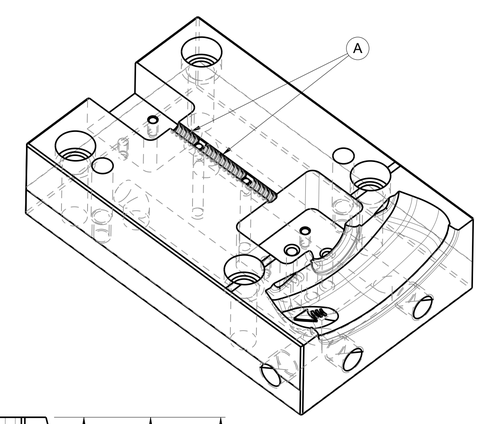

SCALE 1:1

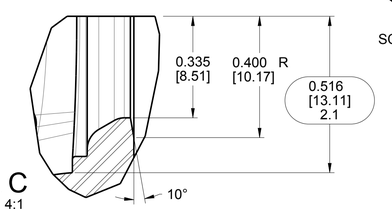

DETAIL C
SCALE 4:1

NOTE:

CAVITY MOLDING SURFACES
TO BE SPI-SPE# 2 FINISH
THREADS AREA TO BE DRAW POLISHED

REFER TO 3-D MODEL
FOR MOLDING SURFACES

DENOTES CRITICAL DIMENSIONS,
PERNAMENT Q.A. RECORD MUST BE KEPT

ALL WATERLINES ARE:
.344 [8.74] DIA
1/8-27 NPT (3)
PLUG AS SHOWN

DIMENSIONS IN BRACKETS [0.000]
ARE MILLIMETERS

FIRESTARTER

REV	ECN	DATE	REVISION RECORD	DRN	APPR
A	5009995	01-20-16	INCREASED LENGTH OF SHAFT UNDERCUTS FROM .060 TO .100. ADDED (2) SETS OF UNDERCUTS	DTB	CV

TOLERANCES
UNLESS NOTED
-DIMENSIONS IN MILLIMETERS-
0 PLACE DECIMAL +/- 0.3
1 PLACE DECIMAL +/- 0.25
2 PLACE DECIMAL +/- 0.025
3 PLACE DECIMAL +/- 0.013
-DIMENSION IN INCHES-
2 PLACE DECIMAL +/- 0.01
3 PLACE DECIMAL +/- 0.001
4 PLACE DECIMAL +/- 0.0005
ANGULAR +/- 0°15'

THE INFORMATION ON THIS DRAWING IS PROPRIETARY TO THE PLASTEK GROUP. THIS INFORMATION MAY NOT BE DISCLOSED OR REPRODUCED WITHOUT PRIOR WRITTEN CONSENT OF THE PLASTEK GROUP.

DO NOT SCALE DRAWING

APPROVALS

DESIGNER	-	DATE -
DRAWN	J.D.SOLIWODA	DATE 09/25/14
CHECKED	-	DATE -
APPROVED	C.VARKEY	DATE 09/25/14
REFERENCE NO.		
MATERIAL	420 S.S. STAVAX	
HARDNESS	48-50 Rc	QUANTITY REQ'D 24

THE PLASTEK GROUP
ERIE, PENNSYLVANIA

DESCRIPTION
CORE BLOCK
24 CAV GENGHIS REG SCREW (50785)

SCALE	ECN NUMBER	CUSTOMER NUMBER
2:1	5009188	44000008
SHRINK -		

SIZE D | DRAWING NO. 1977B_101 | REV. A