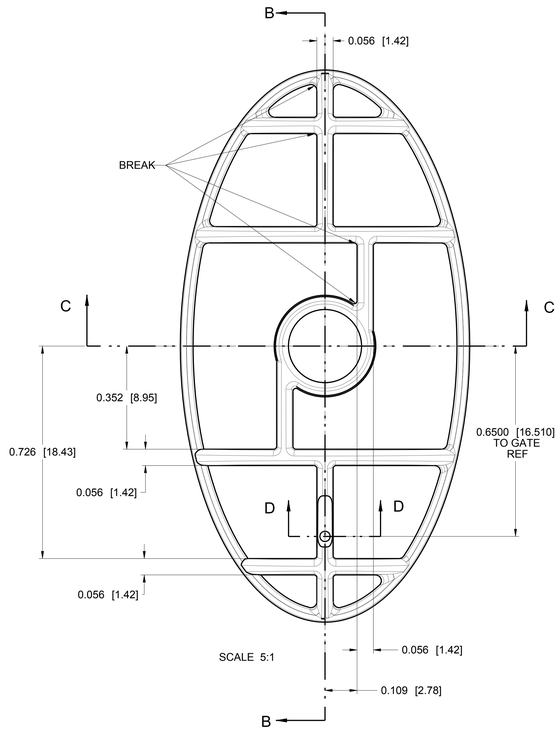

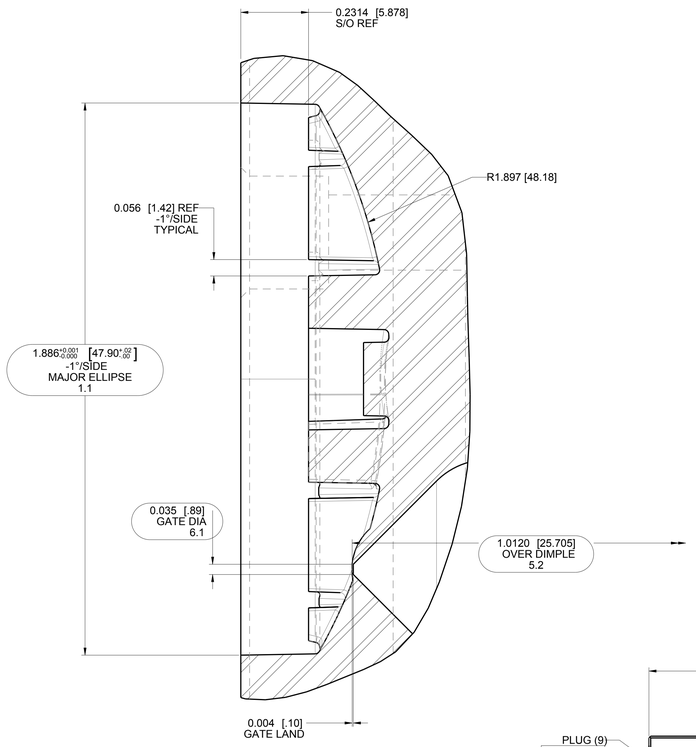

SECTION B-B

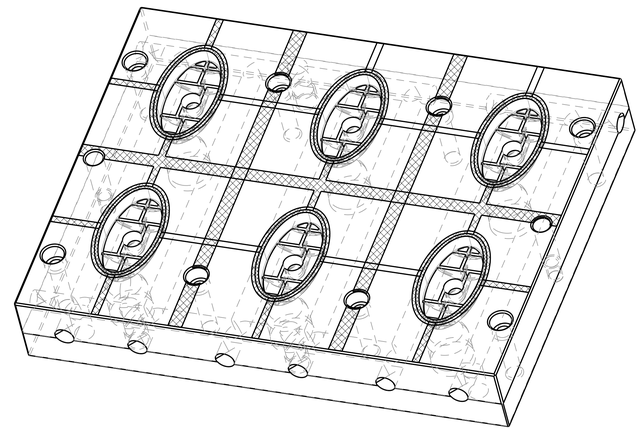

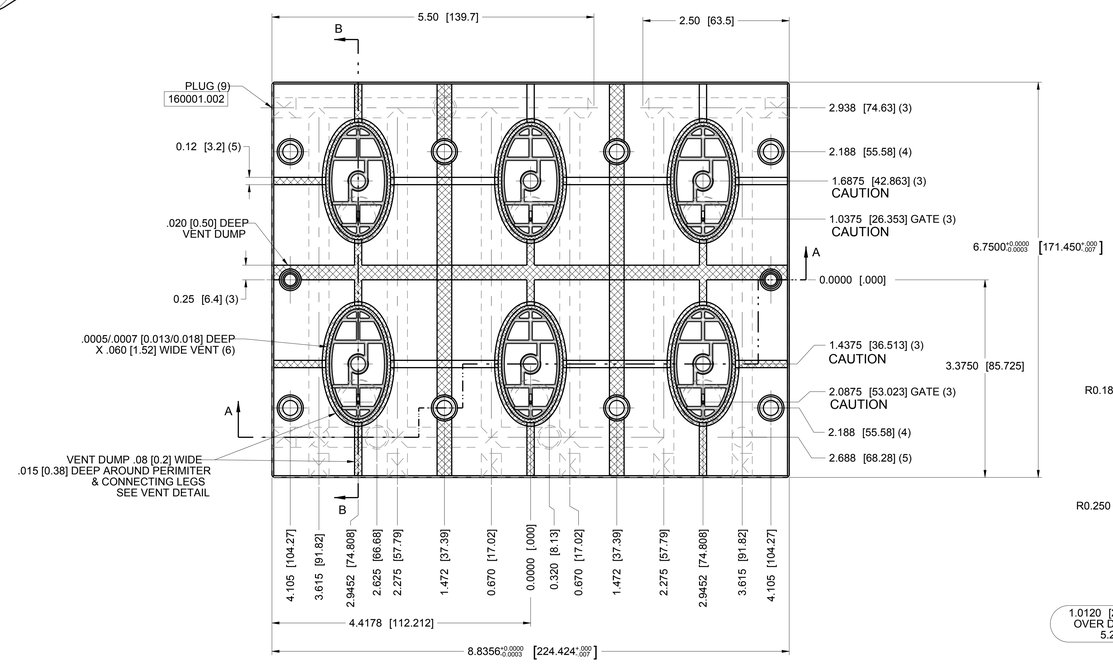

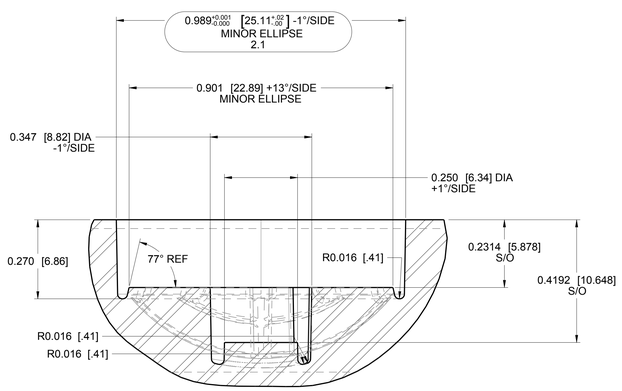

SECTION C-C

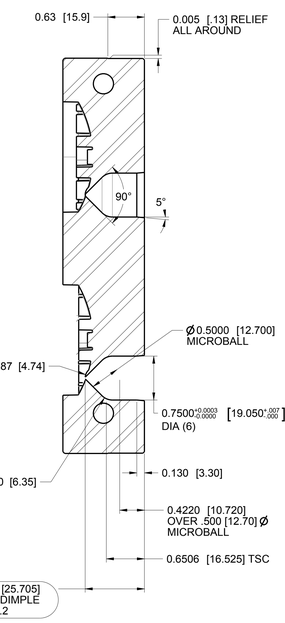

SECTION B-B

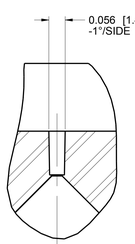

SECTION D-D

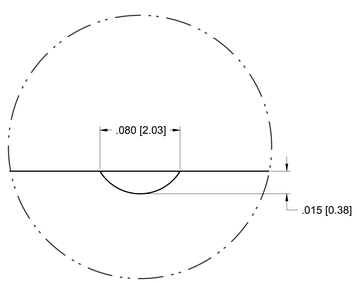

DETAIL OF VENT DUMP
NOT TO SCALE

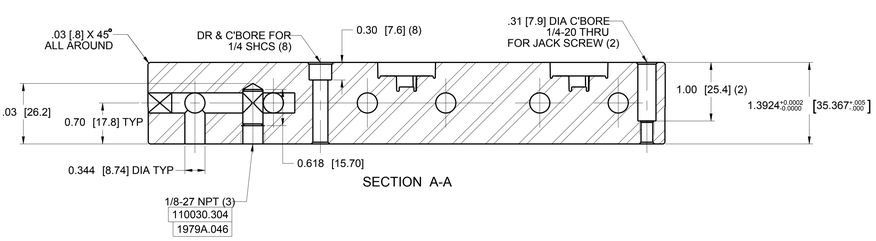

SECTION A-A

NOTE:
-MOLDING DIMENSIONS ARE FOR REFERENCE ONLY. SEE PRO-E MODEL
-MODEL IS A TRUE ELLIPSE
-DRAW POLISH MOLDING AREA
-DUAL DIMENSIONS IN BRACKETS [0.000] ARE MILLIMETERS

DENOTES CRITICAL DIMENSION
RECORDS MUST BE KEPT

REV.	ECN	DATE	REVISION RECORD	DRN	APPR
A	5003851	02/19/07	CONVERT TO DUAL DIMENSIONS	RB	CV

APPROVALS		
DRAWN	J.D.SOLIWODA	12/08/06
CHECKED	J.D.SOLIWODA	12/08/06
APPROVED	C. VARKEY	12/08/06

THE PLASTEK GROUP
ERIE, PENNSYLVANIA

DESCRIPTION: CAVITY BLOCK
48 CAVITY METEOR PLATFORM (50715)

REFERENCE NO.: 1866A_100 REV B
FINISH: -
MATERIAL: 420 SS (STAVAX)
HARDNESS: 48-52 Rc
QUANTITY REQUIRED: 8
SCALE: 1:1
SHRINKAGE: -
ECN NUMBER: 5003695
CUSTOMER NUMBER: 44000008
SIZE: E
DRAWING NO.: 1979A_100
REV.: