.28 [7.1] DIA. DR. THRU
& C'SINK FOR 1/4 FHCS
(2) PL'S.

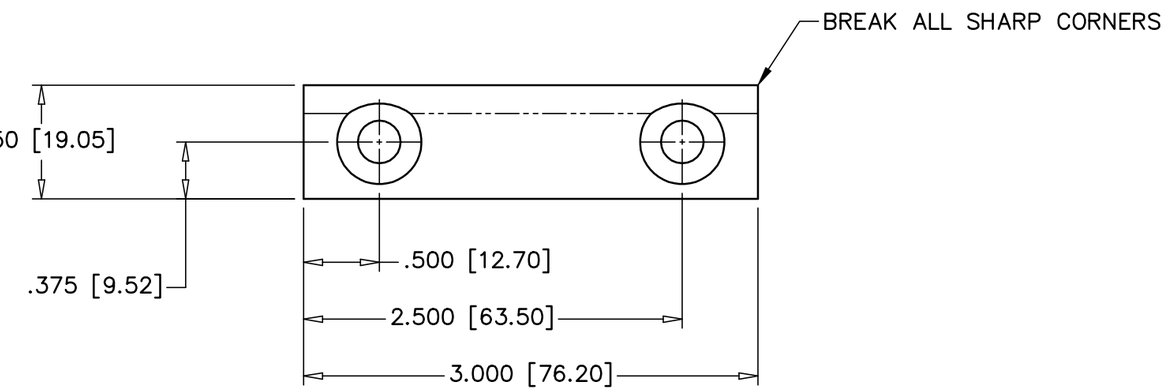


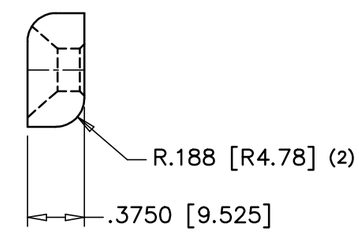


**NOTE:**

1.) BRACKETED DIMENSIONS ARE IN MM

**FIRESTARTER**

| REV. | ECN | DATE | REVISION RECORD | DRN | APPR |
|---|---|---|---|---|---|

TOLERANCES UNLESS NOTED

DIMENSIONS IN INCHES
2 PLACE DECIMAL +/- .01
3 PLACE DECIMAL +/- .001
4 PLACE DECIMAL +/- .0005

DIMENSIONS IN MILLIMETERS
0 PLACE DECIMAL +/- 0.3
1 PLACE DECIMAL +/- 0.25
2 PLACE DECIMAL +/- 0.025
3 PLACE DECIMAL +/- 0.013
ANGULAR: +/- 0° 15'

THE INFORMATION ON THIS DRAWING IS PROPRIETARY TO THE PLASTEK GROUP. THIS INFORMATION SHALL NOT BE DISCLOSED OR REPRODUCED WITHOUT PRIOR WRITTEN CONSENT OF THE PLASTEK GROUP.

DO NOT SCALE DRAWING

| APPROVALS | |
|---|---|
| DRN. G. Losasso | DATE 10/01/14 |
| CHK'D | DATE |
| APPROVED | DATE |
| APPROVED | DATE |
| REFERENCE | |
| MATERIAL LAMINA | |
| HDN / FINISH | QTY REQ'D 4 REQ'D |

THE PLASTEK GROUP
ERIE, PENNSYLVANIA

DESCRIPTION
**OUTER WEAR PLATE (CAV CENTER)**
24 CAV FIRESTARTER REG SCREW (50785)

| SCALE | ECN NUMBER | CUSTOMER |
|---|---|---|
| FULL | 5009188 | 44000008 |

| SIZE | DRAWING NO. | REV. |
|---|---|---|
| B | 1977B.016 | |