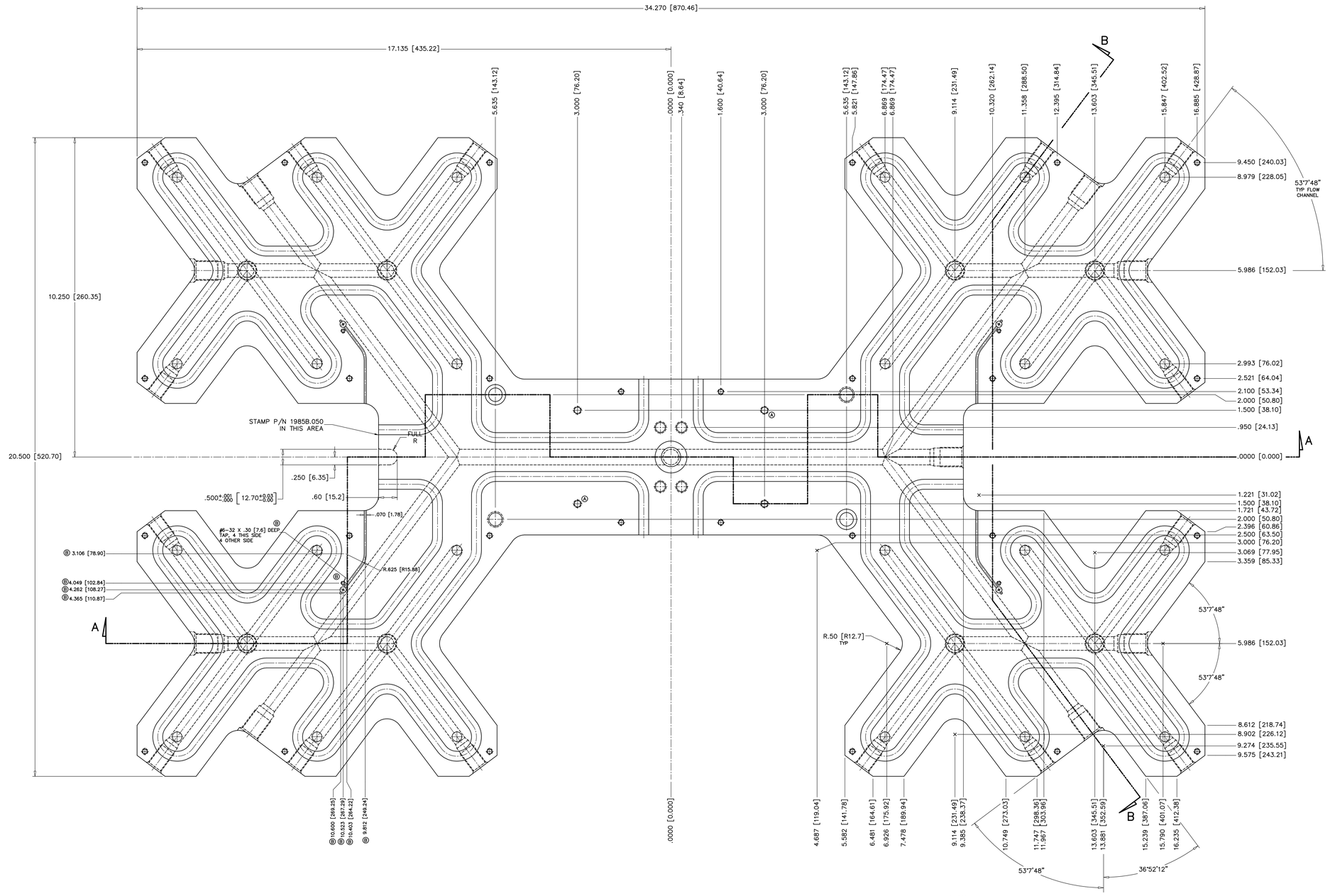

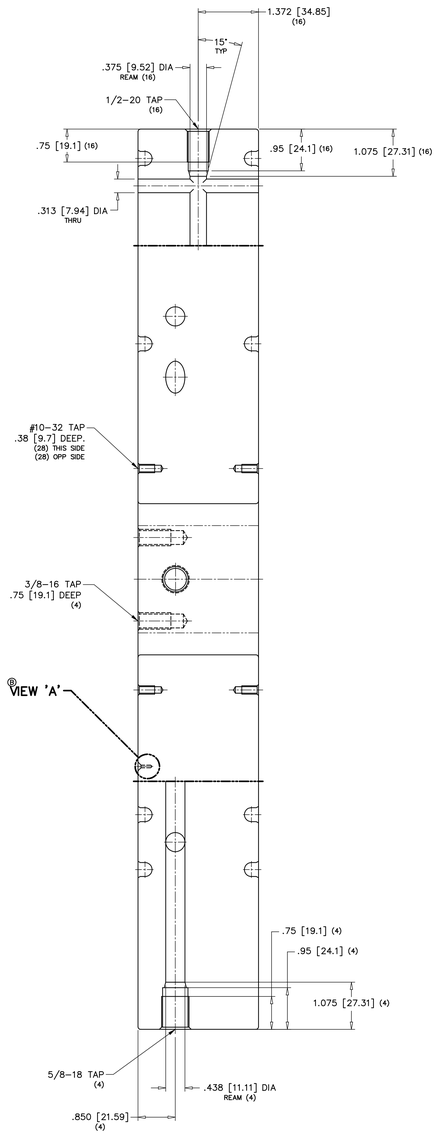

SECTION B–B

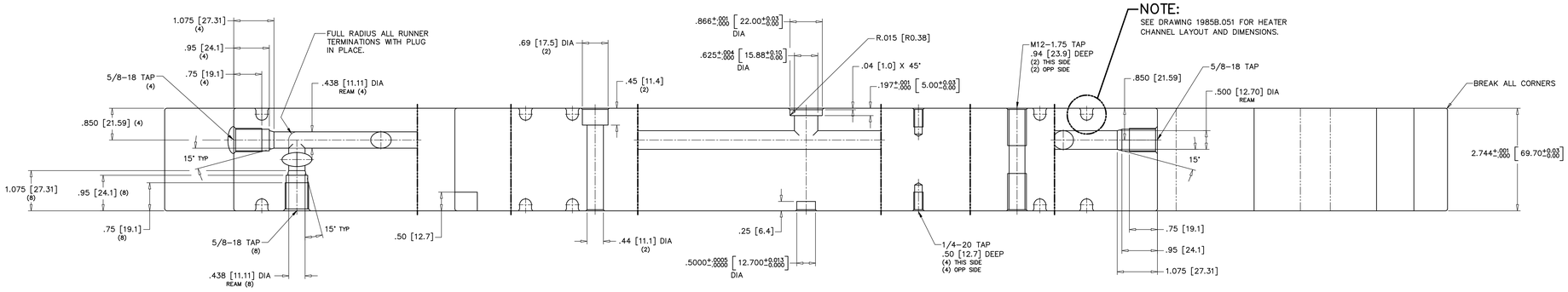

NOTE:
SEE DRAWING 1985B.051 FOR HEATER CHANNEL LAYOUT AND DIMENSIONS.

SECTION A–A

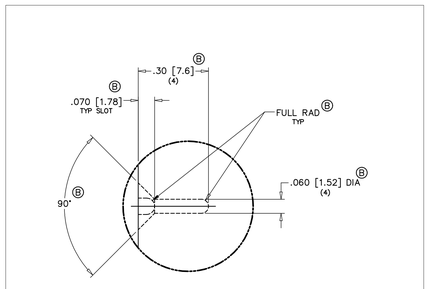

VIEW 'A'
THERMOCOUPLE SLOT
SCALE: 4X SIZE

NOTE:

1.) BRACKETED DIMENSIONS ARE IN MM

METEOR

REV.	ECN	DATE	REVISION RECORD	DRN	APPR
B	5009783	02/03/16	ADDED T/C SLOTS	SWS	SWS
A	5009783	10/25/15	REVISED HEATER CHANNEL, ADDED 2 TAPS PER SIDE	SWS	SWS

TOLERANCES UNLESS NOTED
DIMENSIONS IN INCHES:
2 PLACE DECIMAL +/- .01
3 PLACE DECIMAL +/- .001
4 PLACE DECIMAL +/- .0005
DIMENSIONS IN MILLIMETERS
0 PLACE DECIMAL +/- 0.3
1 PLACE DECIMAL +/- 0.25
2 PLACE DECIMAL +/- 0.025
3 PLACE DECIMAL +/- 0.013
ANGULAR: +/- 0° 15'

THE INFORMATION ON THIS DRAWING IS PROPRIETARY TO THE PLASTEK GROUP. IT MAY NOT BE DISCLOSED OR SHALL NOT BE DISCLOSED OR REPRODUCED WITHOUT PRIOR WRITTEN CONSENT OF THE PLASTEK GROUP.

DO NOT SCALE DRAWING

APPROVALS

DRN.	G. Logasso	DATE 11/03/14
CHK'D		DATE
APPROVED		DATE
APPROVED		DATE

REFERENCE

MATERIAL: 420SS

HDN / FINISH: PRE-HARD

QTY REQ'D: (1) REQ'D

THE PLASTEK GROUP
ERIE, PENNSYLVANIA

DESCRIPTION: **MANIFOLD**
(2X24) CAV METEOR BARREL (50701)

SCALE	ECN NUMBER	CUSTOMER
.75 : 1	5009196	44000008

SIZE	DRAWING NO.	REV.
E	1985B.050	B