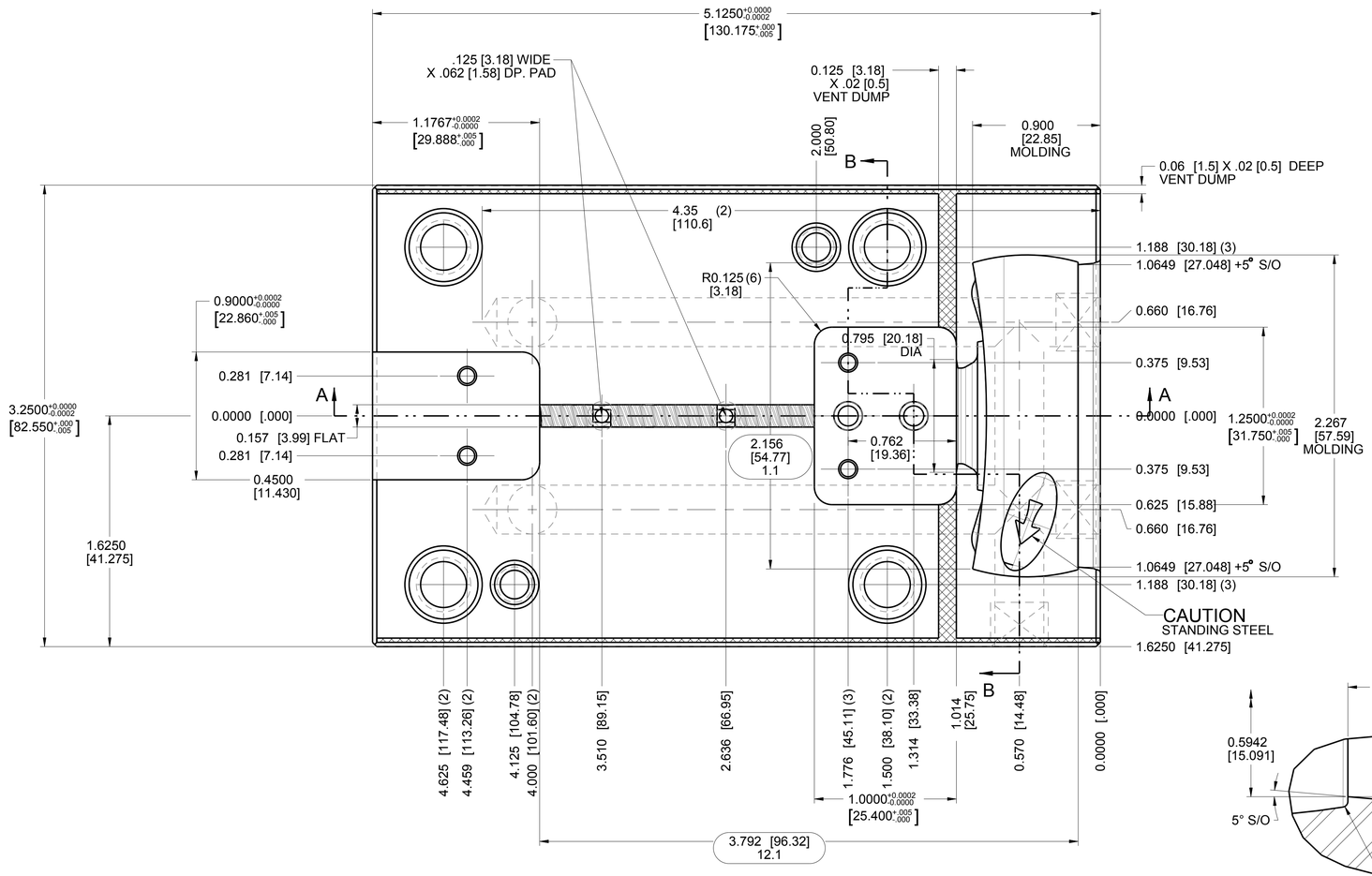

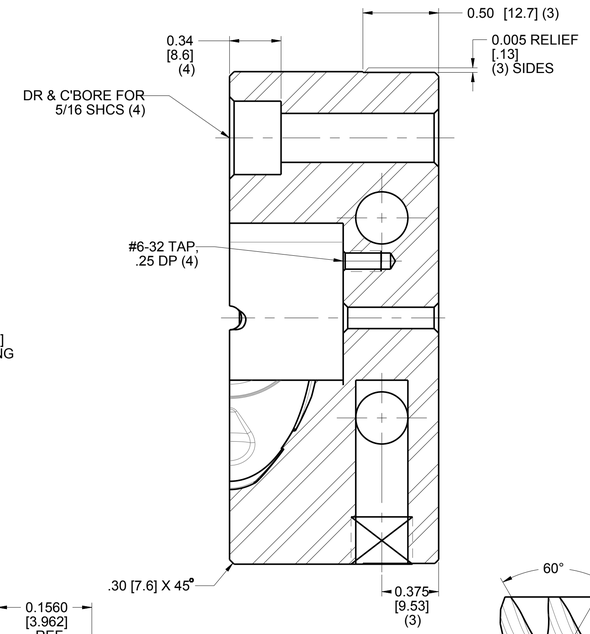

SECTION B-B

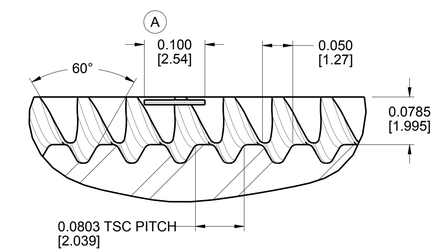

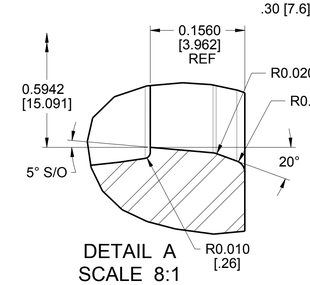

DETAIL A
SCALE 8:1

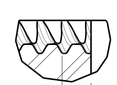

DETAIL B
SCALE 4:1

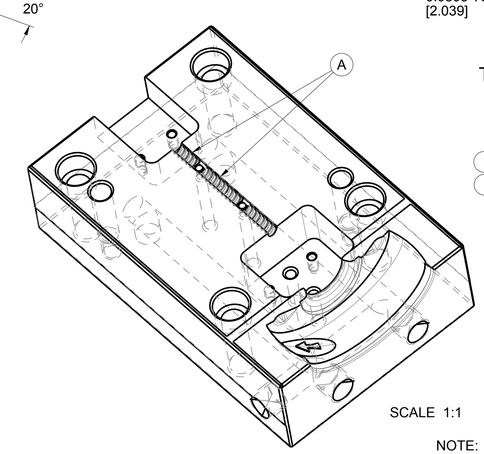

SCALE 1:1

THREAD DATA
SCALE 8:1

DOUBLE LEAD
LEFT HAND THREAD

"T" = .218 [5.54] DIA	3.1
"E" = .157 [3.99] DIA	4.1

LEAD = .1604 [4.074]
PITCH = .0803 [2.040]

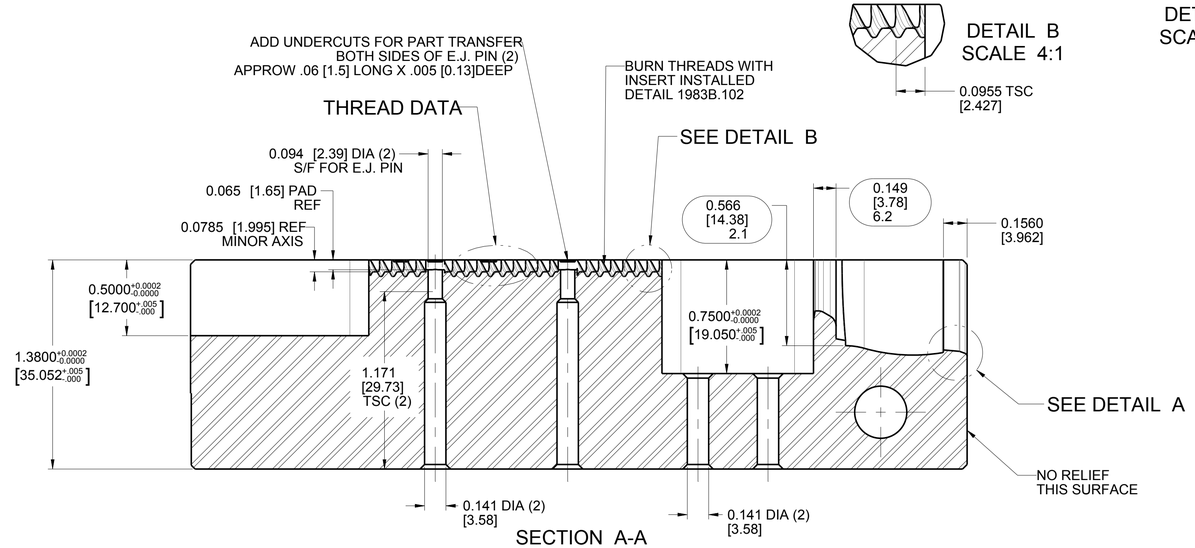

SECTION A-A

ALL WATERLINES ARE:
.344 [8.74] DIA
1/8-27 NPT (3)
PLUG WHERE SHOWN

NOTE:
DIMENSIONS IN BRACKETS [0.000]
ARE MILLIMETERS

METEOR

REV	ECN	DATE	REVISION RECORD	DRN	APPR
A	5009996	01-21-16	INCREASED SHAFT UNDERCUT FROM .060 TO .100. ADDED (2) UNDERCUTS	DTB	CV

TOLERANCES
UNLESS NOTED
-DIMENSIONS IN MILLIMETERS-
0 PLACE DECIMAL +/- 0.3
1 PLACE DECIMAL +/- 0.25
2 PLACE DECIMAL +/- 0.025
3 PLACE DECIMAL +/- 0.013
-DIMENSION IN INCHES-
2 PLACE DECIMAL +/- 0.01
3 PLACE DECIMAL +/- 0.001
4 PLACE DECIMAL +/- 0.0005
ANGULAR +/- 0°15'

THE INFORMATION ON THIS DRAWING IS PROPRIETARY TO THE PLASTEK GROUP. THIS INFORMATION SHALL NOT BE DISCLOSED OR REPRODUCED WITHOUT PRIOR WRITTEN CONSENT OF THE PLASTEK GROUP.

DO NOT SCALE DRAWING

APPROVALS

DESIGNER	-	DATE -
DRAWN	J.D.SOLIWODA	DATE 09/26/14
CHECKED	-	DATE -
APPROVED	C. VARKEY	DATE 09/26/14

REFERENCE NO.
MATERIAL: 420 S.S. (STAVAX)
HARDNESS: 48-50 Rc
QUANTITY REQ'D: 48

THE PLASTEK GROUP
ERIE, PENNSYLVANIA

DESCRIPTION
B/H CORE BLOCK
2x24 CAV GENGHIS REG SCREW (50786)

SCALE 2:1
SHRINK -
ECN NUMBER 5009194
CUSTOMER NUMBER 44000008
SIZE D
DRAWING NO. 1983B_101
REV. A