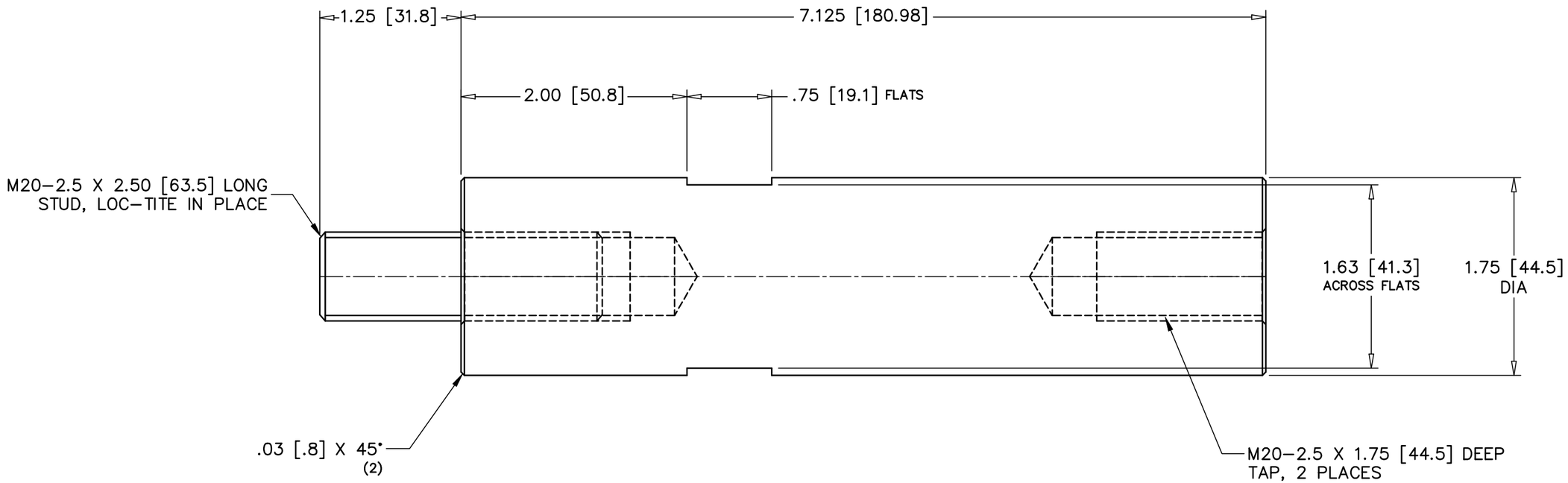

NOTE:

1.) BRACKETED DIMENSION ARE IN MM

METEOR

REV.	ECN	DATE	REVISION RECORD	DRN	APPR
A	5003851	03/15/07	ADDED DUAL DIMENSIONS	BFR	CV

TOLERANCES UNLESS NOTED

DIMENSIONS IN INCHES
2 PLACE DECIMAL +/– .01
3 PLACE DECIMAL +/– .001
4 PLACE DECIMAL +/– .0005

DIMENSIONS IN MILLIMETERS
0 PLACE DECIMAL +/– 0.3
1 PLACE DECIMAL +/– 0.25
2 PLACE DECIMAL +/– 0.025
3 PLACE DECIMAL +/– 0.013
ANGULAR: +/– 0° 15'

THE INFORMATION ON THIS DRAWING IS PROPRIETARY TO THE PLASTEK GROUP. THIS INFORMATION SHALL NOT BE DISCLOSED OR REPRODUCED WITHOUT PRIOR WRITTEN CONSENT OF THE PLASTEK GROUP.

DO NOT SCALE DRAWING

APPROVALS

DRN.	J.D.SOLIWODA	DATE	01/13/07
CHK'D	J.D.SOLIWODA	DATE	01/13/07
APPROVED	C. VARKEY	DATE	01/13/07
APPROVED		DATE	

REFERENCE

MATERIAL
C.R.S.

HDN / FINISH

QTY REQ'D
2

THE PLASTEK GROUP
ERIE, PENNSYLVANIA

DESCRIPTION
LIFT ROD
48 CAV "GENGHIS" PLATFORM MOLD (50715)

SCALE	ECN NUMBER	CUSTOMER
FULL SIZE	5003695	44000008

SIZE	DRAWING NO.	REV.
B	1979A.033	A