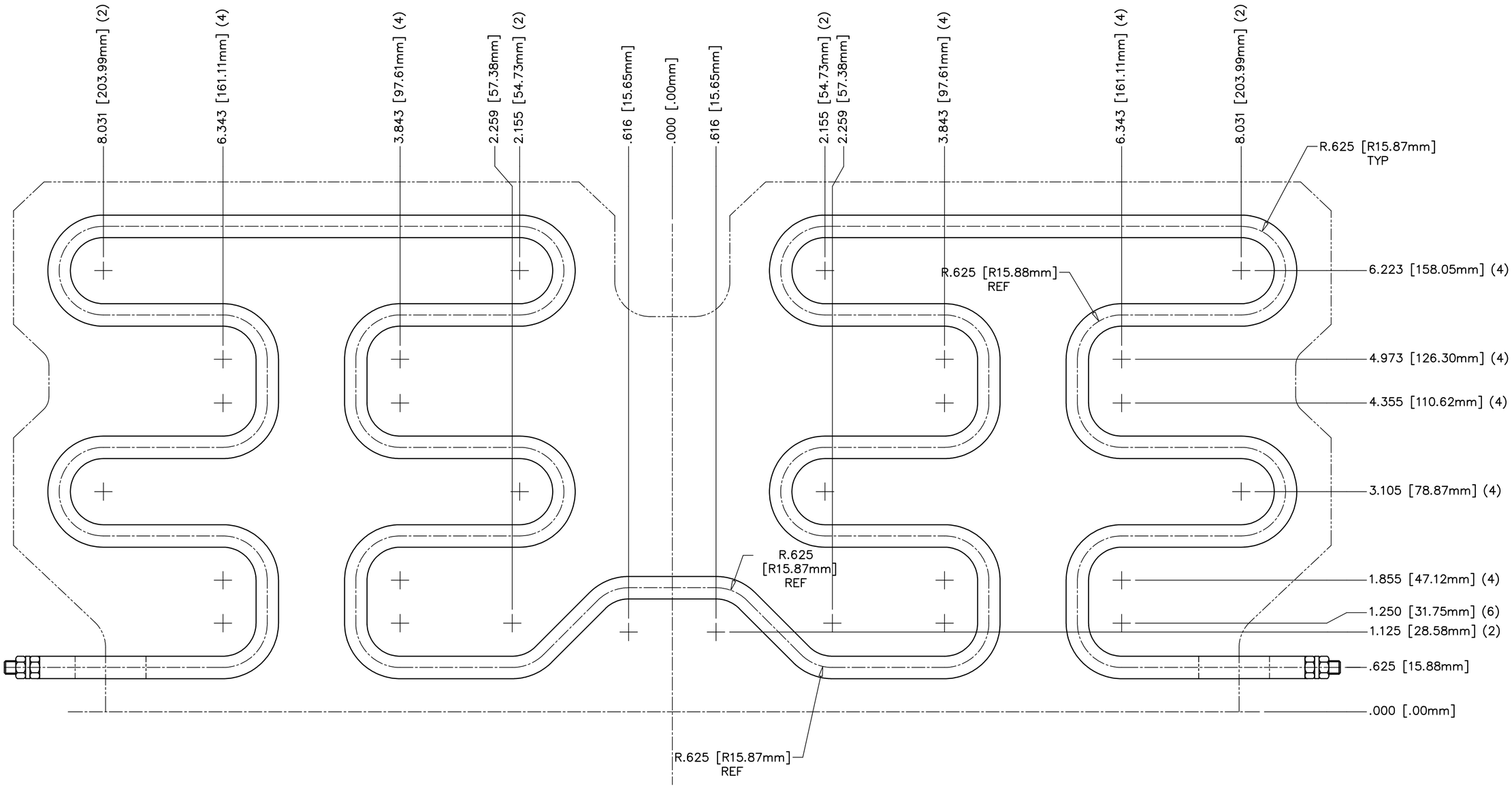

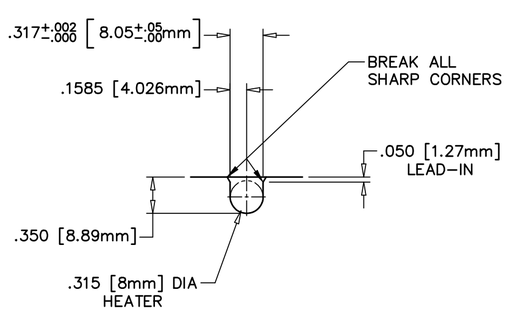

HEATER CHANNEL

NOTE:
FORMED TUBULAR HEATER
83.00 INCH OVERALL LENGTH
81.00 INCH SHEATH LENGTH
79.00 INCH HEATED LENGTH
.315 [8.00mm] O.D. HEATER
3600 WATTS, 240 VOLTS
#10-32 STUD TERMINALS
FORMED TO ABOVE SPECIFICATIONS.

FIRESTARTER

REV.	ECN	DATE	REVISION RECORD	DRN	APPR

TOLERANCES UNLESS NOTED
2 PLACE DECIMAL +/- .01
3 PLACE DECIMAL +/- .001
4 PLACE DECIMAL +/- .0005
ANGULAR: +/- 0° 15'
DIMENSIONS IN INCHES

THE INFORMATION ON THIS DRAWING IS PROPRIETARY TO THE PLASTEK GROUP. THIS INFORMATION SHALL NOT BE DISCLOSED OR REPRODUCED WITHOUT PRIOR WRITTEN CONSENT OF THE PLASTEK GROUP.

DO NOT SCALE DRAWING

APPROVALS	
DRN. J. SOLIWODA	DATE 08/15/15
CHK'D D. ROHAN	DATE 08/19/15
APPROVED C. VARKEY	DATE 08/06/15
APPROVED	DATE

REFERENCE
MATERIAL SEE ABOVE
HDN / FINISH –
QTY REQ'D 4 REQ'D

THE PLASTEK GROUP
ERIE, PENNSYLVANIA

DESCRIPTION
FORMED TUBULAR HEATER
24 CAV "GENGHIS" PLATFORM (50550)

SCALE	ECN NUMBER	CUSTOMER
N.T.S.	5009698	–

SIZE	DRAWING NO.	REV.
C	2403A.025	