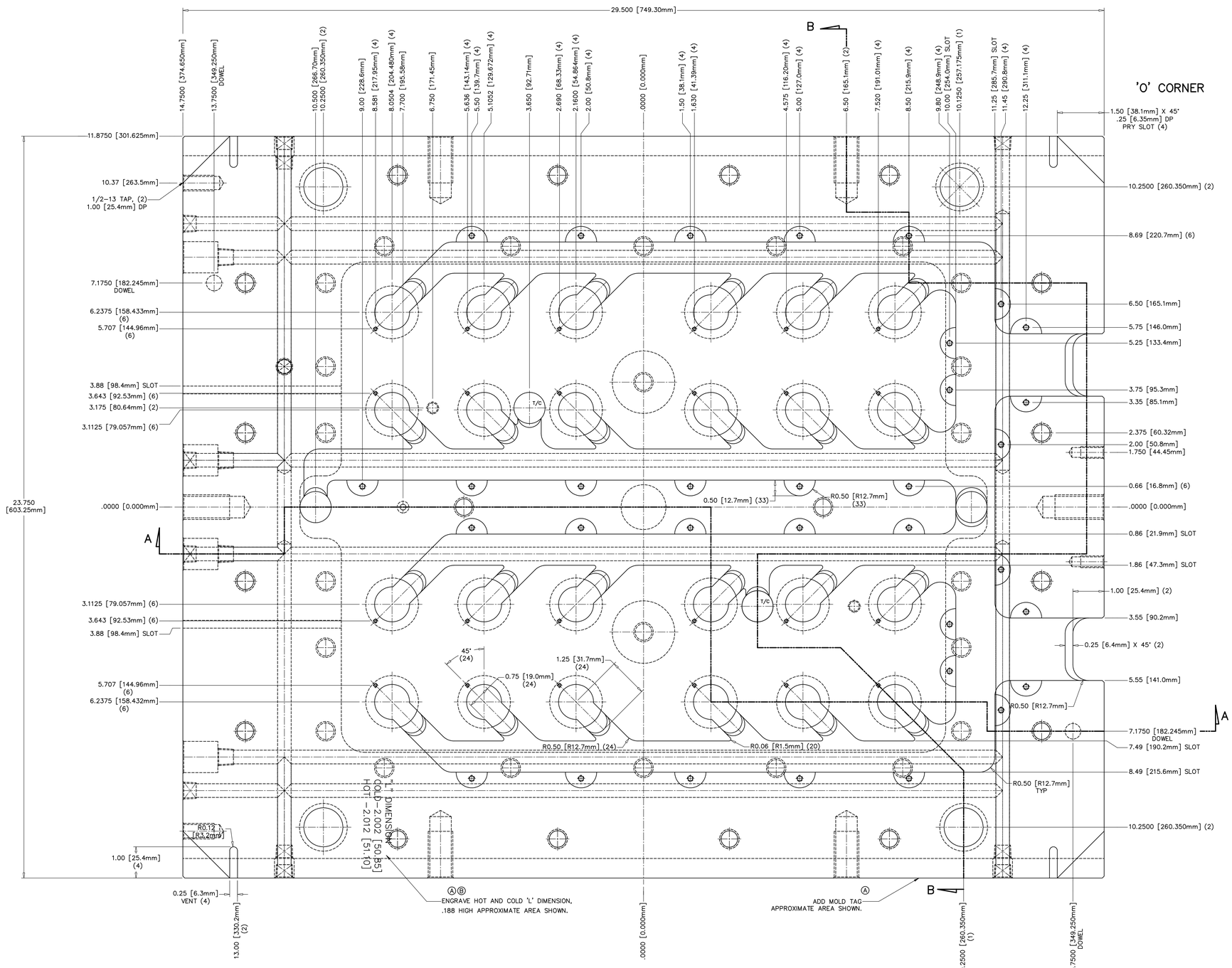

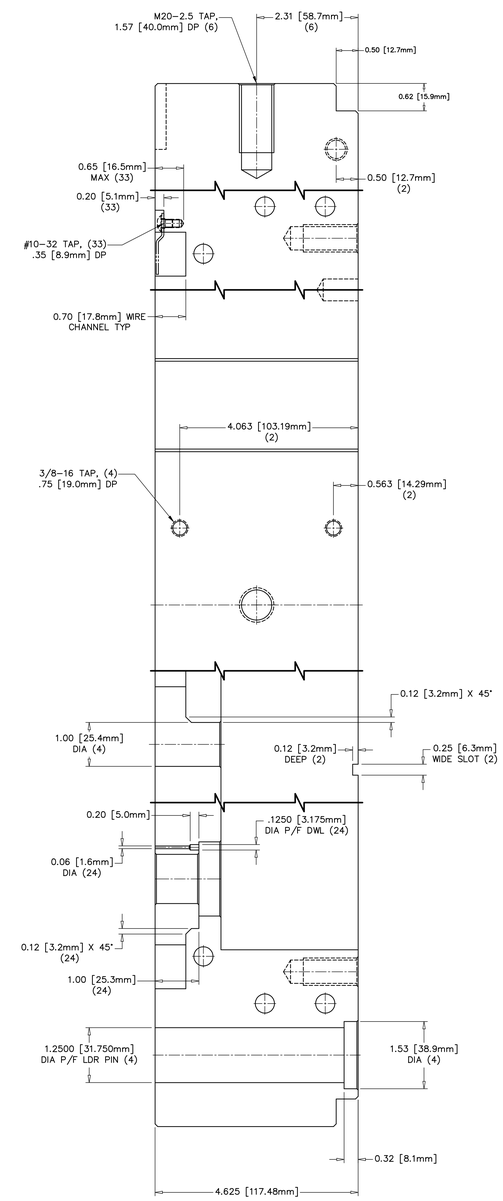

SECTION B–B

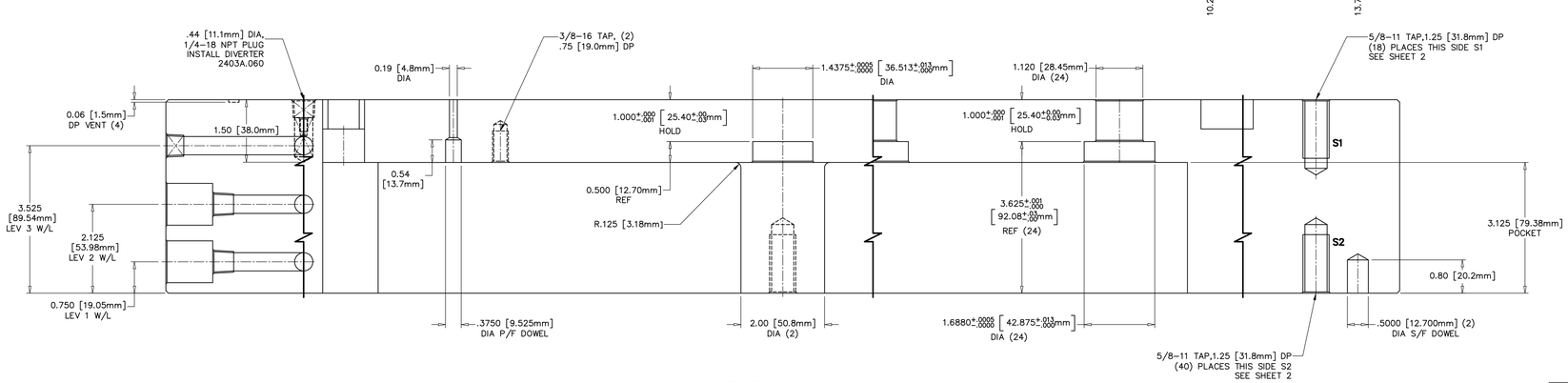

SECTION A–A

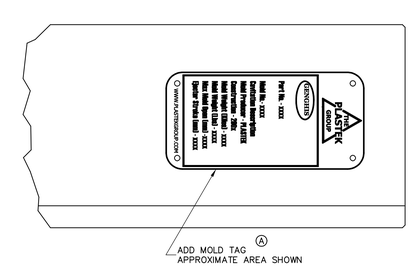

FIRESTARTER

REV.	ECN	DATE	REVISION RECORD	DRN	APPR
B	5009796	10/28/15	MOVED HOT/COLD 'L' DIM ENGRAVING TO PLATE FACE.	JDS	CV
A	5009796	10/14/15	ADDED NOTE TO STAMP HOT AND COLD 'L' DIMENSION.	JDS	CV

TOLERANCES UNLESS NOTED
DIMENSIONS IN INCHES
2 PLACE DECIMAL +/- .01
3 PLACE DECIMAL +/- .001
4 PLACE DECIMAL +/- .0005
DIMENSIONS IN MILLIMETERS
0 PLACE DECIMAL +/- 0.3
1 PLACE DECIMAL +/- 0.25
2 PLACE DECIMAL +/- 0.025
3 PLACE DECIMAL +/- 0.013
ANGULAR: +/- 0° 15'

THE INFORMATION ON THIS DRAWING IS PROPRIETARY TO THE PLASTEK GROUP. THIS INFORMATION SHALL NOT BE DISCLOSED OR REPRODUCED WITHOUT WRITTEN CONSENT OF THE PLASTEK GROUP.

DO NOT SCALE DRAWING

APPROVALS		
DRN.	J. SOLWODA	DATE 08/14/15
DWG.	D. ROHAN	DATE 08/19/15
APPROVED	C. VARKEY	DATE 08/06/15
APPROVED		DATE
REFERENCE		
MATERIAL	420SS ROYALLOY	
HDN / FINISH	PRE-HARD	QTY REQ'D 1 REQ'D

THE PLASTEK GROUP
ERIE, PENNSYLVANIA

DESCRIPTION
MANIFOLD PLATE
24 CAV "GENGHIS" PLATFORM (50550)

SCALE	ECN NUMBER	CUSTOMER
.75 = 1.00	5009698	–

SIZE	DRAWING NO.	REV.
E	2403A.002	B

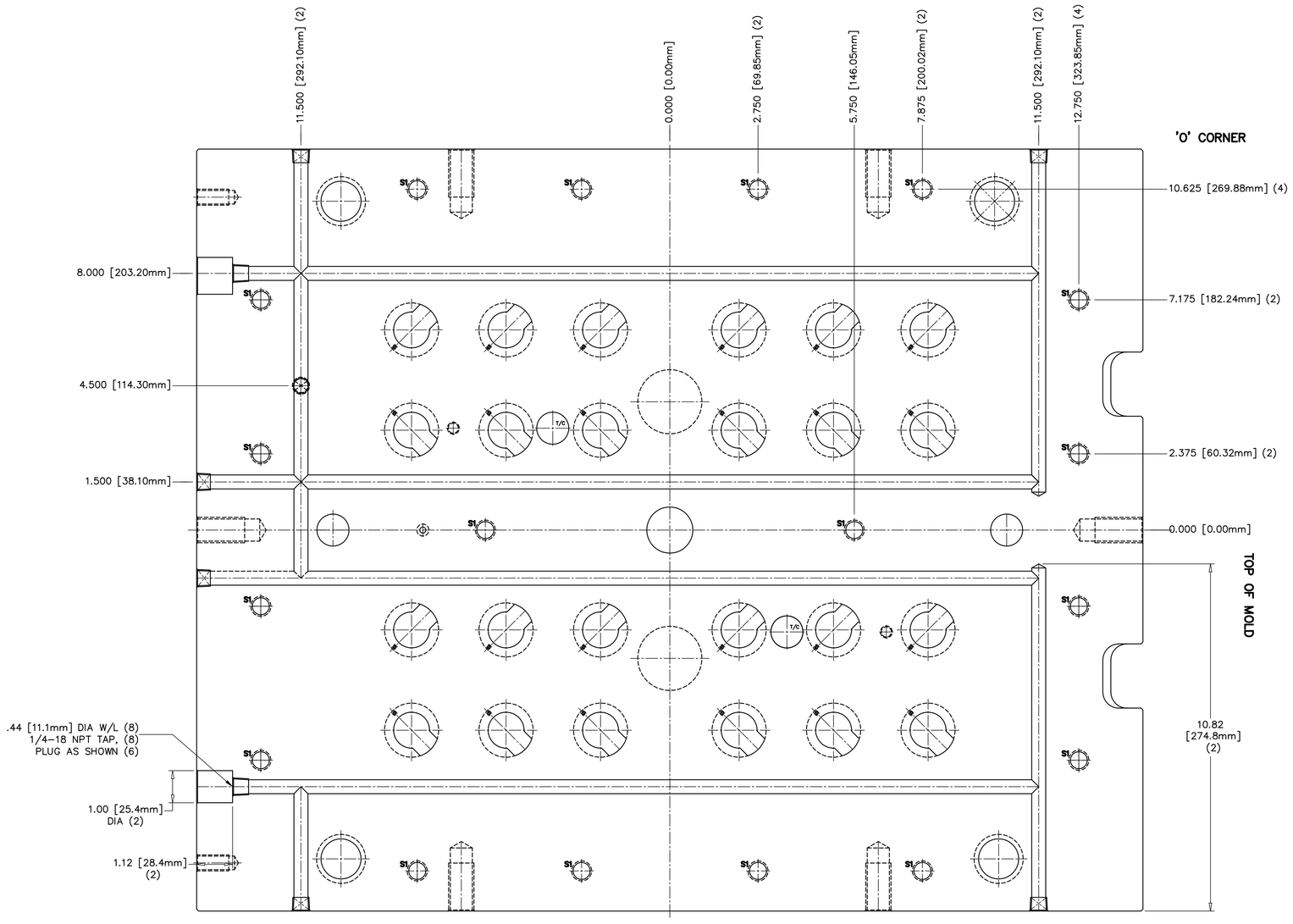

LEVEL 3 WATERLINE
S1 TAP LOCATIONS
1/2 SCALE

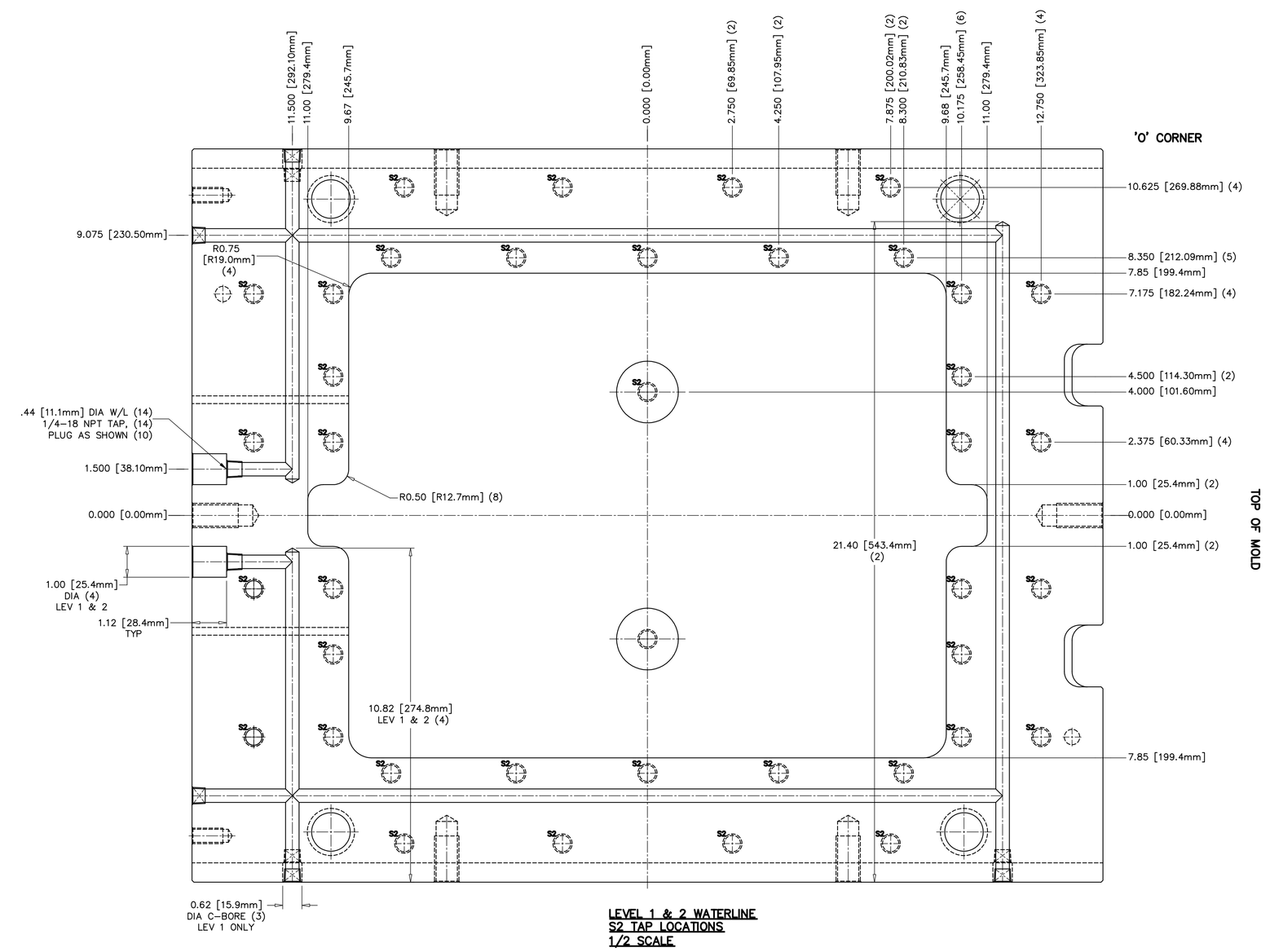

LEVEL 1 & 2 WATERLINE
S2 TAP LOCATIONS
1/2 SCALE

PAGE 2 OF 2 FIRESTARTER

REV.	ECN	DATE	REVISION RECORD	DRN	APPR
B	5009796	10/28/15	MOVED HOT/COLD 'L' DIM ENGRAVING TO PLATE FACE.	JDS	CV
A	5009698	10/14/15	ADDED NOTE TO STAMP HOT AND COLD 'L' DIMENSION.	JDS	CV

DO NOT SCALE DRAWING

TOLERANCES UNLESS NOTED
DIMENSIONS IN INCHES:
2 PLACE DECIMAL +/- .01
3 PLACE DECIMAL +/- .001
4 PLACE DECIMAL +/- .0005
DIMENSIONS IN MILLIMETERS
0 PLACE DECIMAL +/- 0.3
1 PLACE DECIMAL +/- 0.25
2 PLACE DECIMAL +/- 0.025
3 PLACE DECIMAL +/- 0.013
ANGULAR: +/- 0° 15'

THE INFORMATION ON THIS DRAWING IS PROPRIETARY TO THE PLASTEK GROUP. IT IS UNPUBLISHED AND SHALL NOT BE DISCLOSED OR REPRODUCED WITHOUT PRIOR WRITTEN CONSENT OF THE PLASTEK GROUP.

APPROVALS
DRN. J. SOLIWODA DATE 08/14/15
CHK'D. D. ROHAN DATE 08/19/15
APPROVED: C. VARKEY DATE 08/06/15
APPROVED: DATE

REFERENCE
MATERIAL: 420SS ROYALLOY
HDN / FINISH: PRE-HARD
QTY REQ'D: 1 REQ'D

THE PLASTEK GROUP
ERIE, PENNSYLVANIA

DESCRIPTION: MANIFOLD PLATE
24 CAV "GENGHIS" PLATFORM (50550)

SCALE: NOTED
ECN NUMBER: 5009698
CUSTOMER: –
SIZE: E
DRAWING NO.: 2403A.002
REV.: B