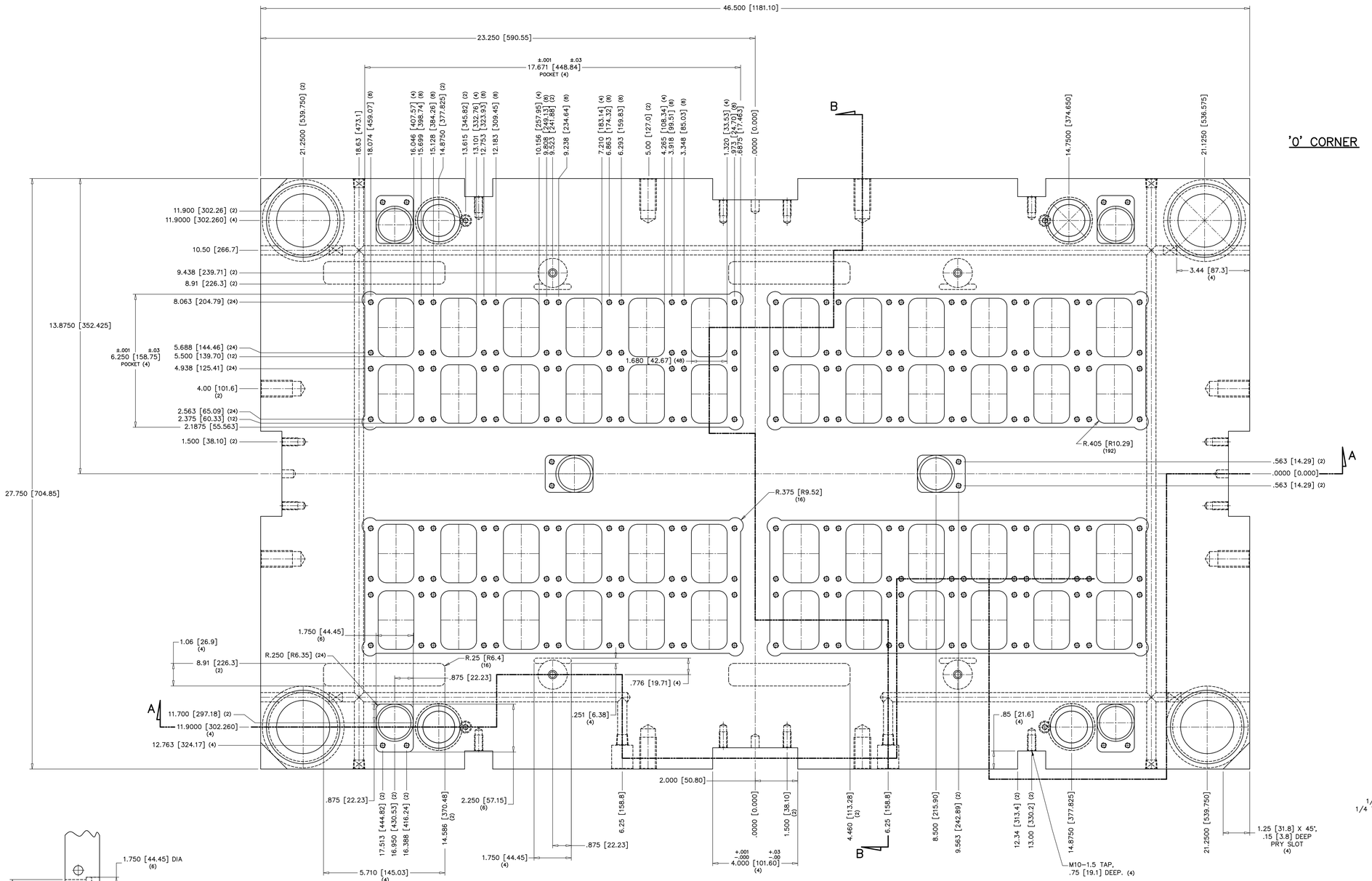

'O' CORNER

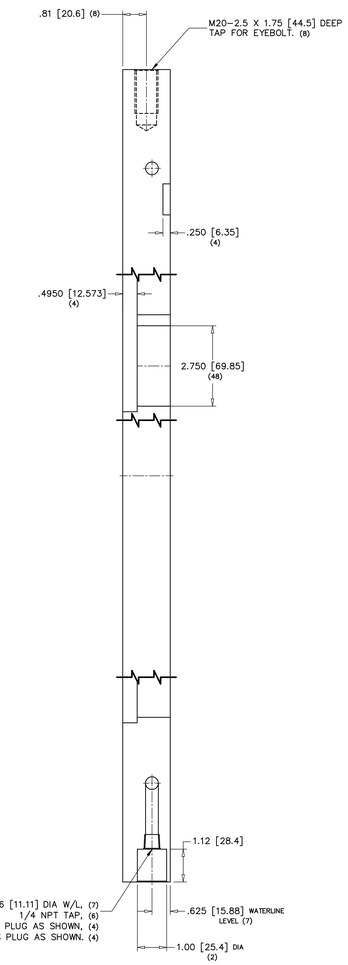

SECTION B–B

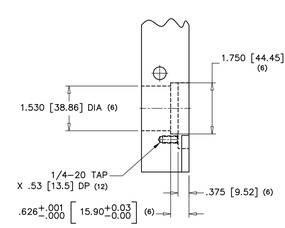

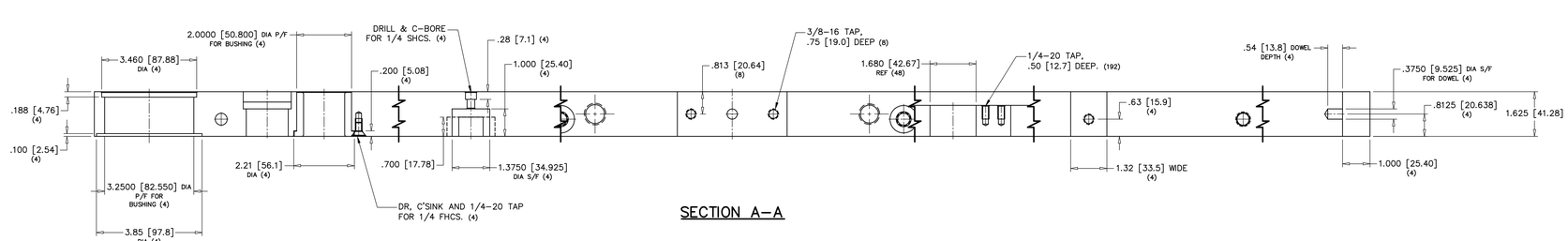

SECTION A–A

NOTE:

1) BRACKETED DIMENSIONS ARE IN MM.

METEOR

REV.	ECN	DATE	REVISION RECORD	DRN	APPR

DO NOT SCALE DRAWING

TOLERANCES UNLESS NOTED
2 PLACE DECIMAL +/- .01
3 PLACE DECIMAL +/- .001
4 PLACE DECIMAL +/- .0005
ANGULAR: +/- 0° 15'
DIMENSIONS IN INCHES

THE INFORMATION ON THIS DRAWING IS PROPRIETARY TO THE PLASTEK GROUP. THIS INFORMATION SHALL NOT BE DISCLOSED OR REPRODUCED WITHOUT PRIOR WRITTEN CONSENT OF THE PLASTEK GROUP.

APPROVALS		
DRN. G. Lossasso	DATE 09/17/14	
CHK'D	DATE	
APPROVED	DATE	
APPROVED	DATE	

REFERENCE

MATERIAL 420SS

HDN / FINISH PREHARD | QTY REQ'D 1

THE PLASTEK GROUP
ERIE, PENNSYLVANIA

DESCRIPTION
STRIPPER PLATE
48 CAV METEOR PLATFORM MOLD (50715)

SCALE	ECN NUMBER	CUSTOMER
.50 = 1.00	5009190	44000008

SIZE	DRAWING NO.	REV.
E	1979B.004	