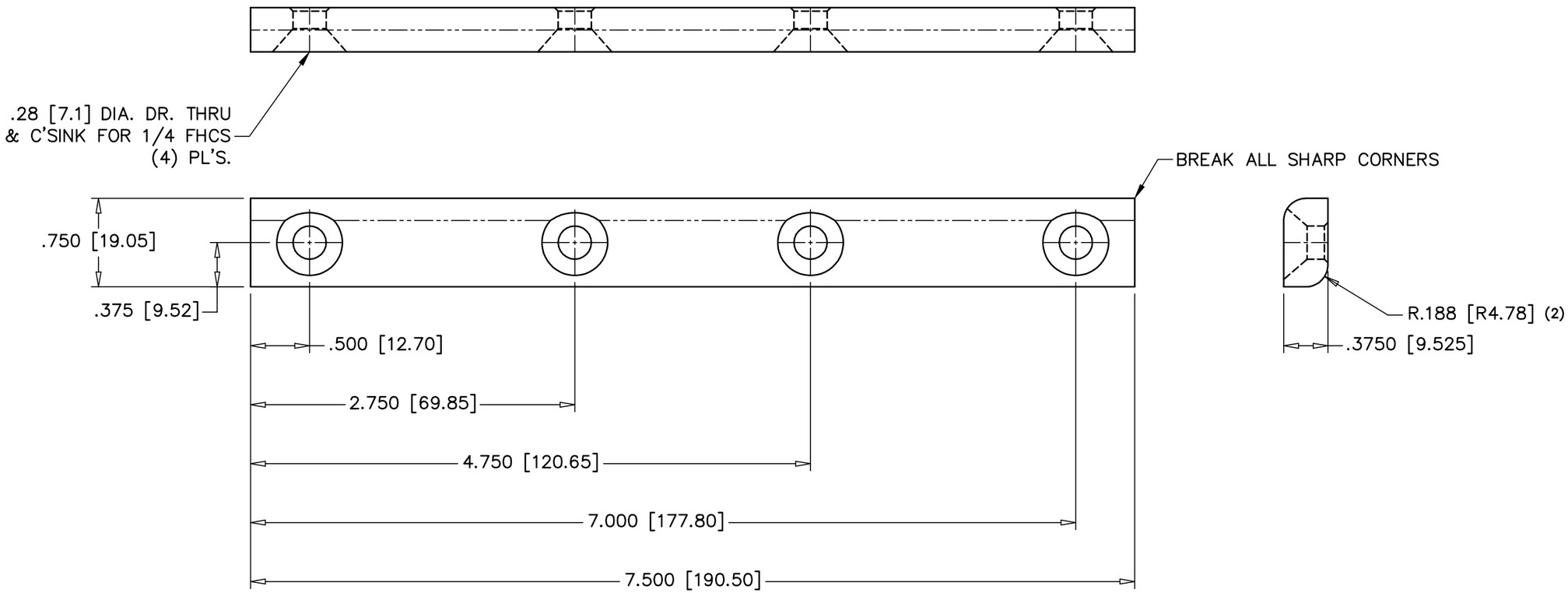

NOTE:

1.) BRACKETED DIMENSIONS ARE IN MM

FIRESTARTER

REV.	ECN	DATE	REVISION RECORD	DRN	APPR

TOLERANCES UNLESS NOTED

DIMENSIONS IN INCHES
2 PLACE DECIMAL +/- .01
3 PLACE DECIMAL +/- .001
4 PLACE DECIMAL +/- .0005

DIMENSIONS IN MILLIMETERS
0 PLACE DECIMAL +/- 0.3
1 PLACE DECIMAL +/- 0.25
2 PLACE DECIMAL +/- 0.025
3 PLACE DECIMAL +/- 0.013
ANGULAR: +/- 0° 15'

THE INFORMATION ON THIS DRAWING IS PROPRIETARY TO THE PLASTEK GROUP. THIS INFORMATION SHALL NOT BE DISCLOSED OR REPRODUCED WITHOUT PRIOR WRITTEN CONSENT OF THE PLASTEK GROUP.

DO NOT SCALE DRAWING

APPROVALS	
DRN. G. Losasso	DATE 10/01/14
CHK'D	DATE
APPROVED	DATE
APPROVED	DATE
REFERENCE	
MATERIAL LAMINA	
HDN / FINISH	QTY REQ'D 4 REQ'D

THE PLASTEK GROUP
ERIE, PENNSYLVANIA

DESCRIPTION
OUTER WEAR PLATE (CAV ENDS)
24 CAV FIRESTARTER REG SCREW (50785)

SCALE	ECN NUMBER	CUSTOMER
FULL	5009188	44000008

SIZE	DRAWING NO.	REV.
B	1977B.015	