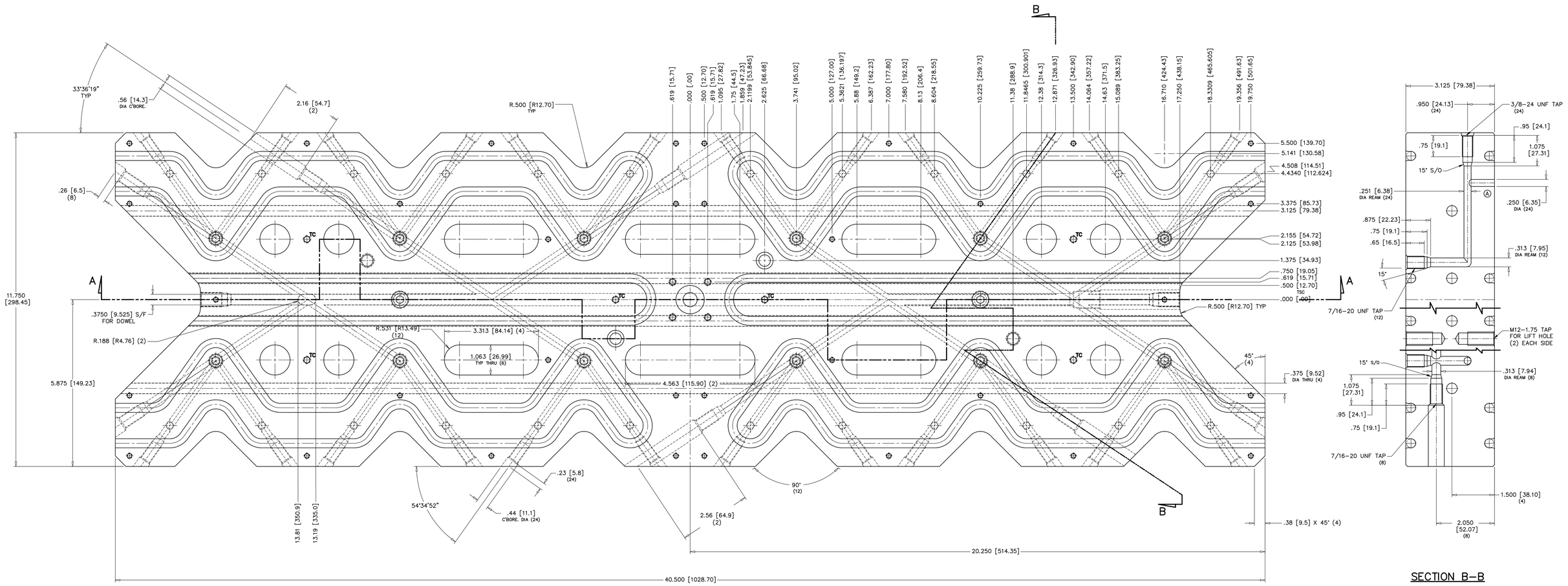

SECTION B–B

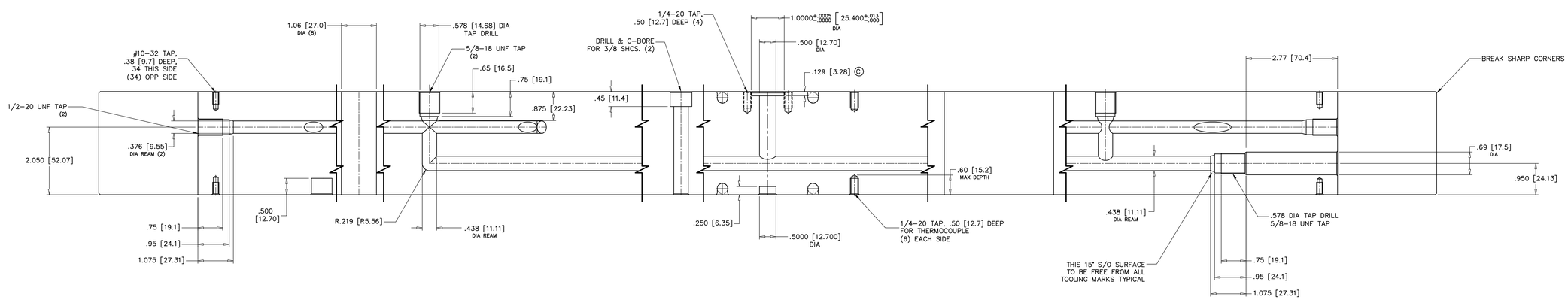

SECTION A–A

SEE SHEET 1977A.012/013 FOR HEATER CHANNEL CONFIGURATION

NOTE:

1.) BRACKETED DIMENSION ARE IN MM

FIRESTARTER

REV.	ECN	DATE	REVISION RECORD	DRN	APPR
C	5004232	08/02/07	DIMENSION .129 [3.28] WAS .124 [3.15]	G.L.	CV
B	5003919	04/15/07	ADDED DUAL DIMENSIONS	TS	CV
A	5003744	02/05/07	REDESIGNED MANIFOLD TO HAVE A SHORTER DROP DISTANCE FOR THE .250 DIA MELT CHANNELS.	DMR	C.V.

TOLERANCES UNLESS NOTED
DIMENSIONS IN INCHES
2 PLACE DECIMAL +/- .01
3 PLACE DECIMAL +/- .001
4 PLACE DECIMAL +/- .0005
DIMENSIONS IN MILLIMETERS
0 PLACE DECIMAL +/- 0.3
1 PLACE DECIMAL +/- 0.25
2 PLACE DECIMAL +/- 0.025
3 PLACE DECIMAL +/- 0.013
ANGULAR: +/- 0° 15'

THE INFORMATION ON THIS DRAWING IS PROPRIETARY TO THE PLASTEK GROUP. THIS INFORMATION SHALL NOT BE DISCLOSED OR REPRODUCED WITHOUT WRITTEN CONSENT OF THE PLASTEK GROUP.

DO NOT SCALE DRAWING

APPROVALS

		DATE
DRN.	J.D.SOLIWODA	01/22/07
CHK'D.	J.D.SOLIWODA	01/29/07
APPROVED:	C. VARKEY	01/29/07
APPROVED		DATE

REFERENCE

MATERIAL: 420SS RAMAX

HDN / FINISH: PRE–HARD

QTY REQ'D: 1 REQ'D

THE PLASTEK GROUP
ERIE, PENNSYLVANIA

DESCRIPTION: **MANIFOLD**
24 CAVITY "GENGHIS" REG SCREW (50785)

SCALE	ECN NUMBER	CUSTOMER
.75 = 1.00	5003744	44000008

SIZE	DRAWING NO.	REV.
E	1977A.009	C