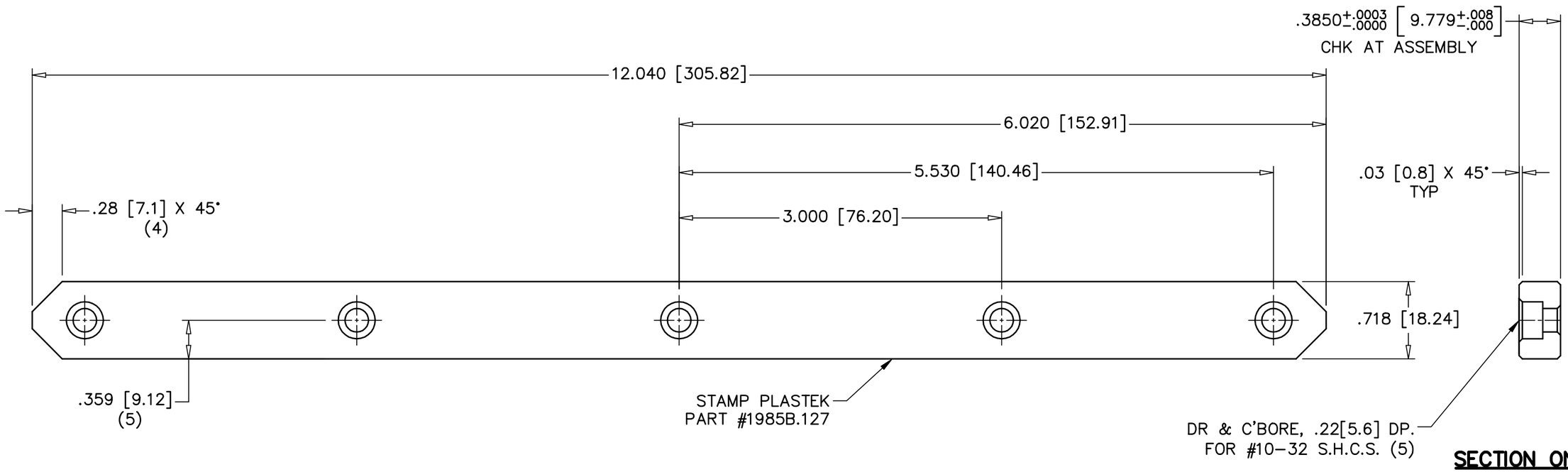


**NOTE:**

1) DIMENSIONS IN BRACKETS ARE IN MM.

METEOR

| REV. | ECN | DATE | REVISION RECORD | DRN | APPR |
|---|---|---|---|---|---|

TOLERANCES
UNLESS NOTED

2 PLACE DECIMAL +/- .01
3 PLACE DECIMAL +/- .001
4 PLACE DECIMAL +/- .0005
ANGULAR: +/- 0° 15'
DIMENSIONS IN INCHES

THE INFORMATION ON THIS DRAWING IS PROPRIETARY TO THE PLASTEK GROUP. THIS INFORMATION SHALL NOT BE DISCLOSED OR REPRODUCED WITHOUT PRIOR WRITTEN CONSENT OF THE PLASTEK GROUP.

DO NOT SCALE DRAWING

| APPROVALS | |
|---|---|
| DRN. J. SOLIWODA | DATE 06/30/15 |
| CHK'D J. SOLIWODA | DATE 06/30/15 |
| APPROVED C. VARKEY | DATE 06/26/15 |
| APPROVED | DATE |

REFERENCE

MATERIAL: O-1 TOOL STEEL

HDN / FINISH: RC 56-58

QTY REQ'D: (8) REQ'D

**THE PLASTEK GROUP**
ERIE, PENNSYLVANIA

DESCRIPTION
**END HEEL BLOCK WEAR PLATE**
(2x24) CAV GENGHIS BARREL (50701)

| SCALE | ECN NUMBER | CUSTOMER |
|---|---|---|
| FULL SIZE | 5009655 | 1000112 |

| SIZE | DRAWING NO. | REV. |
|---|---|---|
| B | 1985B.127 | |