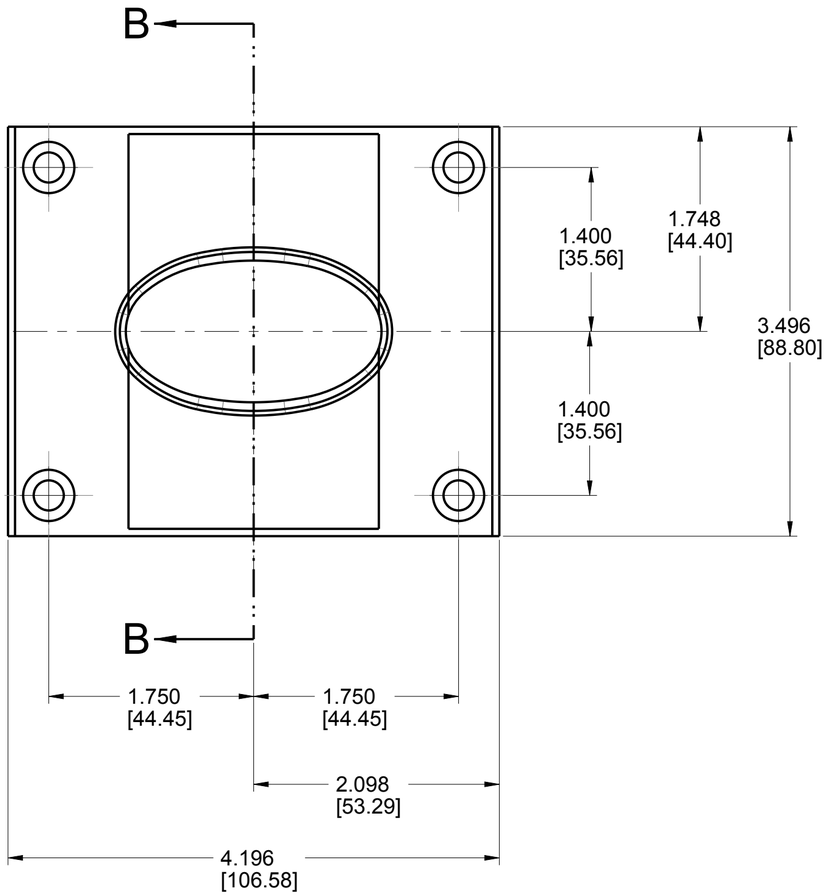

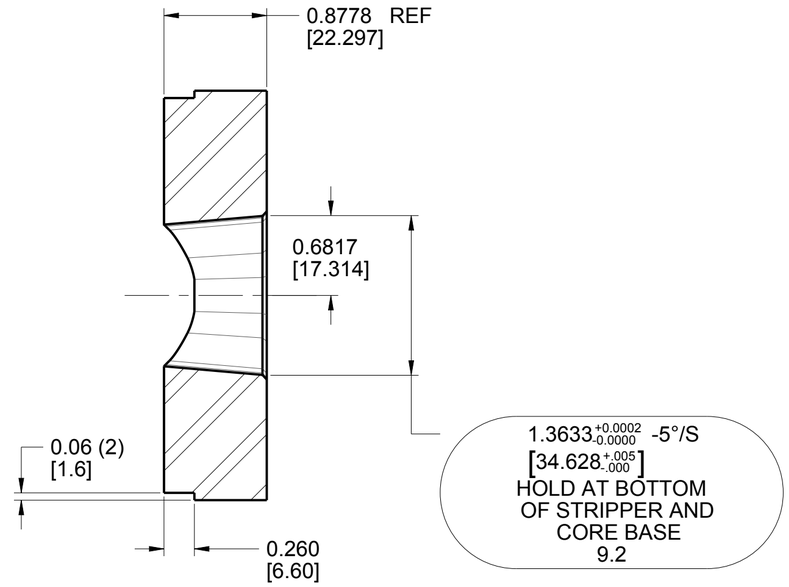

SECTION B-B

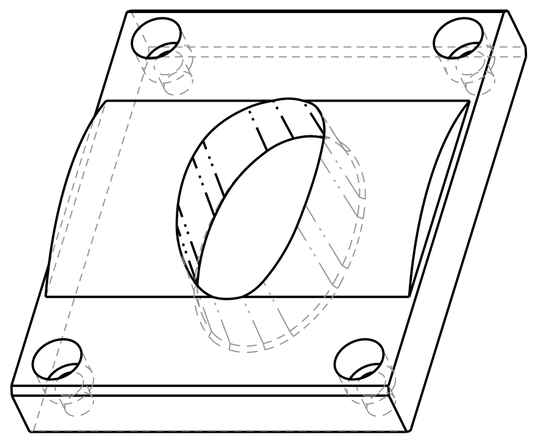

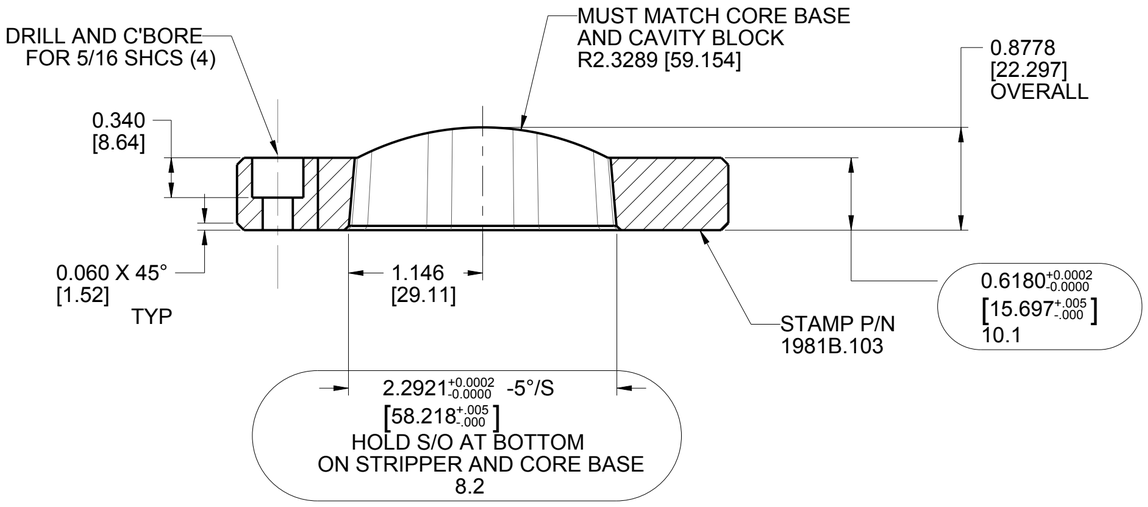

SECTION A-A

NOTE:
- DENOTES CRITICAL DIMENSIONS
PERMANET Q.A. RECORDS MUST BE KEPT.
- DUAL DIMENSIONS IN BRACKET [0.000]
ARE MILLIMETERS

REV.	ECN	DATE	REVISION RECORD	DRN	APPR
A	5003859	02-23-07	CONVERTED TO DUAL DIMENSIONS	RB	CV

APPROVALS		
DRAWN	K FAULHABER	DATE 1-9-07
CHECKED	C.Varkey	DATE 1-21-07
APPROVED	C.Varkey	DATE 1-21-07
REFERENCE NO.		-
FINISH		-
MATERIAL		S-7
HARDNESS	50-52 Rc	QUANTITY REQUIRED 12

THE PLASTEK GROUP
ERIE, PENNSYLVANIA

DESCRIPTION
STRIPPER RING
(12) CAV CAP GENGHIS (METEOR) 60700

SCALE: 1:1	ECN NUMBER	CUSTOMER NUMBER
SHRINKAGE:	5003801	44000008

SIZE	DRAWING NO.	REV.
C	1981B_103	