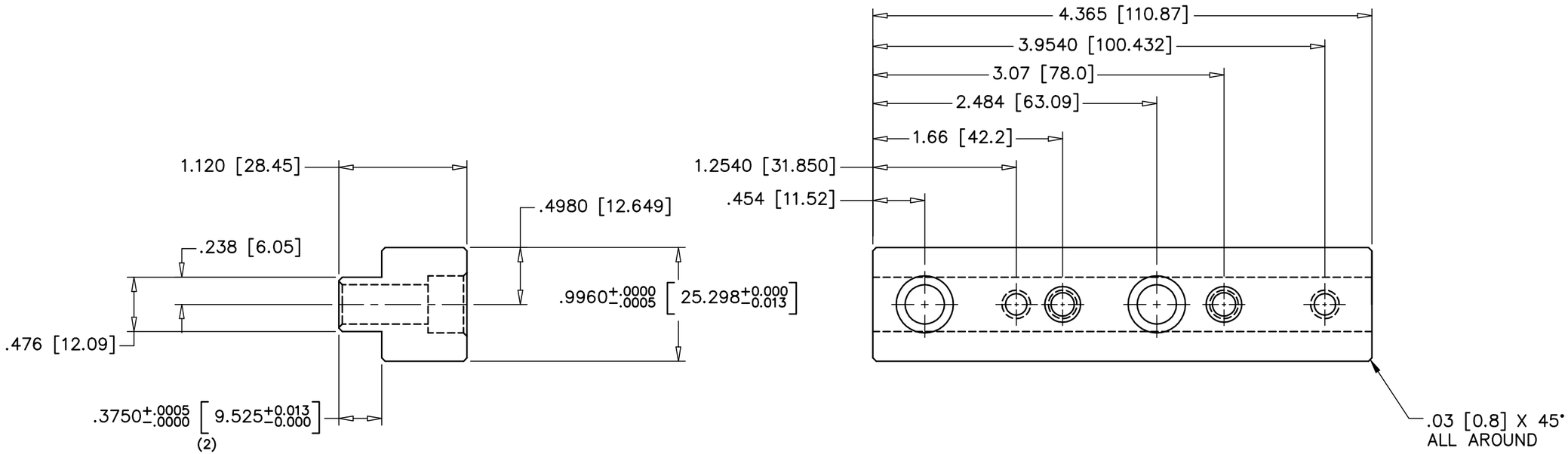

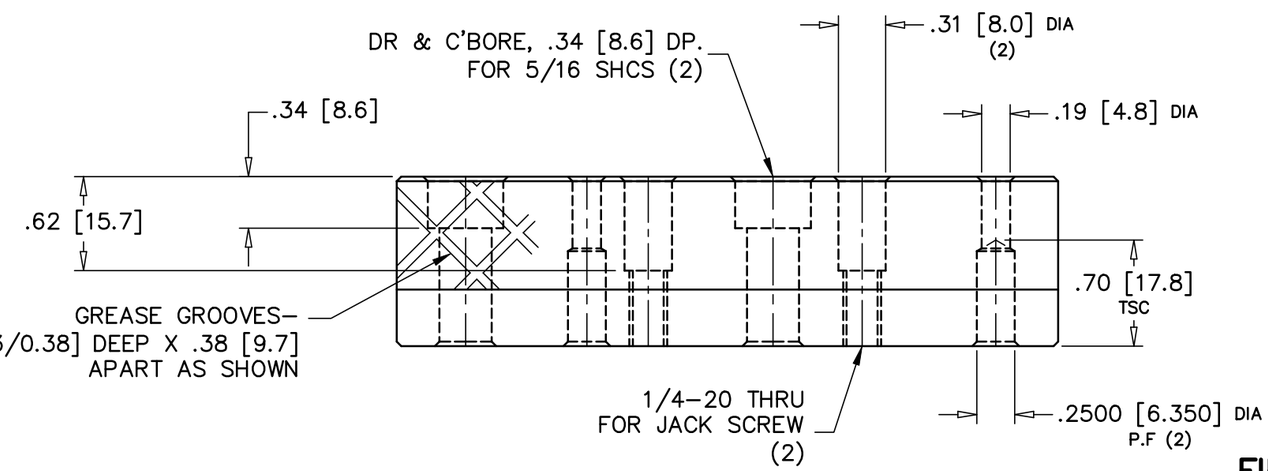

NOTE:

1.) ARMOLOY ALL WEAR SURFACES.

2.) BRACKETED DIMENSION ARE IN MM

FIRESTARTER

REV.	ECN	DATE	REVISION RECORD	DRN	APPR
A	5003919	04/15/07	ADDED DUAL DIMENSIONS	TS	CV

TOLERANCES UNLESS NOTED

DIMENSIONS IN INCHES
2 PLACE DECIMAL +/– .01
3 PLACE DECIMAL +/– .001
4 PLACE DECIMAL +/– .0005

DIMENSIONS IN MILLIMETERS
0 PLACE DECIMAL +/– 0.3
1 PLACE DECIMAL +/– 0.25
2 PLACE DECIMAL +/– 0.025
3 PLACE DECIMAL +/– 0.013
ANGULAR: +/– 0° 15'

THE INFORMATION ON THIS DRAWING IS PROPRIETARY TO THE PLASTEK GROUP. THIS INFORMATION SHALL NOT BE DISCLOSED OR REPRODUCED WITHOUT PRIOR WRITTEN CONSENT OF THE PLASTEK GROUP.

DO NOT SCALE DRAWING

APPROVALS	
DRN. J.D.SOLIWODA	DATE 01/22/07
CHK'D J.D.SOLIWODA	DATE 01/24/07
APPROVED C. VARKEY	DATE 01/24/07
APPROVED	DATE

REFERENCE

MATERIAL
S–7 TOOL STEEL

HDN / FINISH: RC 52–54
QTY REQ'D: 2 REQ'D

THE PLASTEK GROUP
ERIE, PENNSYLVANIA

DESCRIPTION
CENTER GIB
24 CAVITY "GENGHIS" REG SCREW (50785)

SCALE	ECN NUMBER	CUSTOMER
FULL	5003744	44000008

SIZE	DRAWING NO.	REV.
B	1977A.030	A