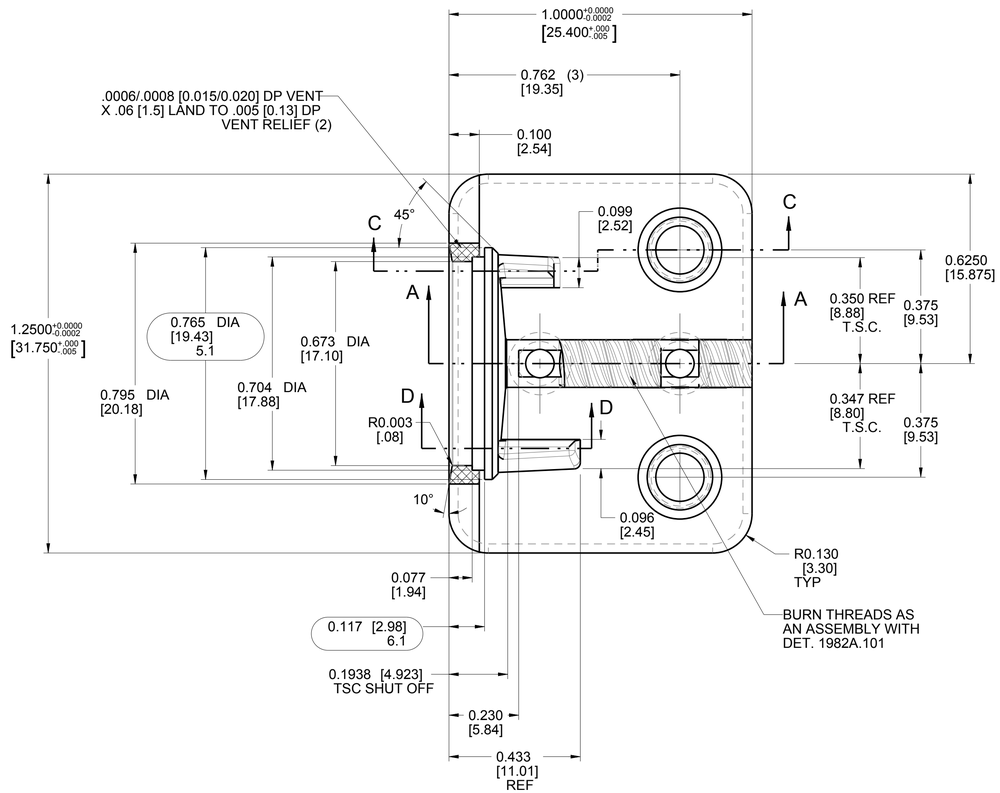

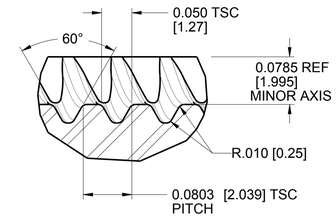

THREAD DATA

SCALE 8:1

DOUBLE LEAD
LEFT HAND THREAD

"T" = .218 [5.54] DIA	3.1
"E" = .157 [3.99] DIA	4.1

LEAD = .1604 [4.074]
PITCH = .0803 [2.040]

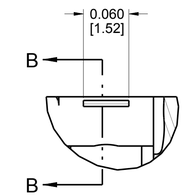

DETAIL A
SCALE 10:1

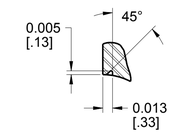

SECTION B-B
SCALE 10:1

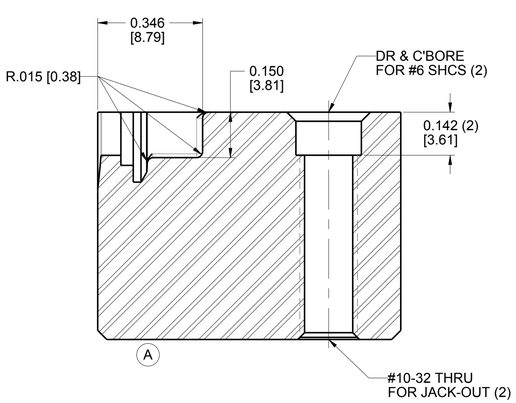

SECTION C-C

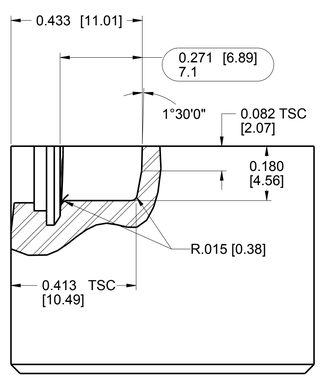

SECTION D-D

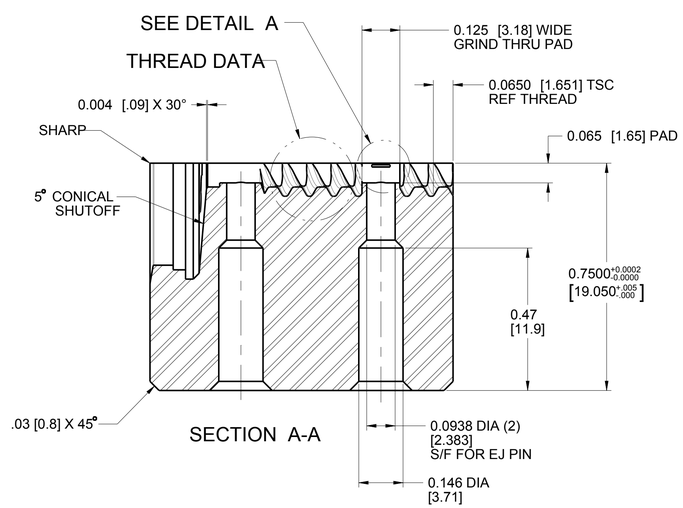

SECTION A-A

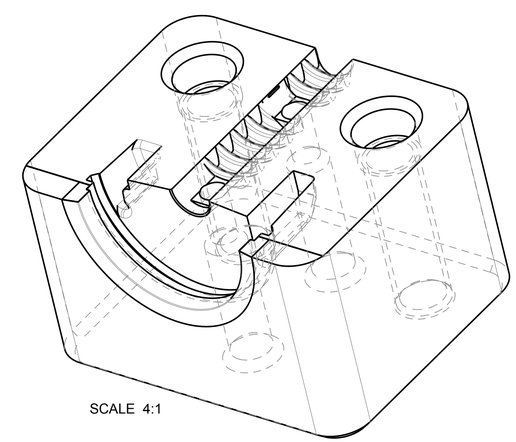

SCALE 4:1

NOTE:
DIMENSIONS SHOWN IN
BRACKETS [0.000] ARE MILLIMETERS

REV.	ECN	DATE	REVISION RECORD	DRN	APPR
B	5003918	04-04-07	CONVERTED TO DUAL DIMENSIONS	RWB	CV
A	-	01-17-07	REMOVED (2) .057 DIA HOLES	DMR	DMR

APPROVALS

DRAWN: J.D.SOLIWODA	DATE: 12/08/06	
CHECKED: J.D.SOLIWODA	DATE: 12/08/06	
APPROVED: C. VARKEY	DATE: 12/07/06	
REFERENCE NO.: 1915A_102 REV O		
FINISH: -	SHRINKAGE: -	
MATERIAL: 420 S.S. (STAVAX)		
HARDNESS: 48-50 Rc	QUANTITY REQUIRED: 12	

THE PLASTEK GROUP
ERIE, PENNSYLVANIA

DESCRIPTION
B/H CORE SUB INSERT
12 CAV METEOR REG. SCREW (50786)

SCALE: 4:1	ECN NUMBER	CUSTOMER NUMBER
	5003688	44000008

SIZE	DRAWING NO.	REV.
D	1982A_102	