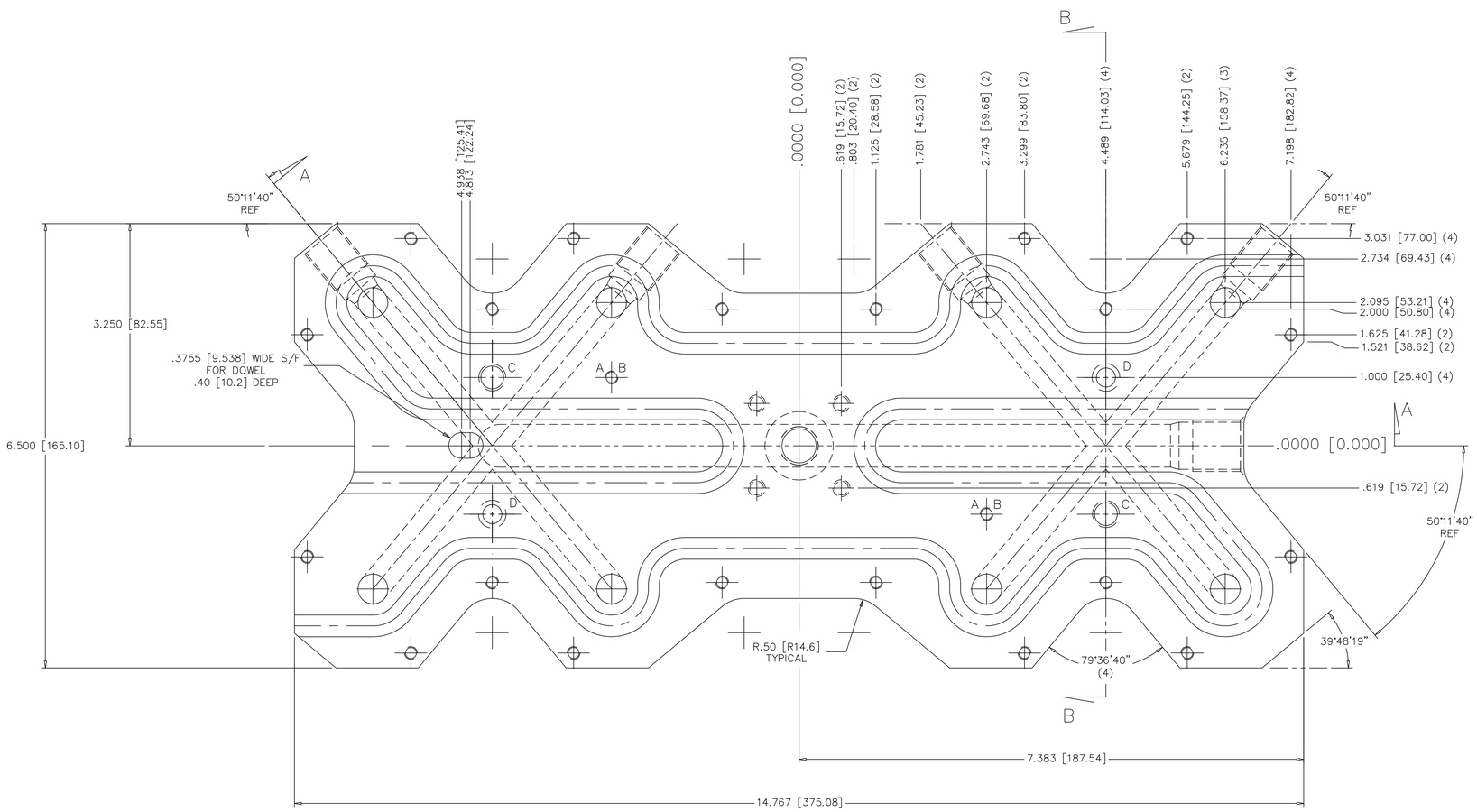

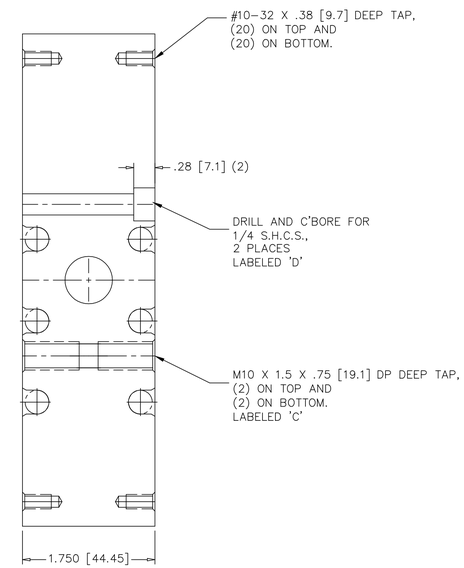

SECTION B–B

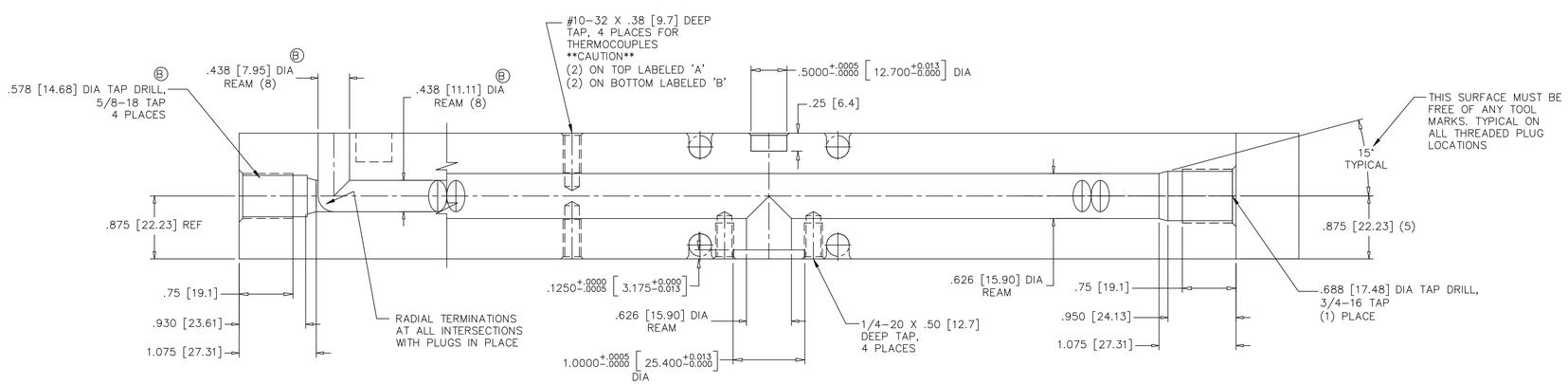

SECTION A–A

NOTE:

1.) FOR HEATER CHANNEL CONFIGURATION SEE DRAWING 1988A.025

2.) BRACKETED DIMENSION ARE IN MM

FIRESTARTER

REV.	ECN	DATE	REVISION RECORD	DRN	APPR
C	5004219	07/30/07	CHANGE HEATER CHANNLE BACK TO ORIGINAL DESIGN MODIFY 'B' TAPS TO 'A' LOCATIONS	MSO	MSO
B	5004209	07/21/07	.438 WAS .312 5/8-18 WAS 7/16-20 CHANGE HEATER CHANNEL	MSO	MSO
A	5003924	03/15/07	ADDED DUAL DIMENSIONS	BFR	CV

TOLERANCES UNLESS NOTED
DIMENSIONS IN INCHES
2 PLACE DECIMAL +/- .01
3 PLACE DECIMAL +/- .001
4 PLACE DECIMAL +/- .0005
DIMENSIONS IN MILLIMETERS
0 PLACE DECIMAL +/- 0.3
1 PLACE DECIMAL +/- 0.25
2 PLACE DECIMAL +/- 0.025
3 PLACE DECIMAL +/- 0.013
ANGULAR: +/- 0° 15'

THE INFORMATION ON THIS DRAWING IS PROPRIETARY TO THE PLASTEK GROUP. THIS INFORMATION SHALL NOT BE DISCLOSED OR REPRODUCED WITHOUT PRIOR WRITTEN CONSENT OF THE PLASTEK GROUP.

DO NOT SCALE DRAWING

APPROVALS		
DRN.	M. ST. ONGE	DATE 02/09/07
CHK'D	C. VARKEY	DATE 02/09/07
APPROVED	C. VARKEY	DATE 02/10/07
APPROVED		DATE

REFERENCE

MATERIAL: RAMAX

HDN / FINISH | QTY REQ'D 1

THE PLASTEK GROUP
ERIE, PENNSYLVANIA

DESCRIPTION: MANIFOLD
8 CAVITY "GENGHIS" CAP (50716)

SCALE	ECN NUMBER	CUSTOMER
FULL	5003741	44000008

SIZE	DRAWING NO.	REV.
D	1988A.019	C