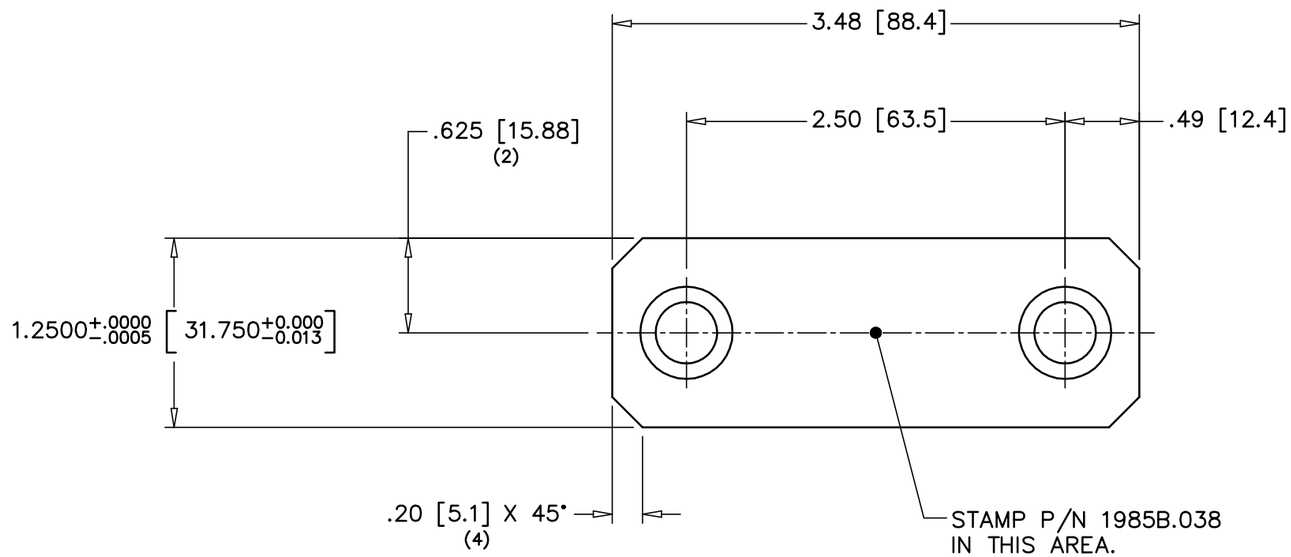

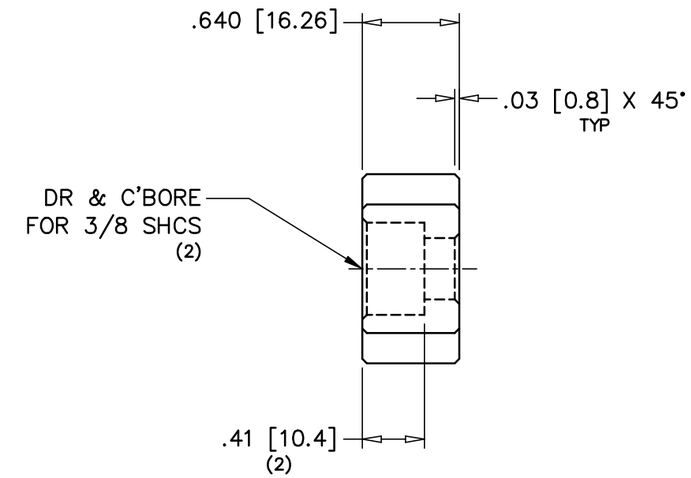

NOTE:

1.) BRACKETED DIMENSIONS ARE IN MM

METEOR

REV.	ECN	DATE	REVISION RECORD	DRN	APPR

TOLERANCES UNLESS NOTED

DIMENSIONS IN INCHES
2 PLACE DECIMAL +/− .01
3 PLACE DECIMAL +/− .001
4 PLACE DECIMAL +/− .0005

DIMENSIONS IN MILLIMETERS
0 PLACE DECIMAL +/− 0.3
1 PLACE DECIMAL +/− 0.25
2 PLACE DECIMAL +/− 0.025
3 PLACE DECIMAL +/− 0.013
ANGULAR: +/− 0° 15'

THE INFORMATION ON THIS DRAWING IS PROPRIETARY TO THE PLASTEK GROUP. THIS INFORMATION SHALL NOT BE DISCLOSED OR REPRODUCED WITHOUT PRIOR WRITTEN CONSENT OF THE PLASTEK GROUP.

DO NOT SCALE DRAWING

APPROVALS	
DRN. G. Losasso	DATE 11/03/14
CHK'D	DATE
APPROVED	DATE
APPROVED	DATE
REFERENCE	
MATERIAL 0–1 TOOL STEEL	
HDN / FINISH 56–58 Rc	QTY REQ'D (64) REQ'D

THE PLASTEK GROUP
ERIE, PENNSYLVANIA

DESCRIPTION
KEY / RETAINER (CORE)
(2X24) CAV METEOR BARREL (50701)

SCALE	ECN NUMBER	CUSTOMER
FULL	5009196	44000008

SIZE	DRAWING NO.	REV.
B	1985B.038	