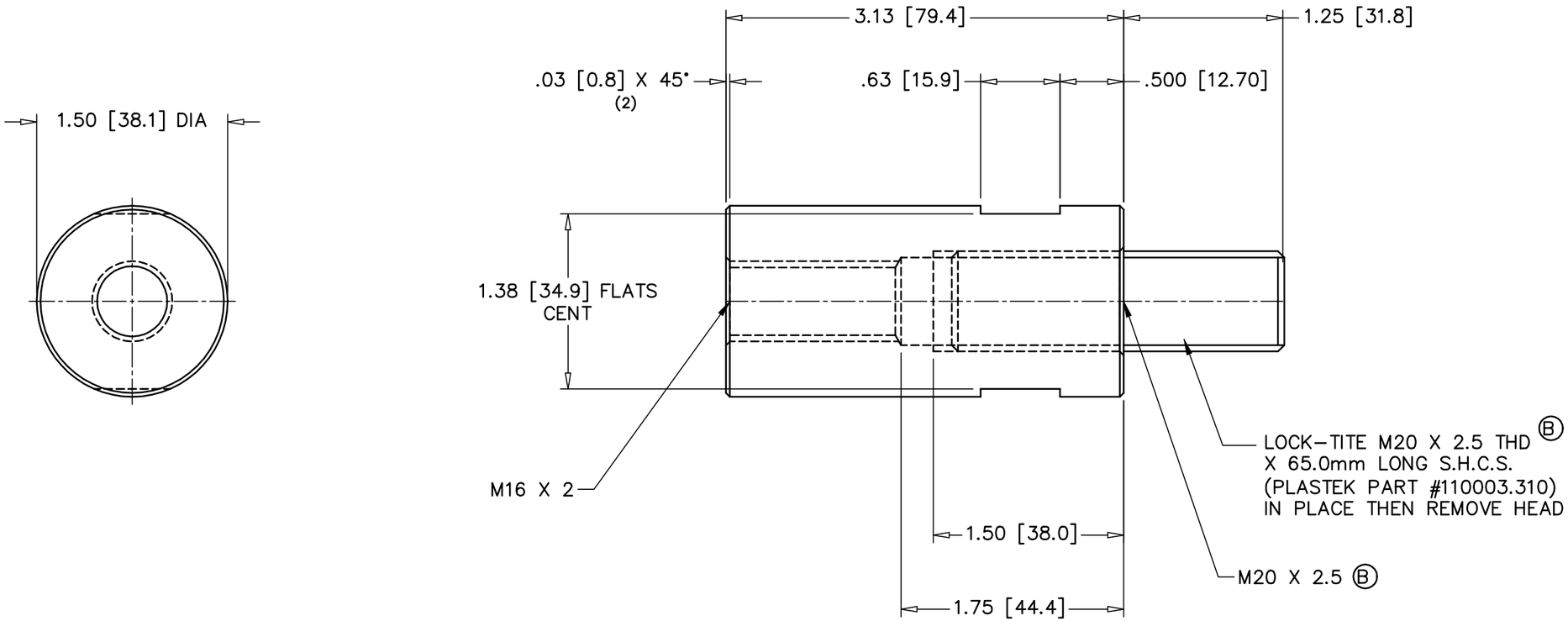

NOTE:

1.) BRACKETED DIMENSION ARE IN MM

FIRESTARTER

REV.	ECN	DATE	REVISION RECORD	DRN	APPR
B	5003800	05/03/07	M20 WAS M16 THRU 110003.310 WAS 110003.266	MSO	MSO
A	5003924	03/15/07	ADDED DUAL DIMENSIONS	BFR	CV

TOLERANCES UNLESS NOTED

DIMENSIONS IN INCHES
2 PLACE DECIMAL +/- .01
3 PLACE DECIMAL +/- .001
4 PLACE DECIMAL +/- .0005

DIMENSIONS IN MILLIMETERS
0 PLACE DECIMAL +/- 0.3
1 PLACE DECIMAL +/- 0.25
2 PLACE DECIMAL +/- 0.025
3 PLACE DECIMAL +/- 0.013
ANGULAR: +/- 0° 15'

THE INFORMATION ON THIS DRAWING IS PROPRIETARY TO THE PLASTEK GROUP. THIS INFORMATION SHALL NOT BE DISCLOSED OR REPRODUCED WITHOUT PRIOR WRITTEN CONSENT OF THE PLASTEK GROUP.

DO NOT SCALE DRAWING

APPROVALS	
DRN. M. ST. ONGE	DATE 02/20/07
CHK'D C. VARKEY	DATE 02/20/07
APPROVED C. VARKEY	DATE 02/20/07
APPROVED	DATE
REFERENCE	
MATERIAL CRS	
HDN / FINISH	QTY REQ'D 1

THE PLASTEK GROUP
ERIE, PENNSYLVANIA

DESCRIPTION
EYEBOLT EXTENSION
8 CAVITY "GENGHIS" CAP (50716)

SCALE	ECN NUMBER	CUSTOMER
FULL	5003741	44000008

SIZE	DRAWING NO.	REV.
B	1988A.023	B