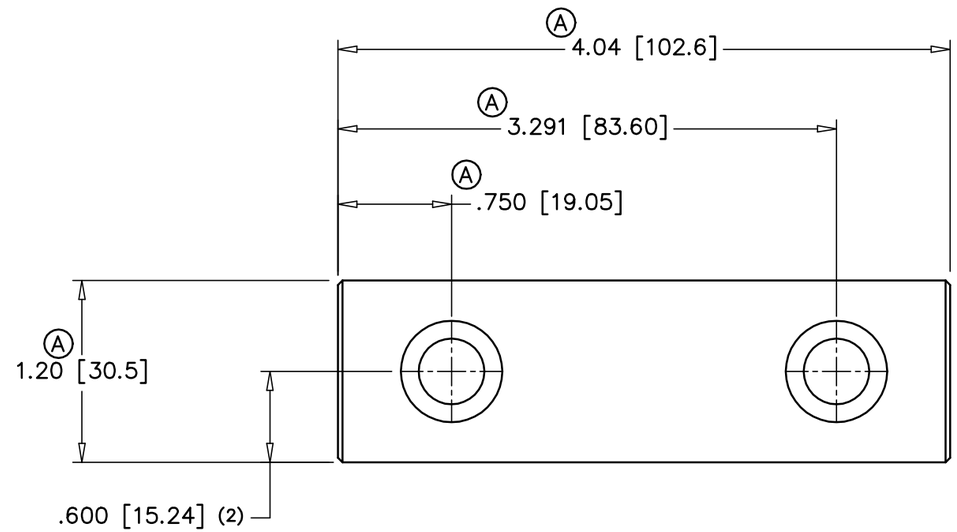

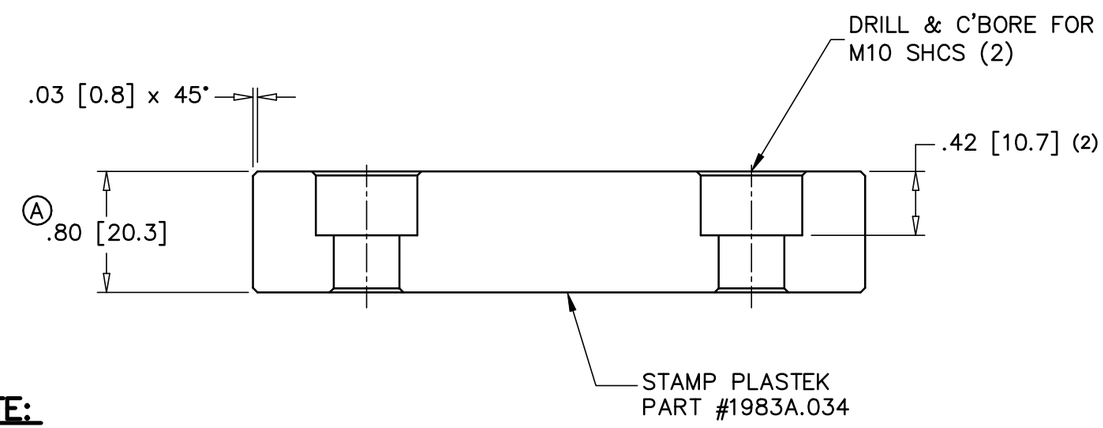

NOTE:

1.) BRACKETED DIMENSION ARE IN MM

METEOR

REV.	ECN	DATE	REVISION RECORD	DRN	APPR
B	5003917	03/31/07	ADDED DUAL DIMENSIONS	BFR	CV
A	5003689	01/09/07	.80 WAS .62; .750 WAS .500; 1.20 WAS .85; 4.04 WAS 3.54; 3.291 WAS 3.041.	JDS	CV

TOLERANCES UNLESS NOTED

DIMENSIONS IN INCHES
2 PLACE DECIMAL +/- .01
3 PLACE DECIMAL +/- .001
4 PLACE DECIMAL +/- .0005

DIMENSIONS IN MILLIMETERS
0 PLACE DECIMAL +/- 0.3
1 PLACE DECIMAL +/- 0.25
2 PLACE DECIMAL +/- 0.025
3 PLACE DECIMAL +/- 0.013
ANGULAR: +/- 0° 15'

THE INFORMATION ON THIS DRAWING IS PROPRIETARY TO THE PLASTEK GROUP. THIS INFORMATION SHALL NOT BE DISCLOSED OR REPRODUCED WITHOUT PRIOR WRITTEN CONSENT OF THE PLASTEK GROUP.

DO NOT SCALE DRAWING

APPROVALS	
DRN. C. RUTLEDGE	DATE 12/22/06
CHK'D J. SOLIWODA	DATE 12/22/06
APPROVED C. VARKEY	DATE 12/22/06
APPROVED	DATE
REFERENCE	
MATERIAL C.R.S.	
HDN / FINISH	QTY REQ'D 8

THE PLASTEK GROUP
ERIE, PENNSYLVANIA

DESCRIPTION
MOLD STRAP
2X24 CAV "GENGHIS" SCREW **(50786)**

SCALE	ECN NUMBER	CUSTOMER
FULL SIZE	5003689	44000008

SIZE	DRAWING NO.	REV.
B	1983A.034	B