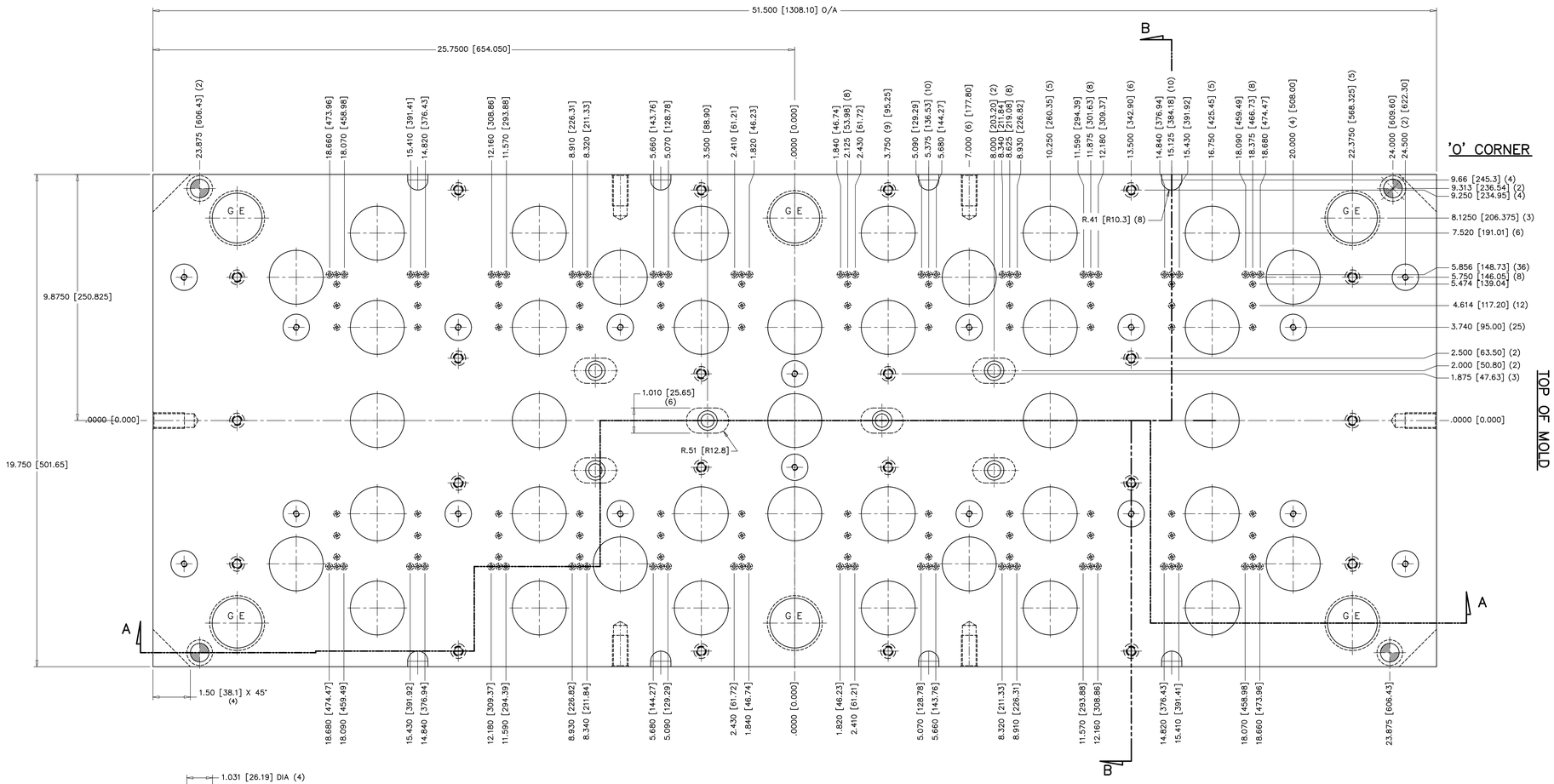

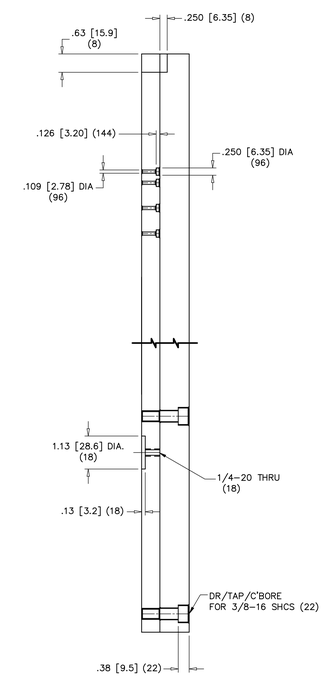

SECTION B–B

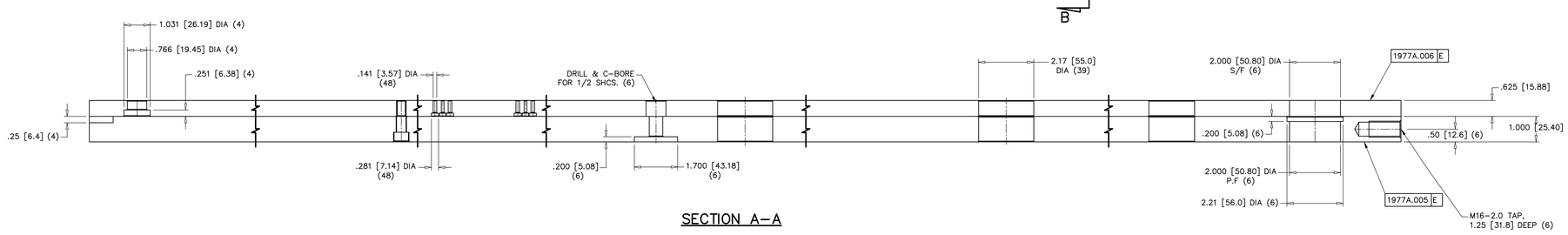

SECTION A–A

NOTE:

1.) BRACKETED DIMENSION ARE IN MM

FIRESTARTER

REV.	ECN	DATE	REVISION RECORD	DRN	APPR
A	5003919	04/15/07	ADDED DUAL DIMENSIONS	TS	CV

DO NOT SCALE DRAWING

TOLERANCES UNLESS NOTED
DIMENSIONS IN INCHES:
2 PLACE DECIMAL +/- .01
3 PLACE DECIMAL +/- .001
4 PLACE DECIMAL +/- .0005
DIMENSIONS IN MILLIMETERS:
0 PLACE DECIMAL +/- 0.3
1 PLACE DECIMAL +/- 0.25
2 PLACE DECIMAL +/- 0.025
3 PLACE DECIMAL +/- 0.013
ANGULAR: +/- 0° 15'

THE INFORMATION ON THIS DRAWING IS PROPRIETARY TO THE PLASTEK GROUP. IT IS UNPUBLISHED AND SHALL NOT BE DISCLOSED OR REPRODUCED WITHOUT PRIOR WRITTEN CONSENT OF THE PLASTEK GROUP.

APPROVALS		DATE
DRN.	J.D.SOLIWODA	01/22/07
CHK'D.	J.D.SOLIWODA	01/29/07
APPROVED	C. VARKEY	01/29/07
APPROVED		DATE

REFERENCE

MATERIAL: 420SS

HDN / FINISH: PRE–HARD

QTY REQ'D: (1) EACH

THE PLASTEK GROUP
ERIE, PENNSYLVANIA

DESCRIPTION: **EJECTOR PLATES**
24 CAVITY "GENGHIS" REG SCREW (50785)

SCALE	ECN NUMBER	CUSTOMER
.50 = 1.00	5003744	44000008

SIZE	DRAWING NO.	REV.
E	1977A.005/006	A