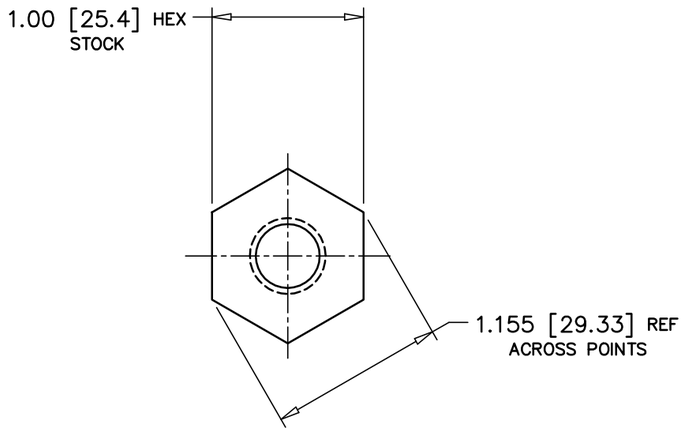

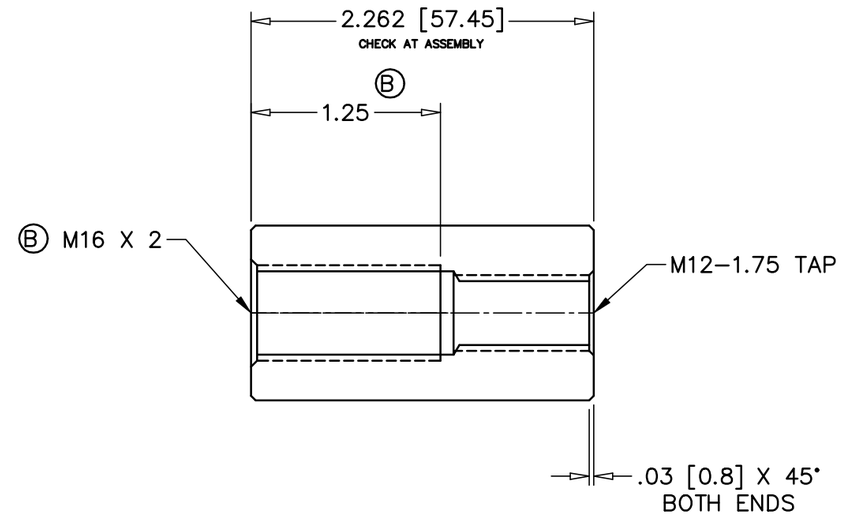

SECTION ON C/L

NOTE:

1.) BRACKETED DIMENSION ARE IN MM

FIRESTARTER

REV.	ECN	DATE	REVISION RECORD	DRN	APPR
C	5003973	08/14/07	QTY WAS 1	MSO	MSO
B	5003973	04/19/07	ADDED M16 TAP TO ONE SIDE QTY WAS 8	MSO	MSO
A	5003941	04/10/07	ADDED DUAL DIMENSIONS	BFR	CV

TOLERANCES UNLESS NOTED

DIMENSIONS IN INCHES
2 PLACE DECIMAL +/– .01
3 PLACE DECIMAL +/– .001
4 PLACE DECIMAL +/– .0005

DIMENSIONS IN MILLIMETERS
0 PLACE DECIMAL +/– 0.3
1 PLACE DECIMAL +/– 0.25
2 PLACE DECIMAL +/– 0.025
3 PLACE DECIMAL +/– 0.013
ANGULAR: +/– 0° 15'

THE INFORMATION ON THIS DRAWING IS PROPRIETARY TO THE PLASTEK GROUP. THIS INFORMATION SHALL NOT BE DISCLOSED OR REPRODUCED WITHOUT PRIOR WRITTEN CONSENT OF THE PLASTEK GROUP.

DO NOT SCALE DRAWING

APPROVALS	
DRN. M. ST. ONGE	DATE 01/20/07
CHK'D C. VARKEY	DATE 02/02/07
APPROVED C. VARKEY	DATE 01/20/07
APPROVED	DATE
REFERENCE	
MATERIAL C.R.S.	
HDN / FINISH	QTY REQ'D 9 ©

THE PLASTEK GROUP
ERIE, PENNSYLVANIA

DESCRIPTION
K.O. EXTENSION
1 X 12 GENGHIS FACTORY SEAL (50551)

SCALE	ECN NUMBER	CUSTOMER
FULL SIZE	5003777	44000008

SIZE	DRAWING NO.	REV.
B	1975A.020	C