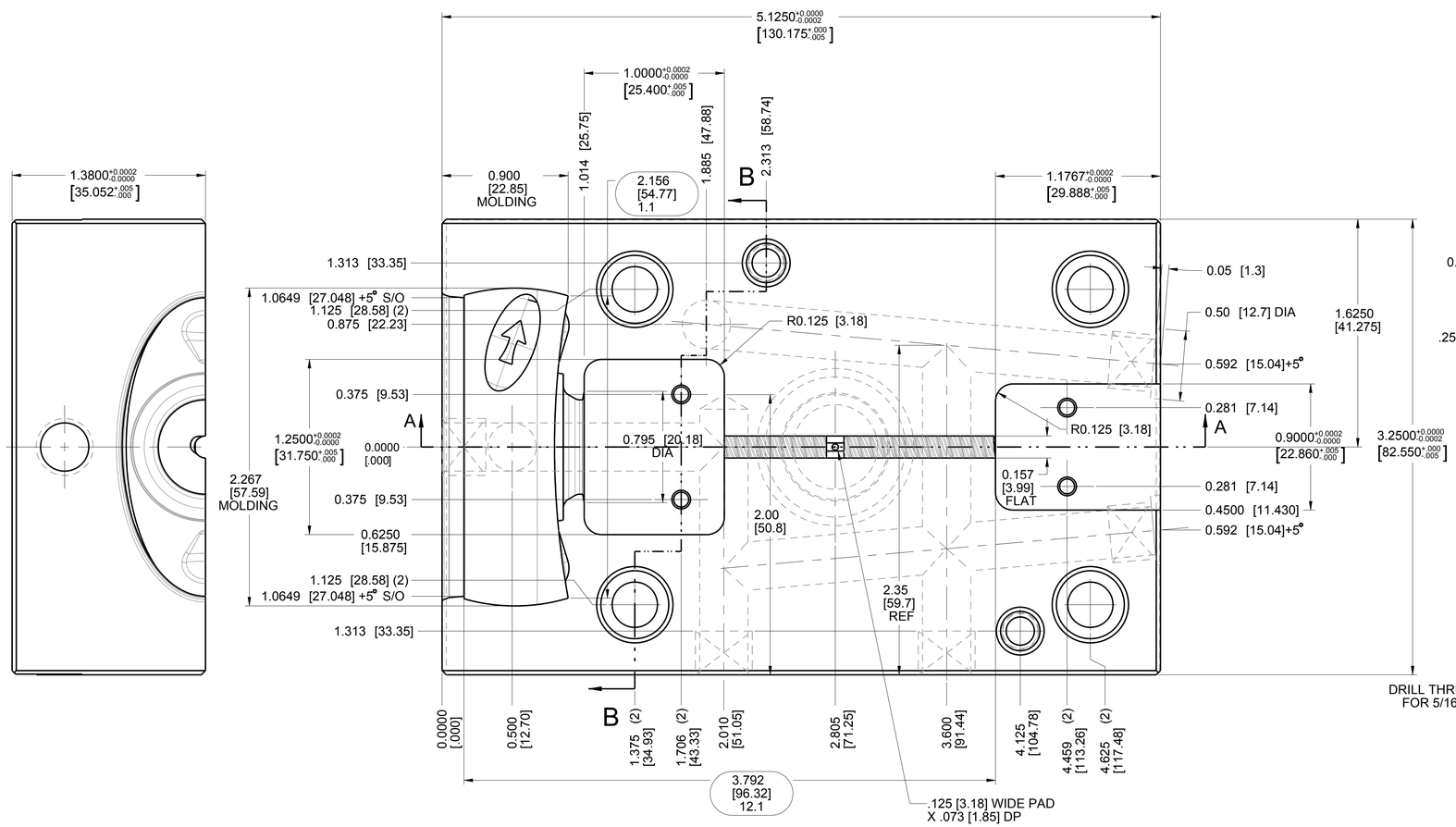

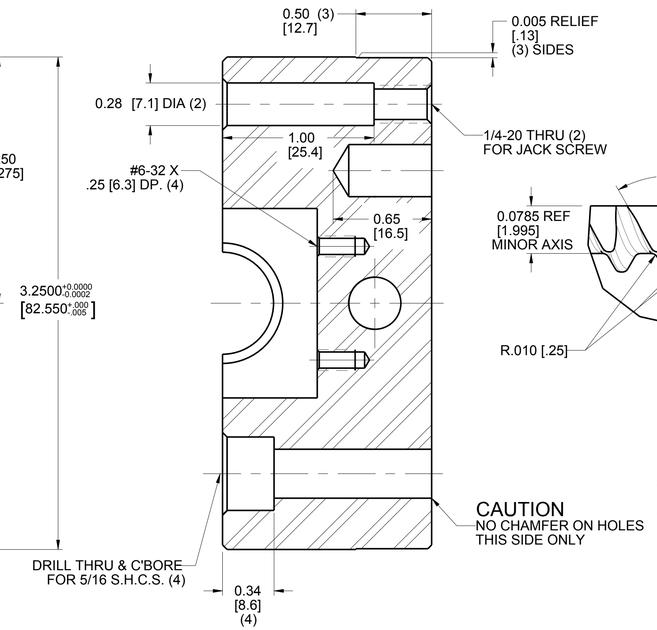

SECTION B-B

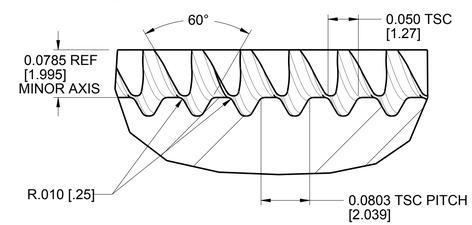

THREAD DATA
SCALE 8:1

DOUBLE LEAD
LEFT HAND THREAD

"T" = .218 [5.54] DIA	3.1
"E" = .157 [3.99] DIA	4.1

LEAD = .1604 [4.074]
PITCH = .0803 [2.040]

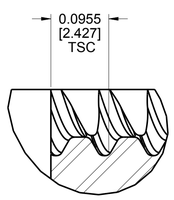

DETAIL V
SCALE 8:1

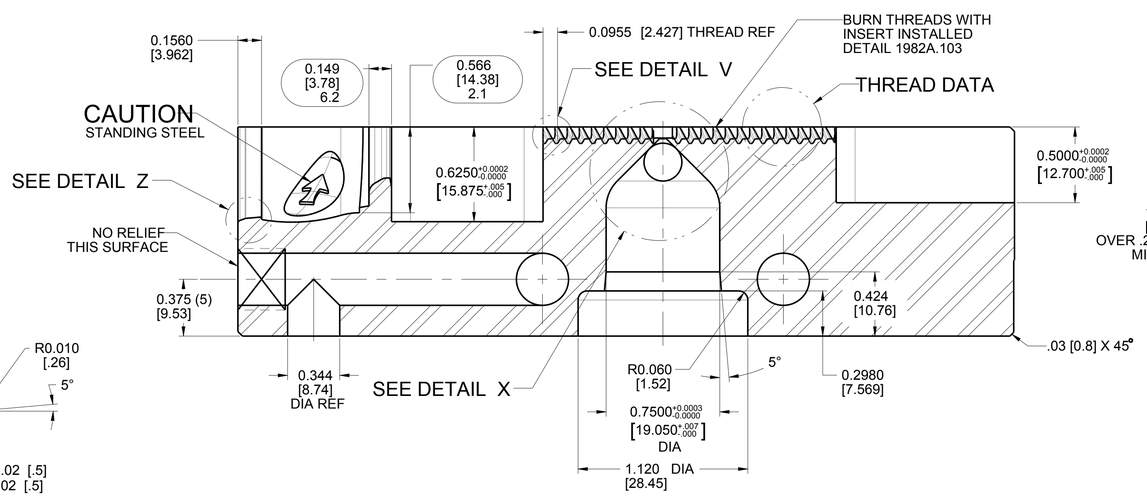

SECTION A-A

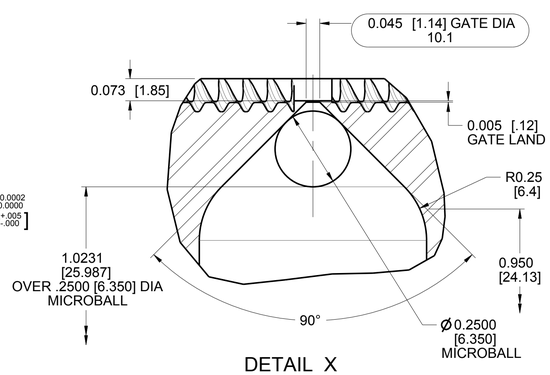

DETAIL X
SCALE 4:1

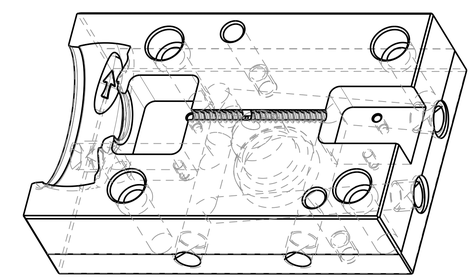

SCALE 1:1

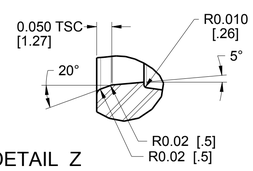

DETAIL Z
SCALE 4:1

NOTE:
DIMENSIONS SHOWN IN BRACKETS [0.000] ARE MILLIMETERS

ALL WATERLINES ARE:
.344 [8.74] DIA
1/8-27 NPT (5)
PLUG WHERE SHOWN

REV.	ECN	DATE	REVISION RECORD	DRN	APPR
A	5003918	04-03-07	CONVERTED TO DUAL DIMENSIONS	RWB	CV

APPROVALS			
DRAWN J.D.SOLIWODA	DATE 12/08/06	THE PLASTEK GROUP ERIE, PENNSYLVANIA	
CHECKED J.D.SOLIWODA	DATE 12/08/06	DESCRIPTION F/H CAVITY BLOCK 12 CAV METEOR REG. SCREW (50786)	
APPROVED C. VARKEY	DATE 12/07/06		
REFERENCE NO. 1915A_100 REV O		SCALE: 2:1	ECN NUMBER 5003688 / CUSTOMER NUMBER 44000008
FINISH -		SHRINKAGE: -	
MATERIAL 420 S.S. (STAVAX)		SIZE D	DRAWING NO. 1982A_100 / REV.
HARDNESS 48-50 Rc	QUANTITY REQUIRED 12		