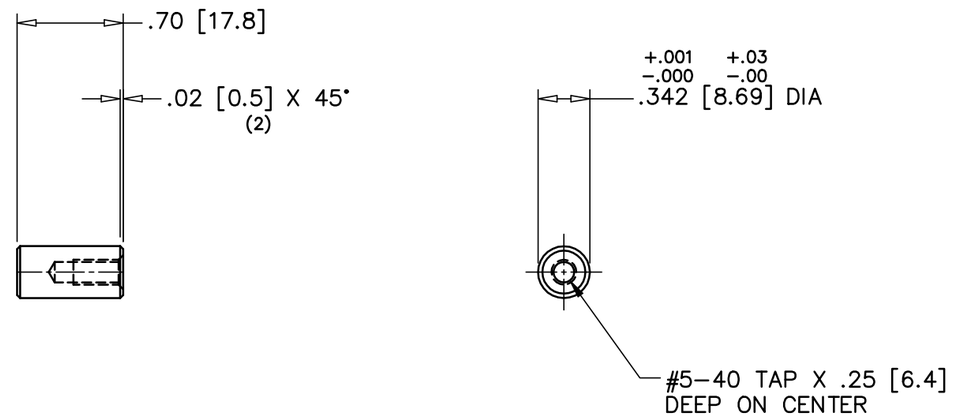

NOTE:

1.) BRACKETED DIMENSION ARE IN MM

METEOR

REV.	ECN	DATE	REVISION RECORD	DRN	APPR
A	5003851	03/15/07	ADDED DUAL DIMENSIONS	BFR	CV

TOLERANCES UNLESS NOTED

DIMENSIONS IN INCHES
2 PLACE DECIMAL +/− .01
3 PLACE DECIMAL +/− .001
4 PLACE DECIMAL +/− .0005

DIMENSIONS IN MILLIMETERS
0 PLACE DECIMAL +/− 0.3
1 PLACE DECIMAL +/− 0.25
2 PLACE DECIMAL +/− 0.025
3 PLACE DECIMAL +/− 0.013
ANGULAR: +/− 0° 15'

THE INFORMATION ON THIS DRAWING IS PROPRIETARY TO THE PLASTEK GROUP. THIS INFORMATION SHALL NOT BE DISCLOSED OR REPRODUCED WITHOUT PRIOR WRITTEN CONSENT OF THE PLASTEK GROUP.

DO NOT SCALE DRAWING

APPROVALS	
DRN. J.D.SOLIWODA	DATE 01/09/07
CHK'D J.D.SOLIWODA	DATE 01/12/07
APPROVED C. VARKEY	DATE 01/12/07
APPROVED	DATE
REFERENCE	
MATERIAL BRASS	
HDN / FINISH	QTY REQ'D 1

THE PLASTEK GROUP
ERIE, PENNSYLVANIA

DESCRIPTION
TOP CLAMP PLATE WATERLINE PLUG
48 CAV "GENGHIS" PLATFORM MOLD (50715)

SCALE	ECN NUMBER	CUSTOMER
FULL SIZE	5003695	44000008

SIZE	DRAWING NO.	REV.
B	1979A.024	A