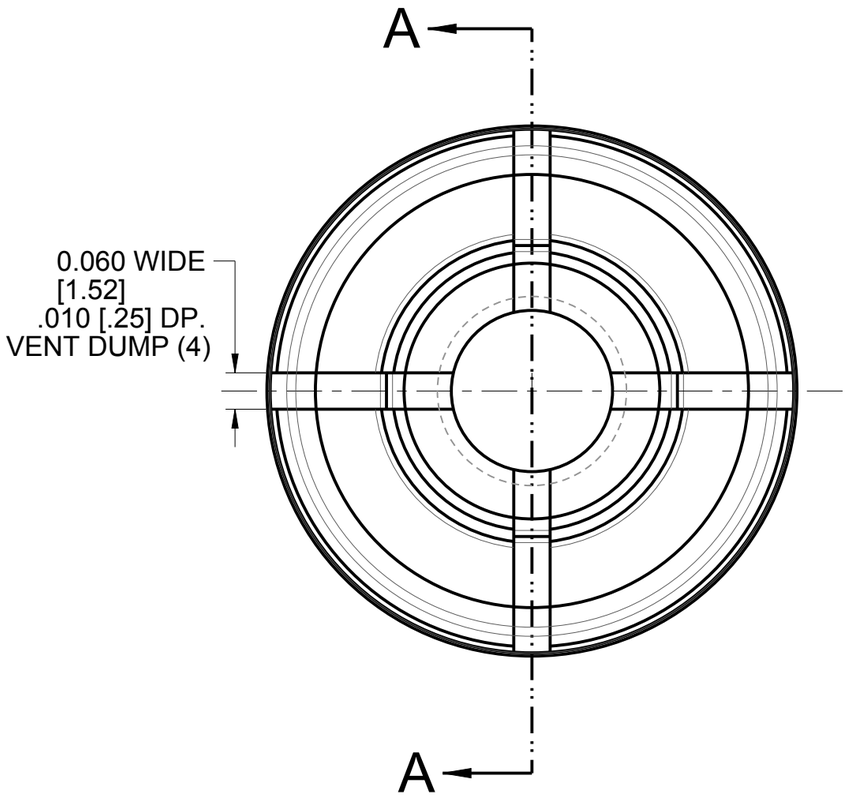

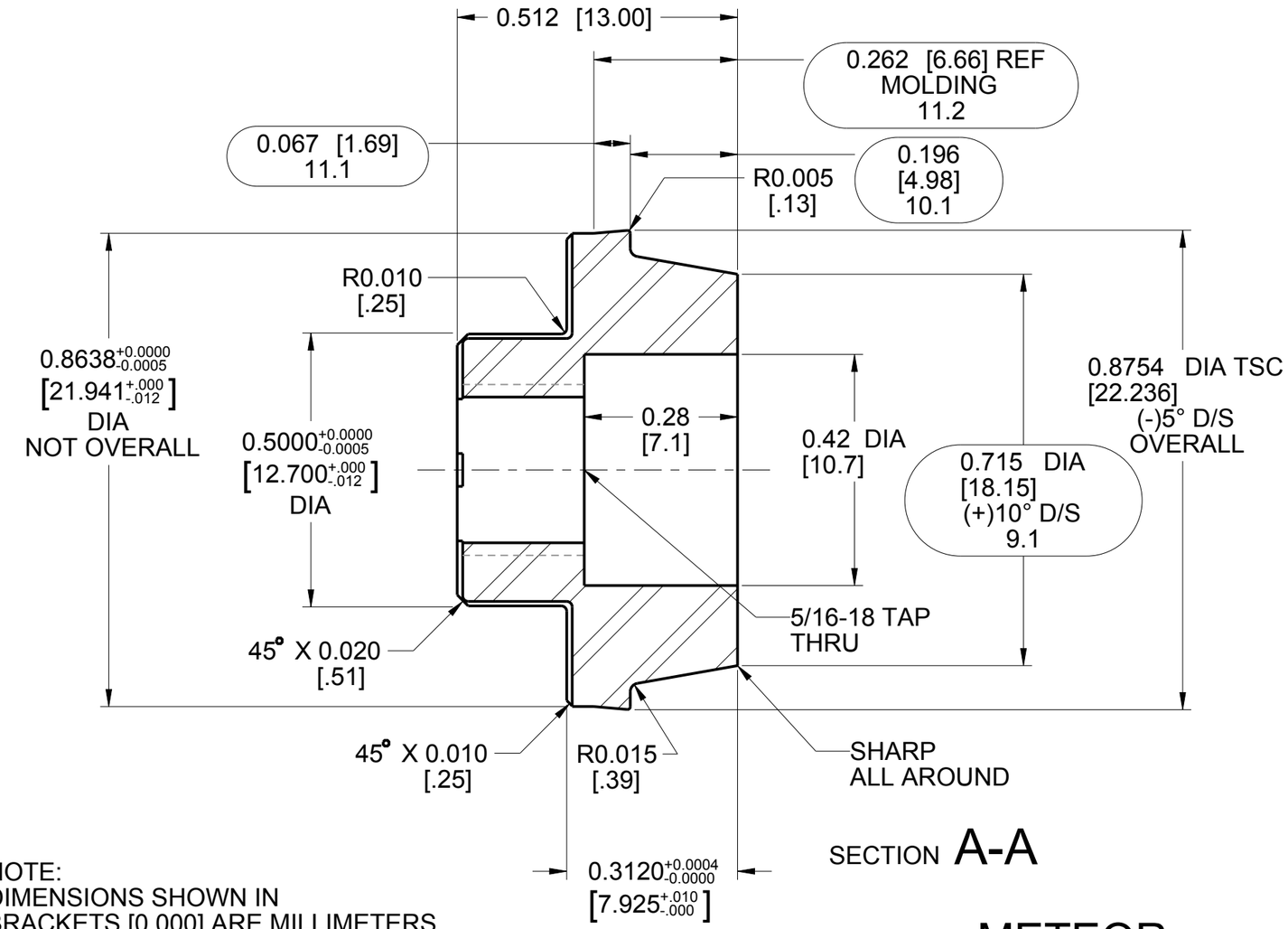

SECTION A-A

NOTE:
DIMENSIONS SHOWN IN
BRACKETS [0.000] ARE MILLIMETERS

METEOR

TOLERANCES	APPROVALS		THE PLASTEK GROUP	
UNLESS NOTED -DIMENSIONS IN MILLIMETERS- 0 PLACE DECIMAL +/- 0.3 1 PLACE DECIMAL +/- 0.25 2 PLACE DECIMAL +/- 0.025 3 PLACE DECIMAL +/- 0.013 -DIMENSION IN INCHES- 2 PLACE DECIMAL +/- 0.01 3 PLACE DECIMAL +/- 0.001 4 PLACE DECIMAL +/- 0.0005 ANGULAR +/- 0°15'	DESIGNER -	DATE -	ERIE, PENNSYLVANIA	THE PLASTEK GROUP
	DRAWN J. SOLIWODA	DATE 10/03/14	DESCRIPTION INSERT (2X24) CAV GENGHIS BARREL (50701)	
	CHECKED -	DATE -		
	APPROVED C. VARKEY	DATE 10/03/14		
THE INFORMATION ON THIS DRAWING IS PROPRIETARY TO THE PLASTEK GROUP. THIS INFORMATION SHALL NOT BE DISCLOSED OR REPRODUCED WITHOUT PRIOR WRITTEN CONSENT OF THE PLASTEK GROUP.	REFERENCE NO. -		SCALE 4:1	ECN NUMBER 5009196 / CUSTOMER NUMBER 44000008
	MATERIAL 420SS (STAVAX)		SHRINK -	
DO NOT SCALE DRAWING	HARDNESS 48-50 Rc	QUANTITY REQ'D 48	SIZE B / DRAWING NO. 1985B_105	REV. -