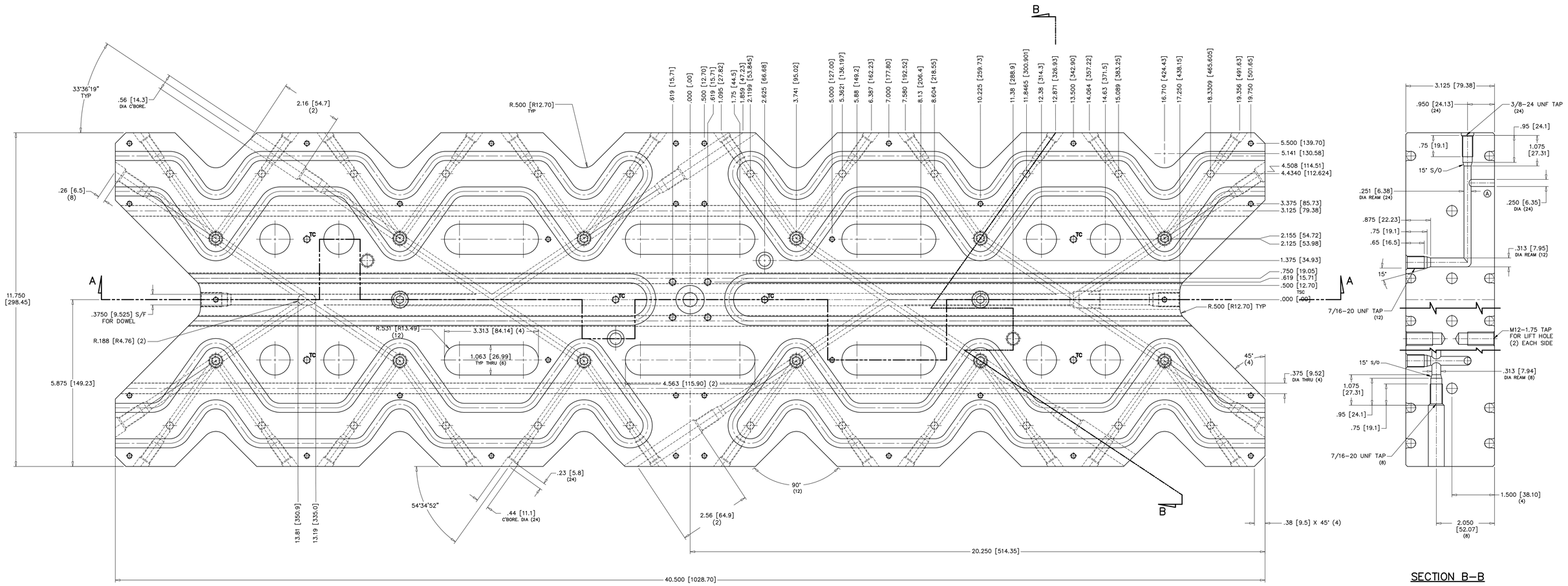

SECTION B–B

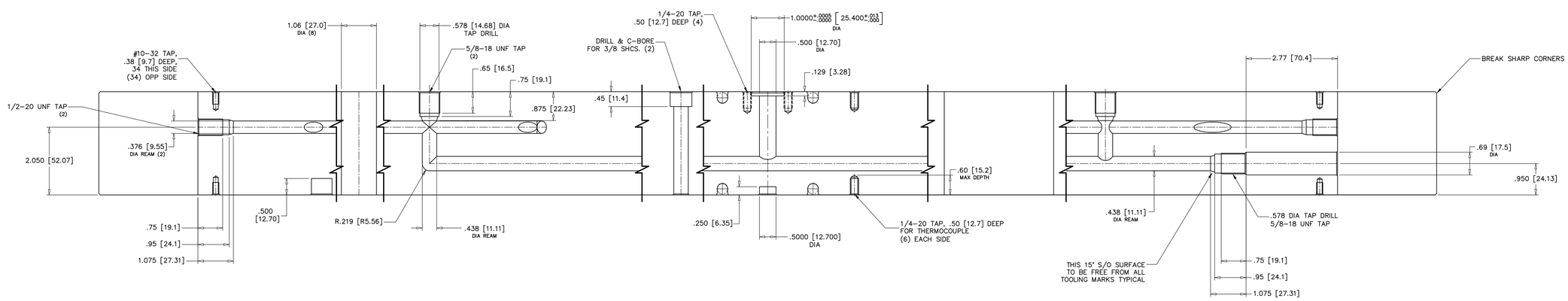

SECTION A–A

SEE SHEET 1977B.012/013 FOR HEATER CHANNEL CONFIGURATION

NOTE:

1.) BRACKETED DIMENSIONS ARE IN MM

FIRESTARTER

REV.	ECN	DATE	REVISION RECORD	DRN	APPR

TOLERANCES UNLESS NOTED
DIMENSIONS IN INCHES
2 PLACE DECIMAL +/- .01
3 PLACE DECIMAL +/- .001
4 PLACE DECIMAL +/- .0005
DIMENSIONS IN MILLIMETERS
0 PLACE DECIMAL +/- 0.3
1 PLACE DECIMAL +/- 0.25
2 PLACE DECIMAL +/- 0.025
3 PLACE DECIMAL +/- 0.013
ANGULAR: +/- 0° 15'

THE INFORMATION ON THIS DRAWING IS PROPRIETARY TO THE PLASTEK GROUP. THIS INFORMATION SHALL NOT BE DISCLOSED OR REPRODUCED WITHOUT WRITTEN CONSENT OF THE PLASTEK GROUP.

DO NOT SCALE DRAWING

APPROVALS		DATE
DRN.	G. Lossasso	09/30/14
CHK'D		
APPROVED		
APPROVED		

REFERENCE

MATERIAL: 420SS RAMAX
HDN / FINISH: PRE-HARD
QTY REQ'D: 1 REQ'D

THE PLASTEK GROUP
ERIE, PENNSYLVANIA

DESCRIPTION: **MANIFOLD**
24 CAV FIRESTARTER REG SCREW (50785)

SCALE	ECN NUMBER	CUSTOMER
.75 = 1.00	5009188	44000008

SIZE	DRAWING NO.	REV.
E	1977B.009	