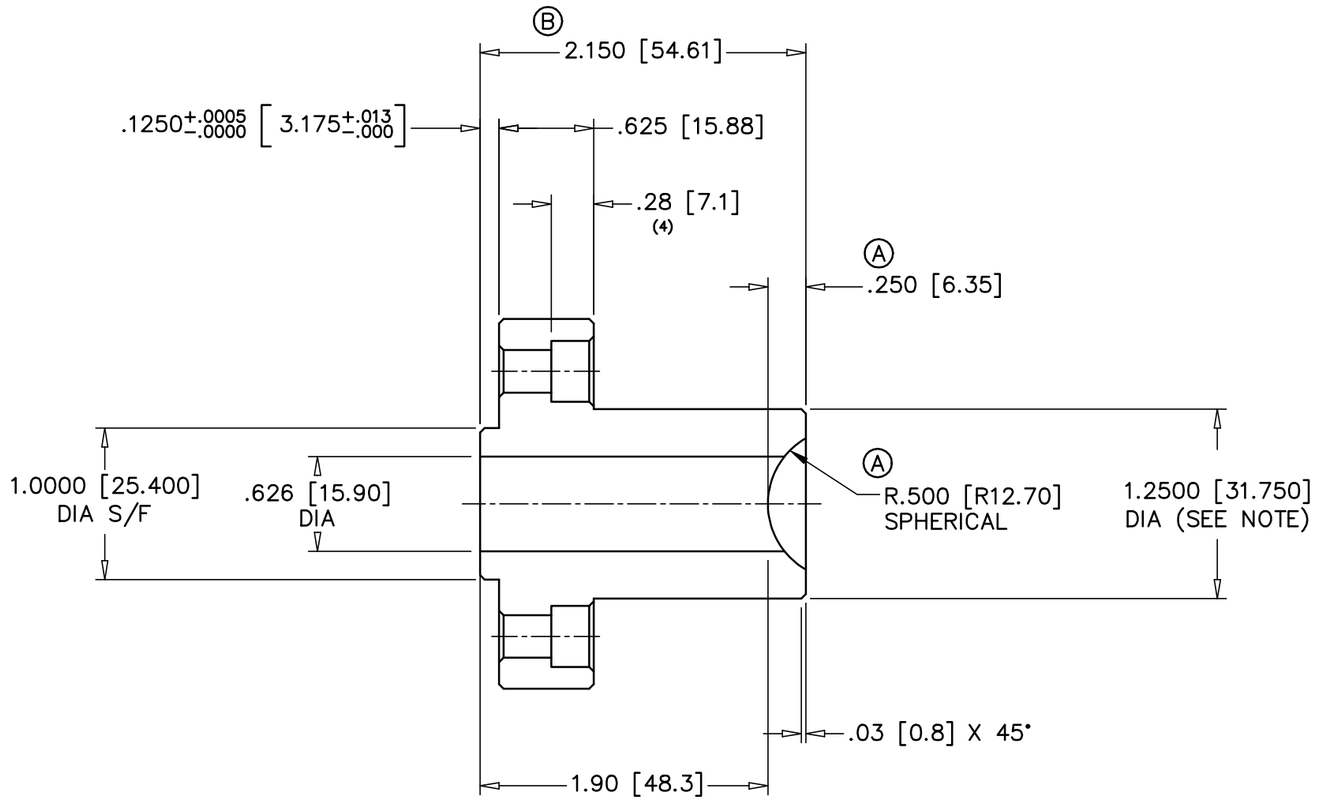

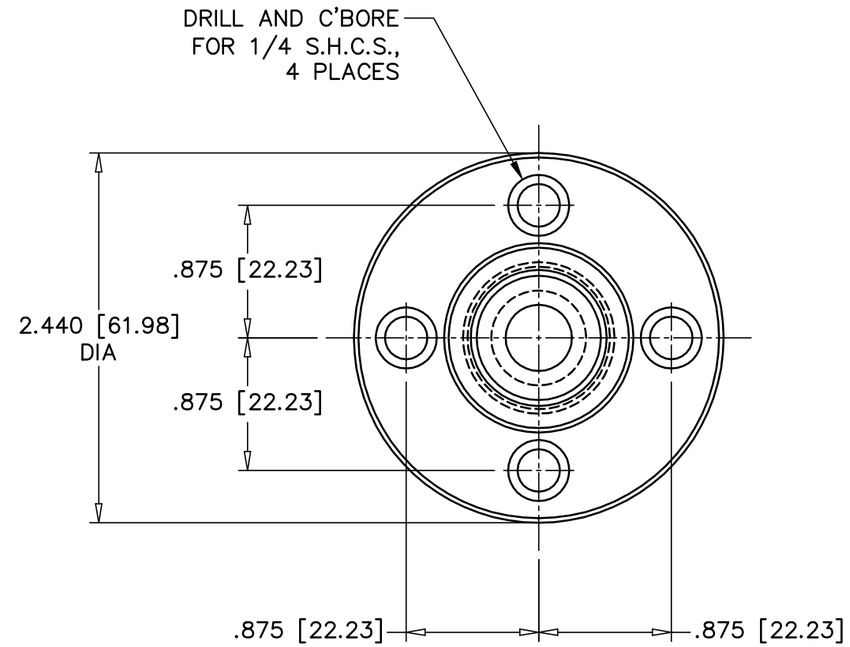

SECTION ON C/L

NOTE:

1.) 1.2500 [31.750] DIA SHOULD BE A LIGHT PRESS FIT WITH THE COIL HEATER. CHECK I.D. OF THE HEATER.

2.) BRACKETED DIMENSIONS ARE IN MM

FIRESTARTER

REV.	ECN	DATE	REVISION RECORD	DRN	APPR
B	5009781	11/11/15	2.150 WAS 2.275.	JDS	CV
A	5009781	10/27/15	.250 DEEP WAS .188 R.500 SPHERICAL WAS R.630 ADDED (U.S.) TO DESCRIPTION	JDS	CV

TOLERANCES UNLESS NOTED

DIMENSIONS IN INCHES
2 PLACE DECIMAL +/- .01
3 PLACE DECIMAL +/- .001
4 PLACE DECIMAL +/- .0005

DIMENSIONS IN MILLIMETERS
0 PLACE DECIMAL +/- 0.3
1 PLACE DECIMAL +/- 0.25
2 PLACE DECIMAL +/- 0.025
3 PLACE DECIMAL +/- 0.013
ANGULAR: +/- 0° 15'

THE INFORMATION ON THIS DRAWING IS PROPRIETARY TO THE PLASTEK GROUP. THIS INFORMATION SHALL NOT BE DISCLOSED OR REPRODUCED WITHOUT PRIOR WRITTEN CONSENT OF THE PLASTEK GROUP.

DO NOT SCALE DRAWING

APPROVALS	
DRN. G. Losasso	DATE 09/05/14
CHK'D	DATE
APPROVED	DATE
APPROVED	DATE
REFERENCE 910001.011	
MATERIAL AISI H-13	
HDN / FINISH Rc 48/50	QTY REQ'D 1

THE PLASTEK GROUP
ERIE, PENNSYLVANIA

DESCRIPTION
SPRUE BUSHING (U.S.) Ⓐ
12 CAV. FIRESTARTER REXONA CAP 50552

SCALE	ECN NUMBER	CUSTOMER
FULL	5009187	44000008

SIZE	DRAWING NO.	REV.
B	1976B.009	B