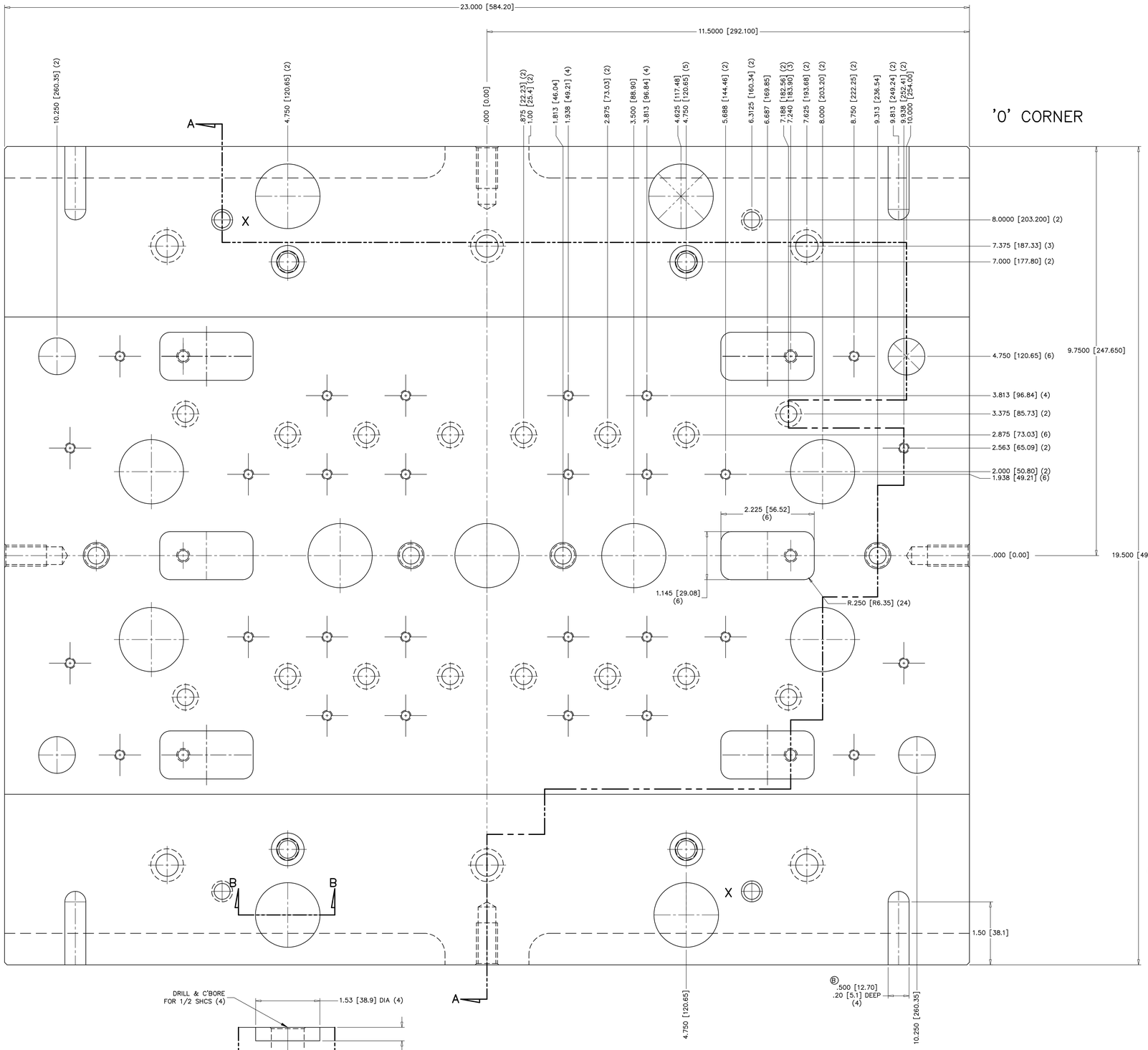

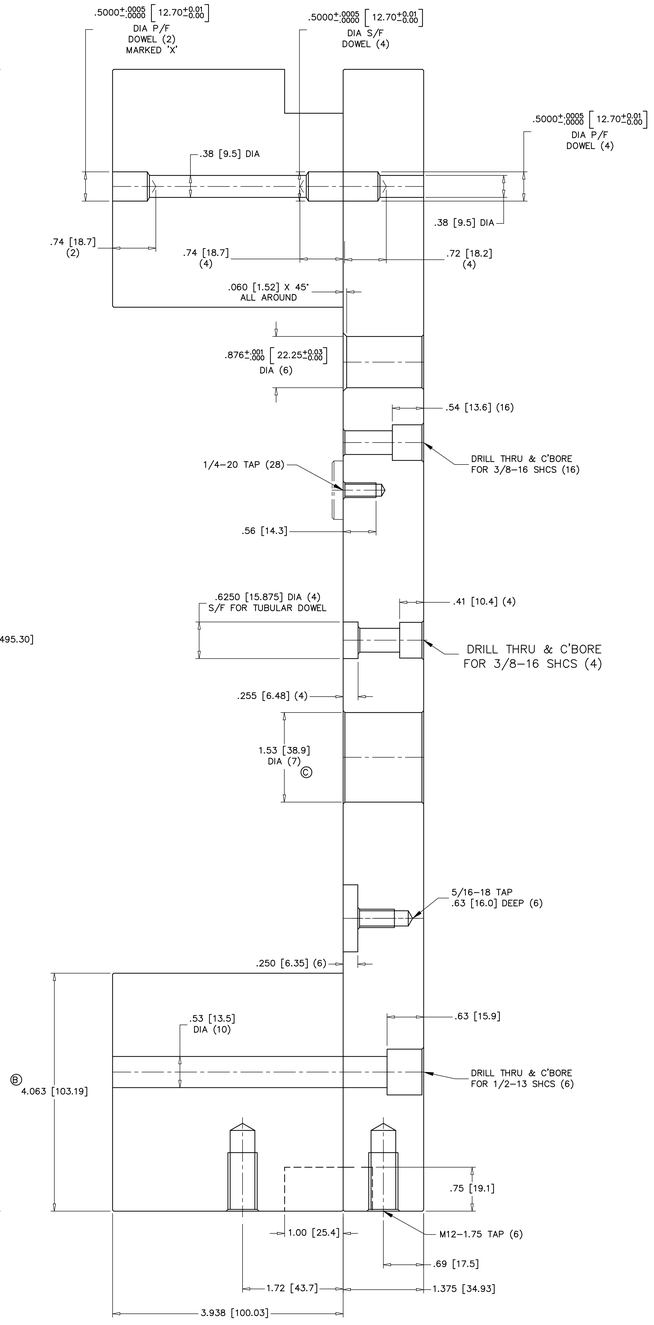

SECTION "A-A"

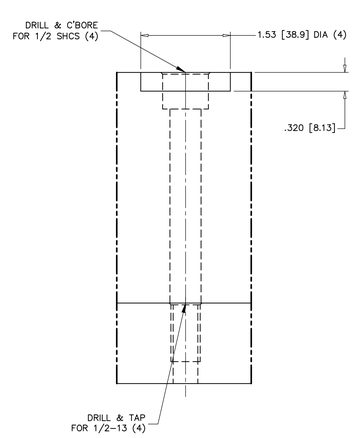

SECTION "B-B"

NOTE:

1.) BRACKETED DIMENSION ARE IN MM

METEOR/FIRESTARTER

REV.	ECN	DATE	REVISION RECORD	DRN	APPR
C	5004115	08/15/07	ADD CENTETR KO	MSO	MSO
B	5003943	04/09/07	ADDED RAIL WIDTH ADDED VENT DIMENSIONS	BFR	CV
A	5003943	03/31/07	ADDED DUAL DIMENSIONS	BFR	CV

DO NOT SCALE DRAWING

TOLERANCES UNLESS NOTED
DIMENSIONS IN INCHES:
2 PLACE DECIMAL +/- .01
3 PLACE DECIMAL +/- .001
4 PLACE DECIMAL +/- .0005
DIMENSIONS IN MILLIMETERS
0 PLACE DECIMAL +/- 0.3
1 PLACE DECIMAL +/- 0.25
2 PLACE DECIMAL +/- 0.025
3 PLACE DECIMAL +/- 0.013
ANGULAR: +/- 0° 15'

THE INFORMATION ON THIS DRAWING IS PROPRIETARY TO THE PLASTEK GROUP. IT MUST NOT BE DISCLOSED, SHALL NOT BE DISCLOSED OR REPRODUCED WITHOUT PRIOR WRITTEN CONSENT OF THE PLASTEK GROUP.

APPROVALS

DRN.	S. Schaefer	DATE 01/11/07
CHK'D	R. Blake	DATE 02/17/07
APPROVED		DATE
APPROVED		DATE

REFERENCE

MATERIAL: 420 S.S.

HDN / FINISH | QTY REQ'D: AS NOTED

THE PLASTEK GROUP
ERIE, PENNSYLVANIA

DESCRIPTION: B/H CLAMP/EJECTOR RAILS
24 CAVITY GENGHIS PLUG MOLD (50553)

SCALE	ECN NUMBER	CUSTOMER
FULL	5003762	44000008

SIZE	DRAWING NO.	REV.
E	1973A.006-007	C