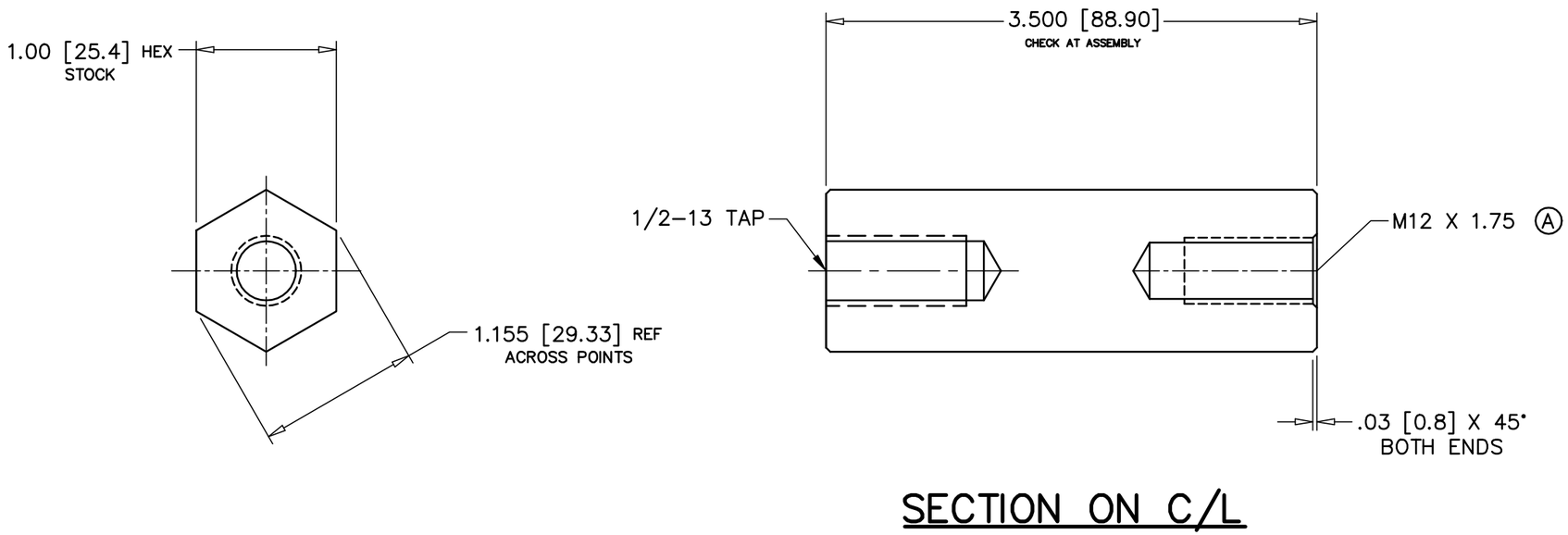

NOTE:

1.) BRACKETED DIMENSION ARE IN MM

METEOR

REV.	ECN	DATE	REVISION RECORD	DRN	APPR
A	5003978	05/10/07	M12 X 1.75 WAS 1/2–13 BOTH ENDS	MSO	MSO

TOLERANCES UNLESS NOTED

DIMENSIONS IN INCHES
2 PLACE DECIMAL +/– .01
3 PLACE DECIMAL +/– .001
4 PLACE DECIMAL +/– .0005

DIMENSIONS IN MILLIMETERS
0 PLACE DECIMAL +/– 0.3
1 PLACE DECIMAL +/– 0.25
2 PLACE DECIMAL +/– 0.025
3 PLACE DECIMAL +/– 0.013
ANGULAR: +/– 0° 15'

THE INFORMATION ON THIS DRAWING IS PROPRIETARY TO THE PLASTEK GROUP. THIS INFORMATION SHALL NOT BE DISCLOSED OR REPRODUCED WITHOUT PRIOR WRITTEN CONSENT OF THE PLASTEK GROUP.

DO NOT SCALE DRAWING

APPROVALS	
DRN. M. ST. ONGE	DATE 04/20/07
CHK'D C. VARKEY	DATE 04/20/07
APPROVED C. VARKEY	DATE 04/20/07
APPROVED	DATE
REFERENCE	
MATERIAL HEX STOCK	
HDN / FINISH	QTY REQ'D 2

THE PLASTEK GROUP
ERIE, PENNSYLVANIA

DESCRIPTION
K.O. EXTENSION (USA PRESS)
12 CAVITY "GENGHIS" CAP (50700)

SCALE	ECN NUMBER	CUSTOMER
FULL	5003978	44000008

SIZE	DRAWING NO.	REV.
B	1981B.027	A