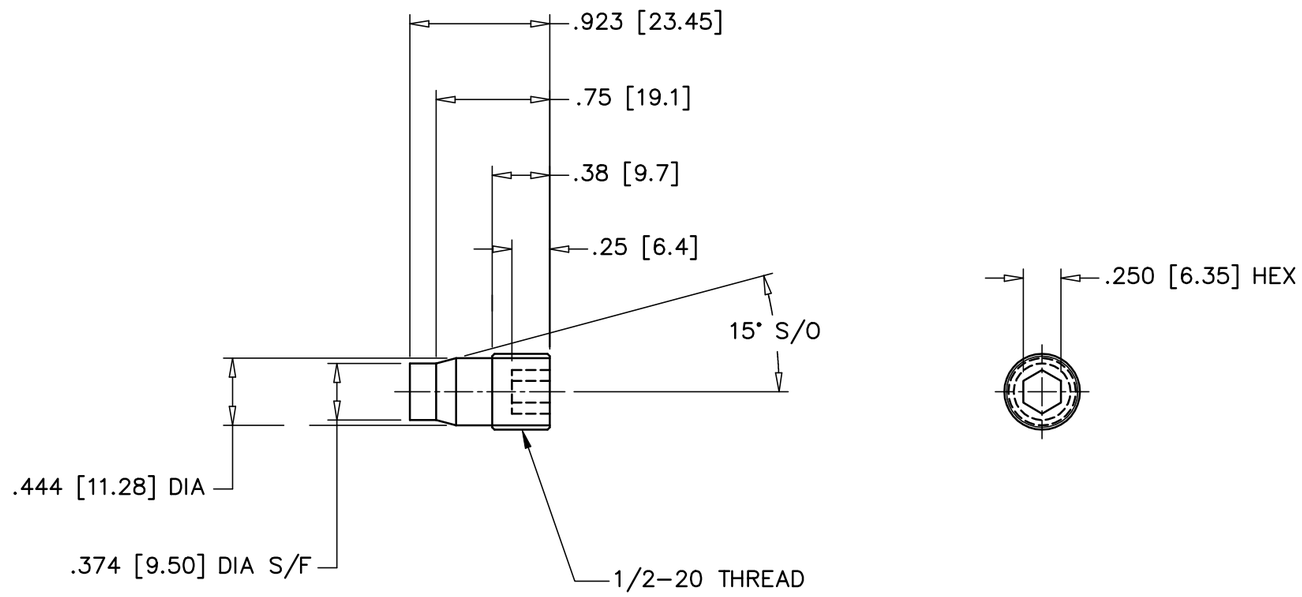

NOTE:

1.) BRACKETED DIMENSION ARE IN MM

METEOR

REV.	ECN	DATE	REVISION RECORD	DRN	APPR
A	5003908	03/31/07	ADDED DUAL DIMENSIONS	BFR	CV

TOLERANCES UNLESS NOTED

DIMENSIONS IN INCHES
2 PLACE DECIMAL +/- .01
3 PLACE DECIMAL +/- .001
4 PLACE DECIMAL +/- .0005

DIMENSIONS IN MILLIMETERS
0 PLACE DECIMAL +/- 0.3
1 PLACE DECIMAL +/- 0.25
2 PLACE DECIMAL +/- 0.025
3 PLACE DECIMAL +/- 0.013
ANGULAR: +/- 0° 15'

THE INFORMATION ON THIS DRAWING IS PROPRIETARY TO THE PLASTEK GROUP. THIS INFORMATION SHALL NOT BE DISCLOSED OR REPRODUCED WITHOUT PRIOR WRITTEN CONSENT OF THE PLASTEK GROUP.

DO NOT SCALE DRAWING

APPROVALS

DRN. B. RUTLEDGE	DATE 12/22/06
CHK'D T. SCHULTZ	DATE 01/05/07
APPROVED C. VARKEY	DATE 01/05/07
APPROVED	DATE

REFERENCE

MATERIAL
420 SS THREADED ROD

HDN / FINISH | QTY REQ'D (16) REQ'D

THE PLASTEK GROUP
ERIE, PENNSYLVANIA

DESCRIPTION
MANIFOLD PLUG
(2X24) CAV GENGHIS BARREL (50701)

SCALE	ECN NUMBER	CUSTOMER
FULL	5003691	44000008

SIZE	DRAWING NO.	REV.
B	1985A.058	A