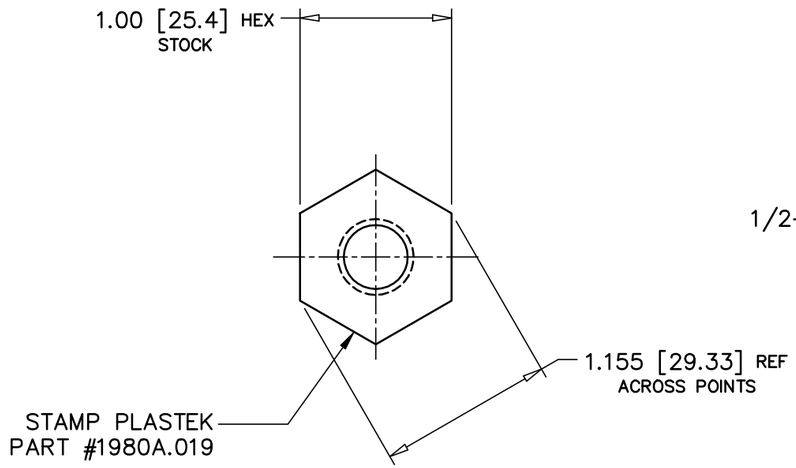

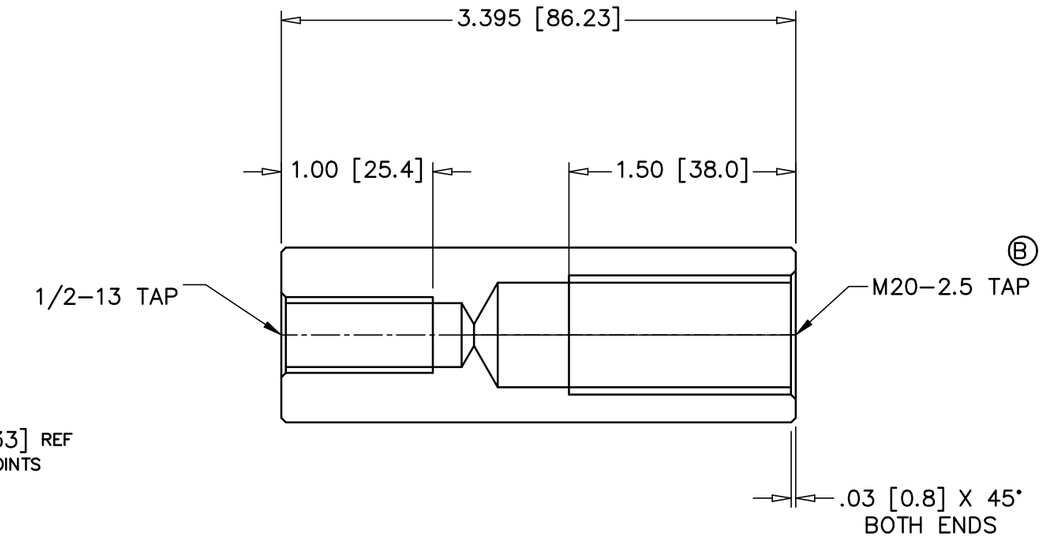

SECTION ON C/L

NOTE:

1.) BRACKETED DIMENSION ARE IN MM

METEOR

REV.	ECN	DATE	REVISION RECORD	DRN	APPR
B	5003977	04/18/07	M20 WAS M12	MSO	MSO
A	5003850	03/15/07	ADDED DUAL DIMENSIONS	BFR	CV

TOLERANCES UNLESS NOTED

DIMENSIONS IN INCHES
2 PLACE DECIMAL +/- .01
3 PLACE DECIMAL +/- .001
4 PLACE DECIMAL +/- .0005

DIMENSIONS IN MILLIMETERS
0 PLACE DECIMAL +/- 0.3
1 PLACE DECIMAL +/- 0.25
2 PLACE DECIMAL +/- 0.025
3 PLACE DECIMAL +/- 0.013
ANGULAR: +/- 0° 15'

THE INFORMATION ON THIS DRAWING IS PROPRIETARY TO THE PLASTEK GROUP. THIS INFORMATION SHALL NOT BE DISCLOSED OR REPRODUCED WITHOUT PRIOR WRITTEN CONSENT OF THE PLASTEK GROUP.

DO NOT SCALE DRAWING

APPROVALS	
DRN. S. Schaefer	DATE 12/28/06
CHK'D S. Schaefer	DATE 12/28/06
APPROVED	DATE
APPROVED	DATE
REFERENCE	
MATERIAL 1.00 HEX STOCK	
HDN / FINISH	QTY REQ'D 4

THE PLASTEK GROUP
ERIE, PENNSYLVANIA

DESCRIPTION
KNOCKOUT EXTENSION
48 CAVITY GENGHIS FACTORY SEAL (50704)

SCALE	ECN NUMBER	CUSTOMER
FULL	5003731	44000008

SIZE	DRAWING NO.	REV.
B	1980A.019	B