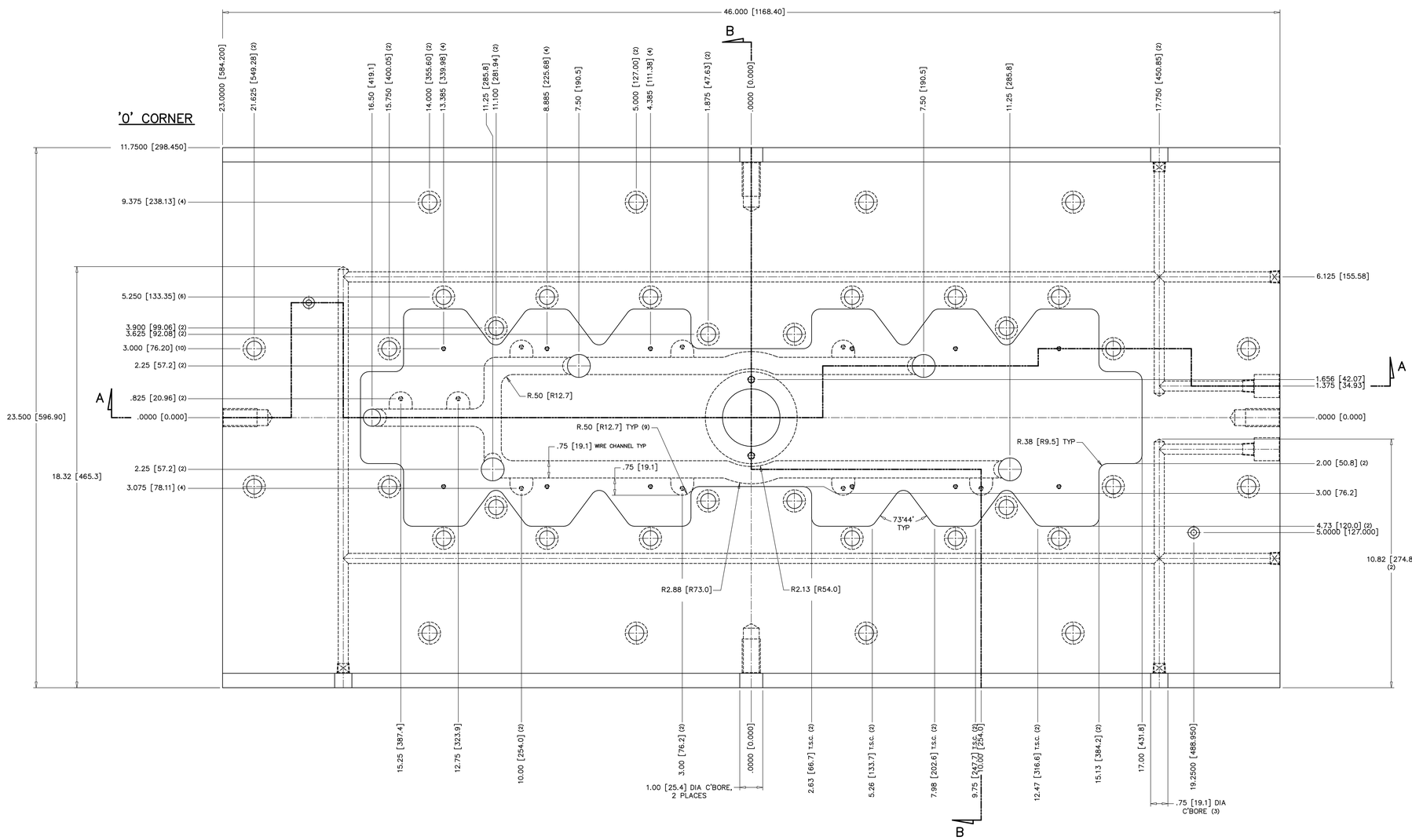

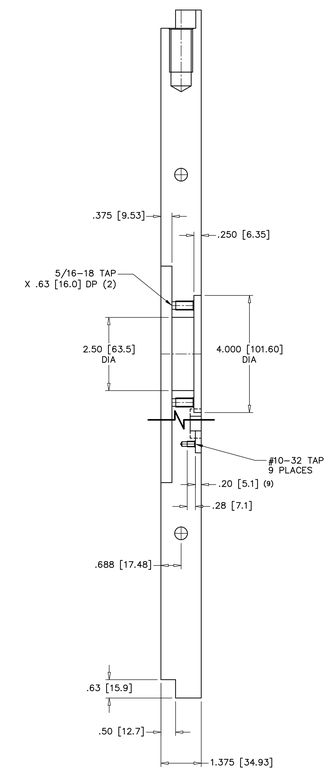

SECTION B–B

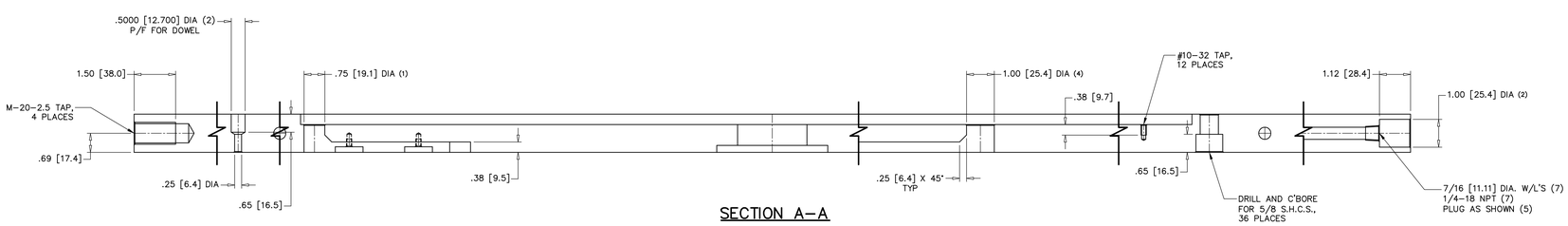

SECTION A–A

NOTE:

1.) BRACKETED DIMENSION ARE IN MM

METEOR

REV.	ECN	DATE	REVISION RECORD	DRN	APPR
A	5003915	03/31/07	ADDED DUAL DIMENSIONS	TS	CV

TOLERANCES UNLESS NOTED
DIMENSIONS IN INCHES
2 PLACE DECIMAL +/- .01
3 PLACE DECIMAL +/- .001
4 PLACE DECIMAL +/- .0005
DIMENSIONS IN MILLIMETERS
0 PLACE DECIMAL +/- 0.3
1 PLACE DECIMAL +/- 0.25
2 PLACE DECIMAL +/- 0.025
3 PLACE DECIMAL +/- 0.013
ANGULAR: +/- 0° 15'

THE INFORMATION ON THIS DRAWING IS PROPRIETARY TO THE PLASTEK GROUP. THIS DRAWING SHALL NOT BE DISCLOSED OR REPRODUCED WITHOUT PRIOR WRITTEN CONSENT OF THE PLASTEK GROUP.

DO NOT SCALE DRAWING

APPROVALS

DRN.	D. Rohan	02/21/07
CHK'D.	D. Rohan	02/23/07
APPROVED	C. VARKEY	02/23/07
APPROVED		DATE

REFERENCE

MATERIAL
420 S.S. (RAMAX)

HDN. / FINISH
PREHARD

QTY REQ'D
1

THE PLASTEK GROUP
ERIE, PENNSYLVANIA

DESCRIPTION
TOP CLAMP PLATE
12 CAV "GENGHIS" METEOR BARREL (50701)

SCALE	ECN NUMBER	CUSTOMER
.50 = 1.00	5003690	44000008

SIZE	DRAWING NO.	REV.
E	1984A.001	A