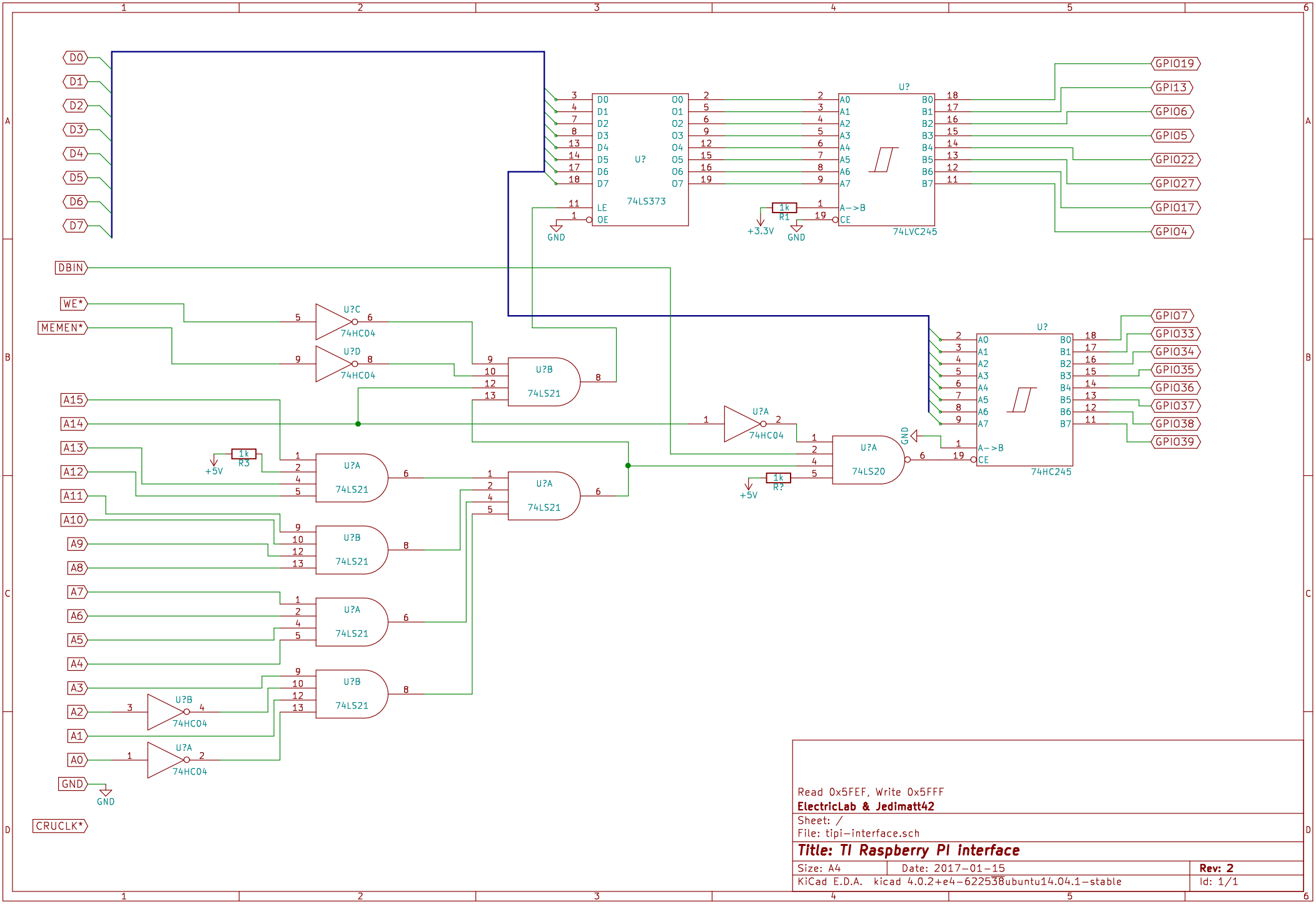

Read 0x5FEF, Write 0x5FFF

ElectricLab & Jedimatt42

Sheet: /

File: tipi-interface.sch

Title: TI Raspberry PI Interface

Size: A4	Date: 2017-01-15	**Rev: 2**
KiCad E.D.A. kicad 4.0.2+e4-622538ubuntu14.04.1-stable		Id: 1/1