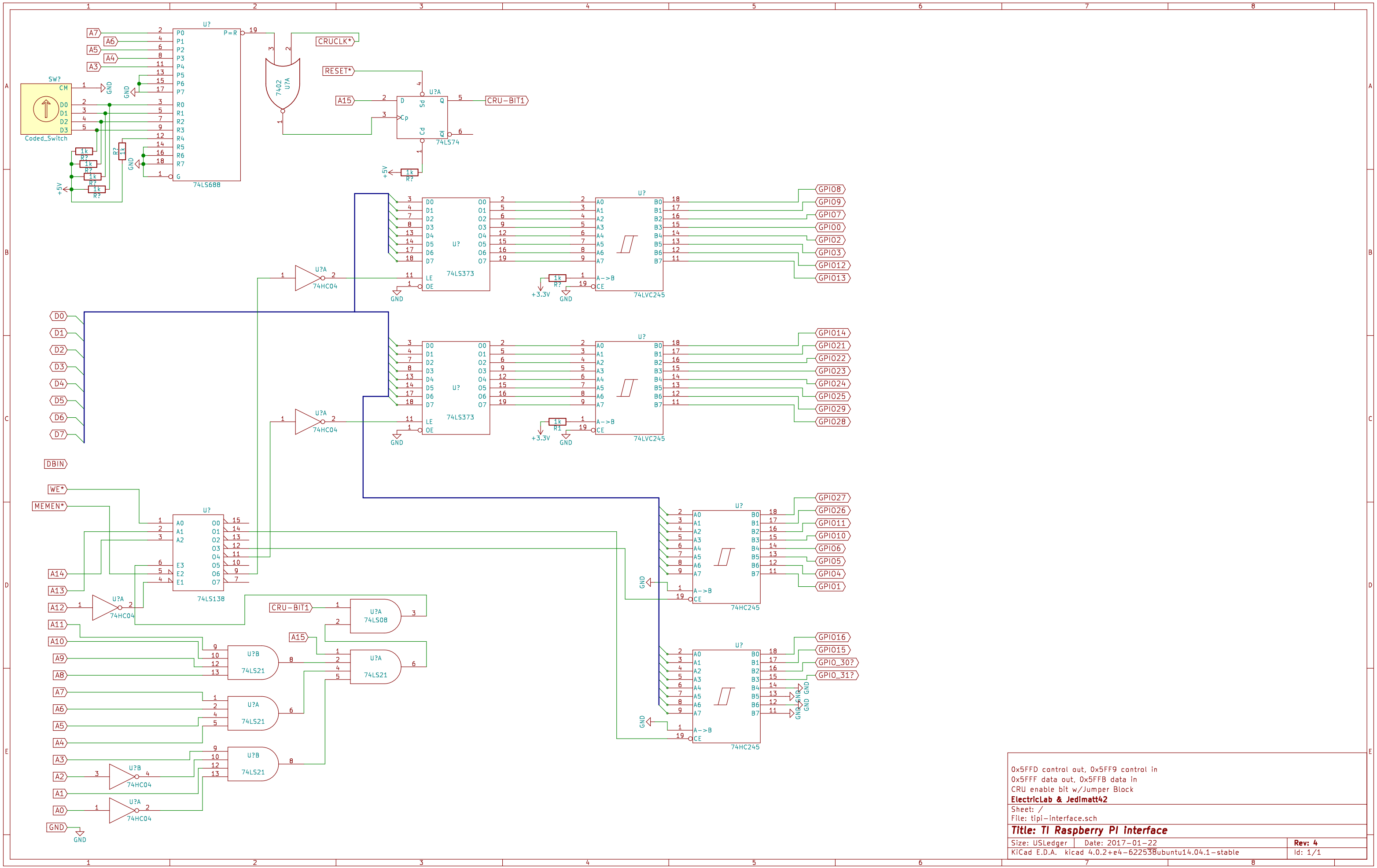

0x5FFD control out, 0x5FF9 control in
0x5FFF data out, 0x5FFB data in
CRU enable bit w/Jumper Block

ElectricLab & Jedimatt42

Sheet: /
File: tipi-interface.sch

Title: TI Raspberry PI interface

Size: USLedger	Date: 2017-01-22	Rev: 4
KiCad E.D.A. kicad 4.0.2+e4-622538ubuntu14.04.1-stable		Id: 1/1