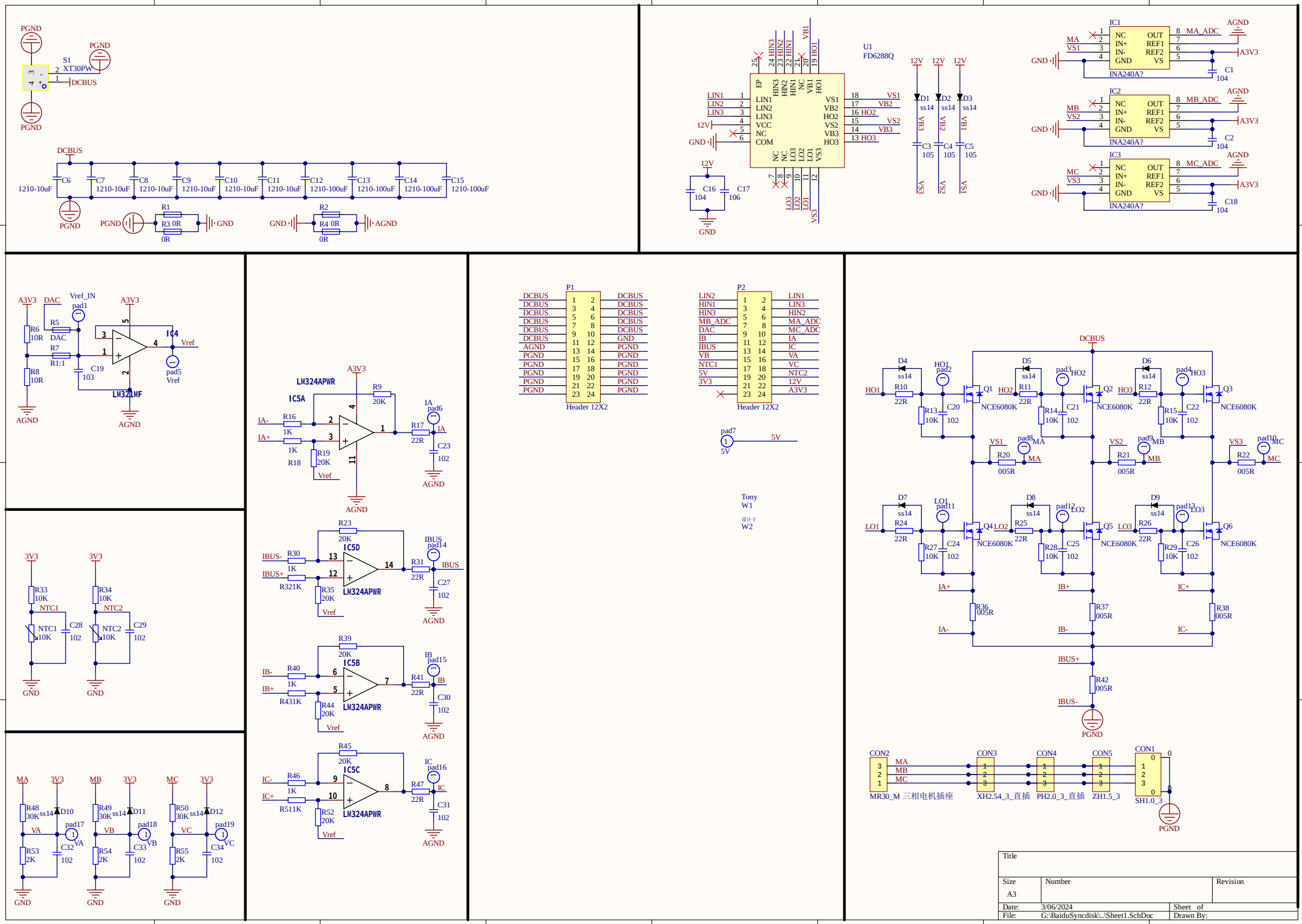
PGND
S1
XT30PW
DCBUS
C6
C7
C8
C9
C10
C11
C12
C13
C14
C15
1210-10uF
1210-100uF
R1
R3 0R
0R
GND
R2
R4 0R
AGND
U1
FD6288Q
LIN1
LIN2
LIN3
12V
VCC
COM
EP
HIN3
HIN2
HIN1
NC
VB1
HO1
VS1
VB2
HO2
VS2
VB3
HO3
LO3
LO2
LO1
VS3
C16
C17
104
106
D1
D2
D3
ss14
C3
C4
C5
105
IC1
IC2
IC3
INA240A?
MA
MB
MC
VS1
VS2
VS3
MA_ADC
MB_ADC
MC_ADC
A3V3
C1
C2
C18
DAC
Vref_IN
pad1
R5
R6
10R
R7
R1:1
R8
IC4
Vref
pad5
C19
103
LM324MF
IC5A
LM324APWR
R9
20K
IA
pad6
IA-
IA+
R16
1K
R17
22R
C23
102
R18
R19
IC5D
IBUS
pad14
IBUS-
IBUS+
R30
R321K
R31
C27
R35
IC5B
IB
pad15
IB-
IB+
R40
R431K
R41
C30
R44
IC5C
IC
pad16
IC-
IC+
R46
R511K
R47
C31
R52
3V3
R33
10K
NTC1
C28
R34
NTC2
C29
R48
30K
D10
pad17
VA
R53
2K
C32
R49
D11
pad18
VB
R54
C33
R50
D12
pad19
VC
R55
C34
P1
Header 12X2
P2
LIN2
HIN1
HIN3
MB_ADC
DAC
IB
IBUS
VB
NTC1
5V
3V3
MC_ADC
IA
IC
VA
VC
NTC2
12V
A3V3
pad7
5V
Tony
W1
设计于
W2
DCBUS
D4
HO1
pad2
R10
22R
Q1
NCE6080K
R13
C20
102
D5
pad3
R11
Q2
R14
C21
D6
pad4
R12
Q3
R15
C22
VS1
pad8
MA
R20
005R
VS2
pad9
MB
R21
VS3
pad10
MC
R22
D7
LO1
pad11
R24
Q4
LO2
R27
C24
D8
pad12
R25
Q5
R28
C25
D9
pad13
LO3
R26
Q6
R29
C26
IA+
IA-
IB+
IB-
IC+
IC-
R36
R37
R38
IBUS+
IBUS-
R42
CON2
CON3
CON4
CON5
CON1
MR30_M 三相电机插座
XH2.54_3_直插
PH2.0_3_直插
ZH1.5_3
SH1.0_3
Title
Size
A3
Number
Revision
Date:
3/06/2024
Sheet of
File:
G:\BaiduSyncdisk\..\Sheet1.SchDoc
Drawn By:

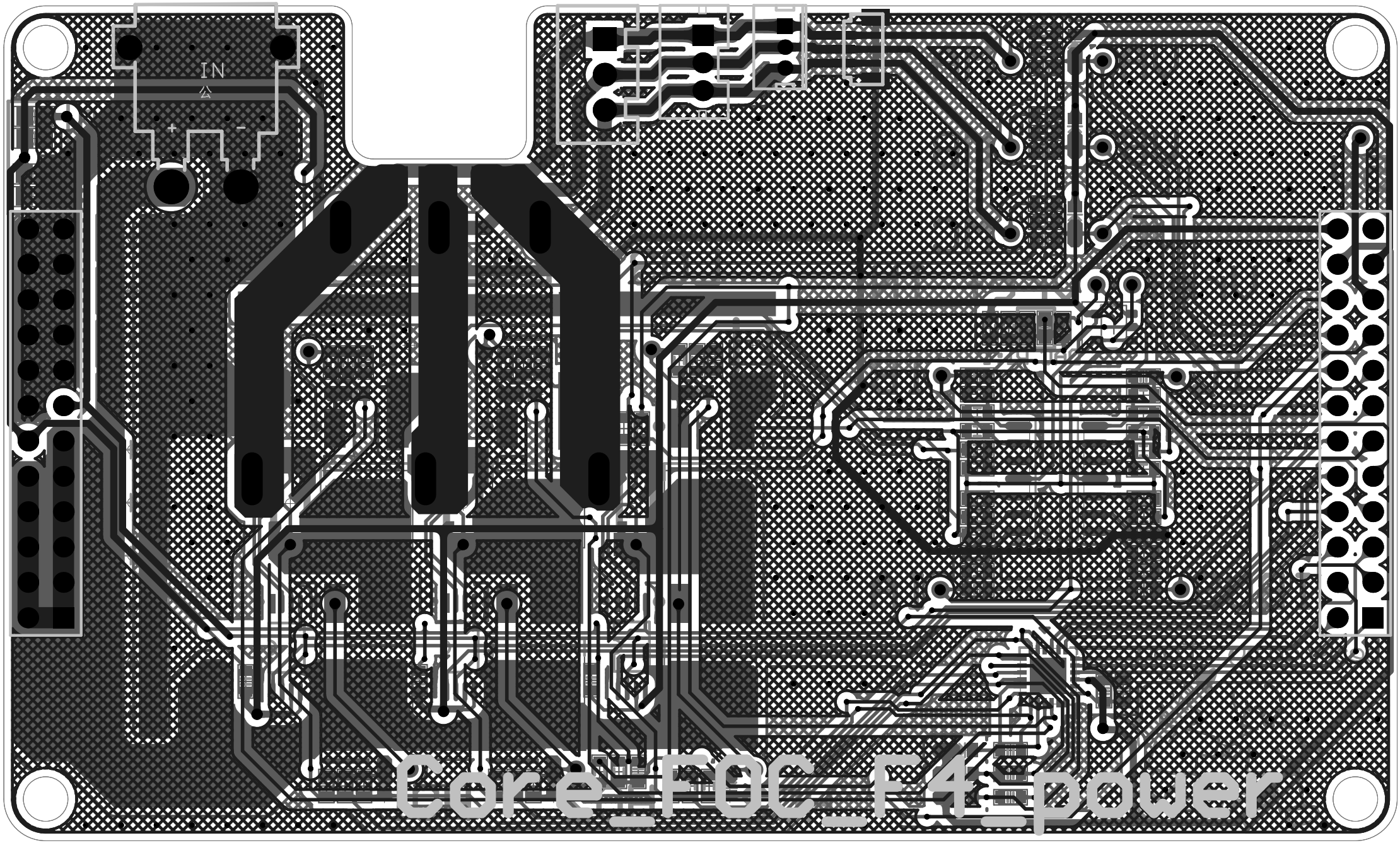
IN
+
-
Core_FOC_F4_power

Board Stack Report