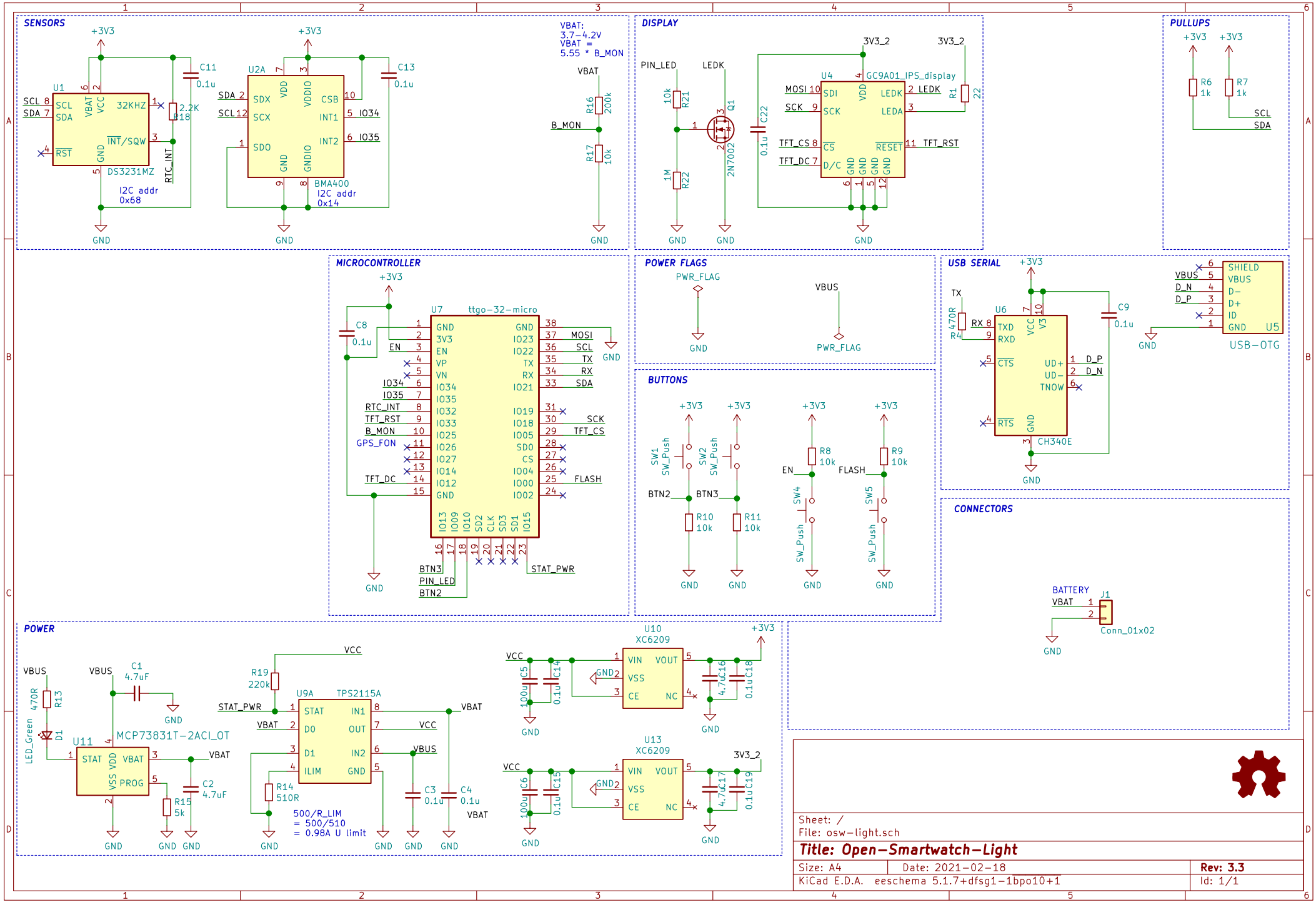

Sheet: /
File: osw-light.sch

Title: Open-Smartwatch-Light

Size: A4	Date: 2021-02-18	Rev: 3.3
KiCad E.D.A. eeschema 5.1.7+dfsg1-1bpo10+1		Id: 1/1