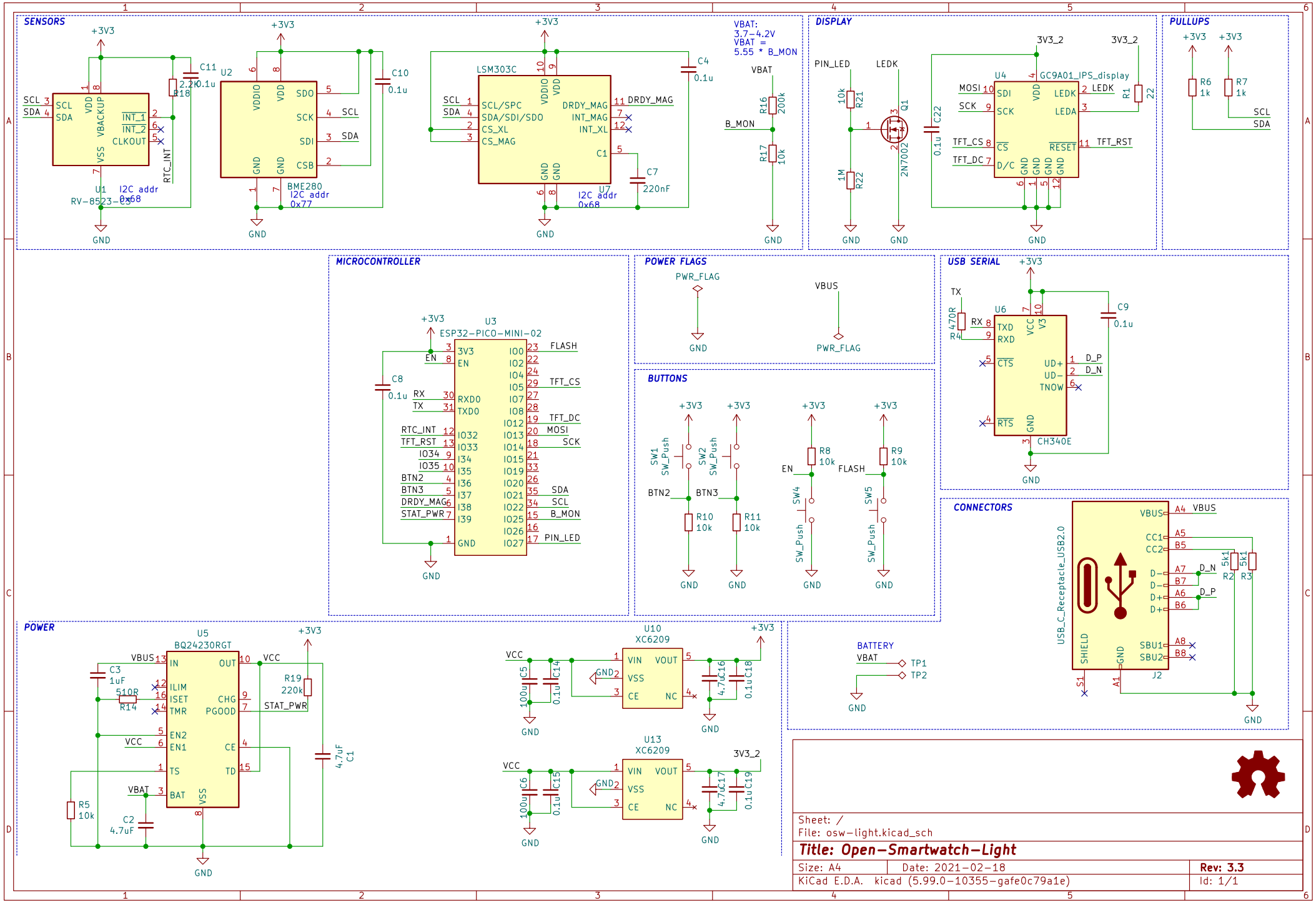
SENSORS
U1
RV-8523-C3
I2C addr 0x68
U2
BME280
I2C addr 0x77
U7
LSM303C
I2C addr 0x68
VBAT:
3.7-4.2V
VBAT =
5.55 * B_MON
DISPLAY
U4
GC9A01_IPS_display
Q1
2N7002
PULLUPS
MICROCONTROLLER
U3
ESP32-PICO-MINI-02
POWER FLAGS
PWR_FLAG
VBUS
BUTTONS
SW1 SW_Push
SW2 SW_Push
SW4 SW_Push
SW5 SW_Push
USB SERIAL
U6
CH340E
CONNECTORS
USB_C_Receptacle_USB2.0
J2
POWER
U5
BQ24230RGT
U10
XC6209
U13
XC6209
BATTERY
VBAT
TP1
TP2
Sheet: /
File: osw-light.kicad_sch
Title: Open-Smartwatch-Light
Size: A4
Date: 2021-02-18
Rev: 3.3
KiCad E.D.A. kicad (5.99.0-10355-gafe0c79a1e)
Id: 1/1