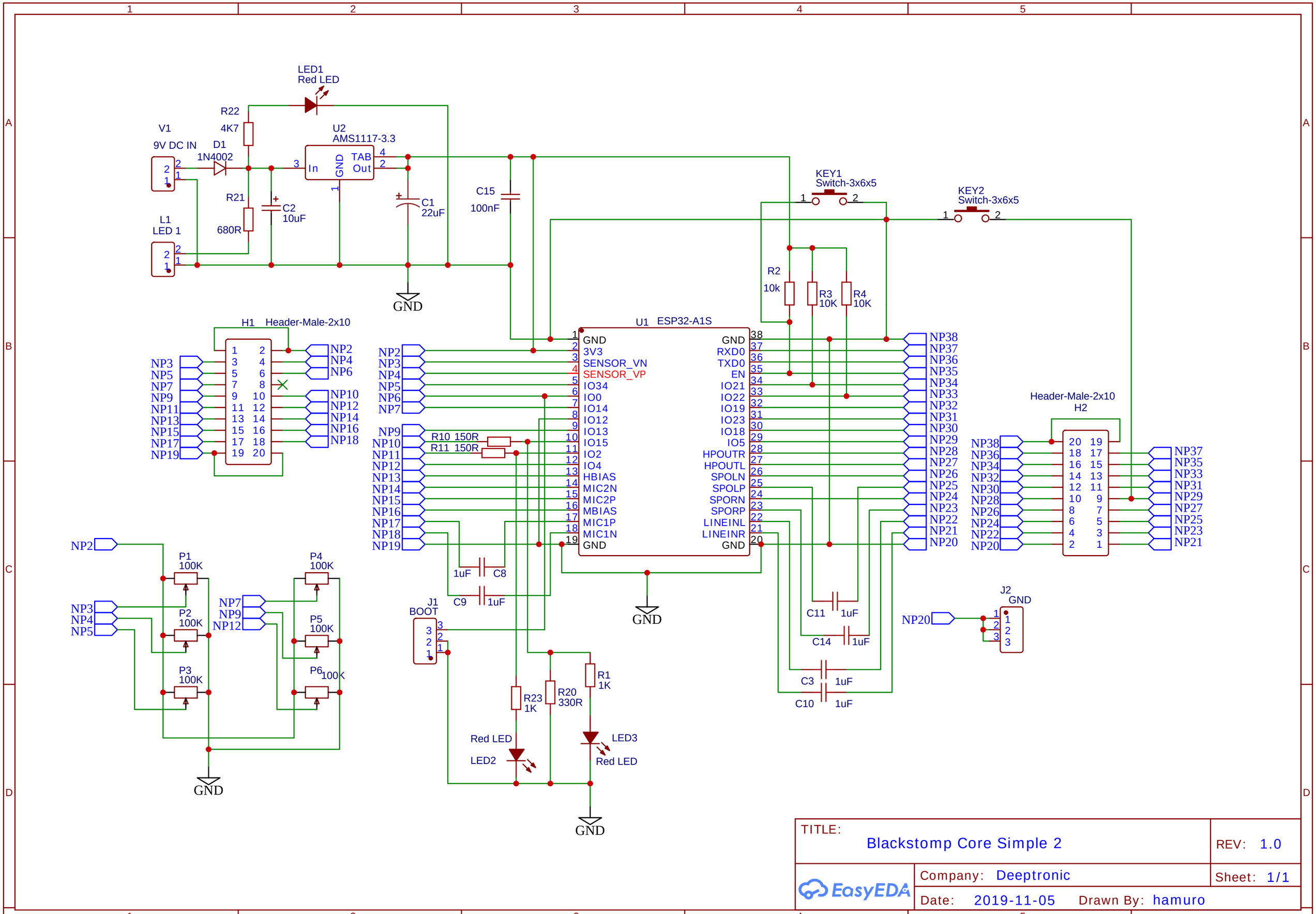

TITLE: Blackstomp Core Simple 2	REV: 1.0
EasyEDA	Company: Deeptronic
	Sheet: 1/1
	Date: 2019-11-05 Drawn By: hamuro