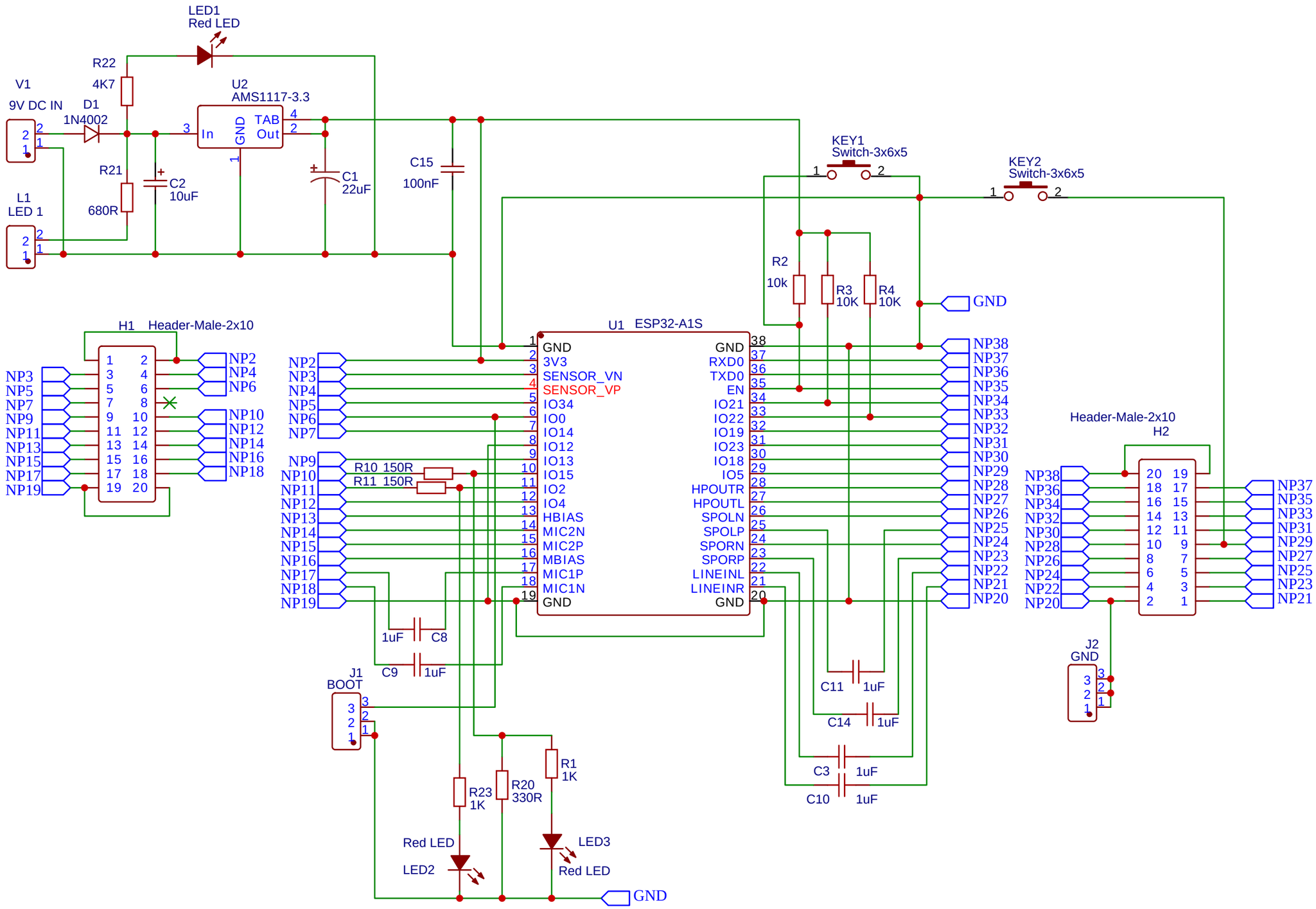

TITLE: Blackstomp Core Simple 1	REV: 1.0
Company: Deeptronic	Sheet: 1/1
Date: 2019-11-05 Drawn By: hamuro	