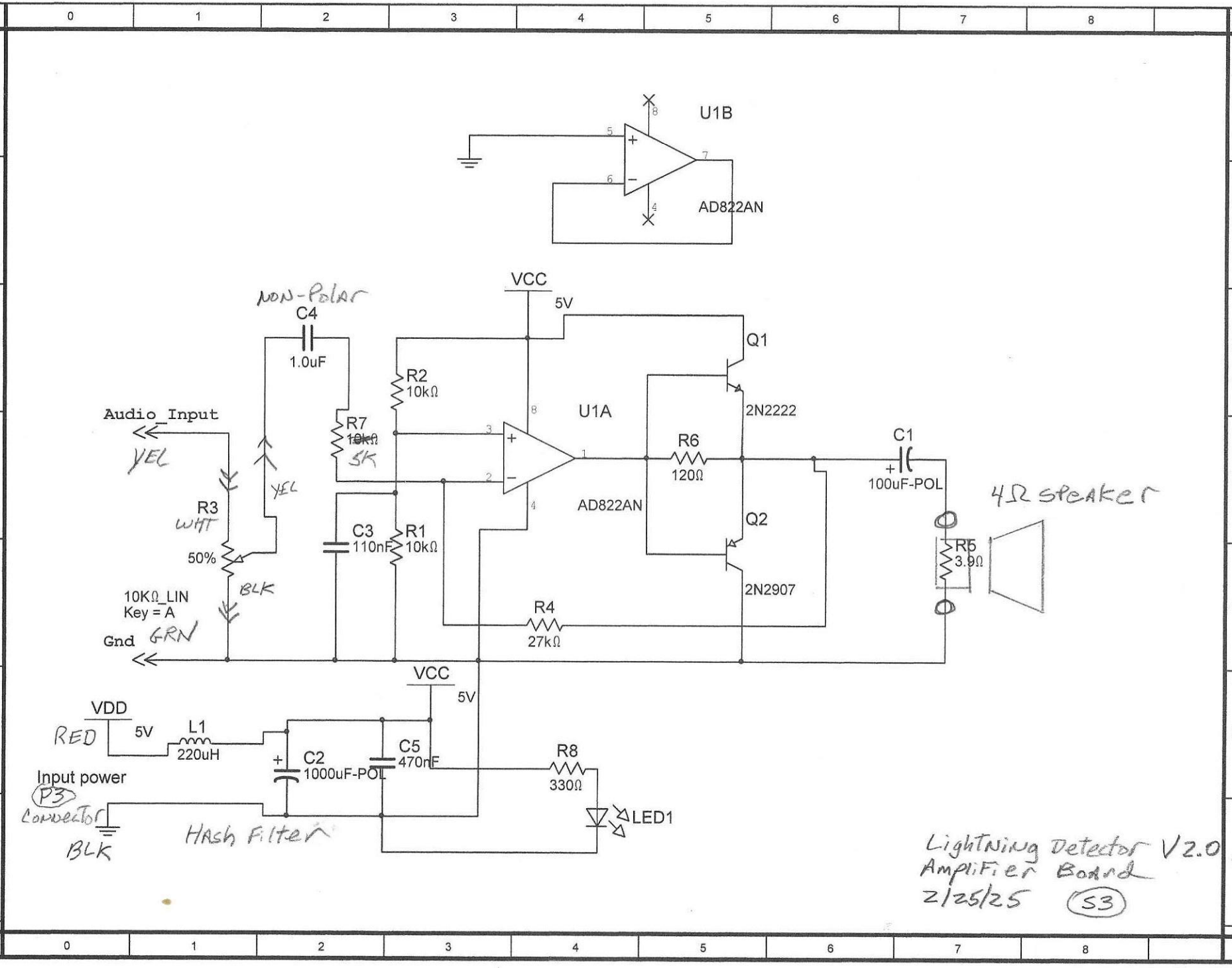
U1B
AD822AN
VCC
5V
NON-Polar
C4
1.0uF
R2
10kΩ
R7
~~10kΩ~~
5K
Audio_Input
YEL
YEL
R3
WHT
50%
BLK
10KΩ_LIN
Key = A
Gnd
GRN
C3
110nF
R1
10kΩ
U1A
AD822AN
Q1
2N2222
R6
120Ω
Q2
2N2907
R4
27kΩ
C1
100uF-POL
R5
3.9Ω
4Ω speaker
VCC
5V
VDD
RED
5V
L1
220uH
C2
1000uF-POL
C5
470nF
R8
330Ω
LED1
Input power
P3
Connector
BLK
Hash Filter
Lightning Detector V2.0
Amplifier Board
2/25/25
S3