École Nationale Supérieure des Mines de Saint-Étienne

Design of a Variable Distance Digital Code Lock

Authors:

Alice FRANCÉ

Paul GUILLEMIN

Gevorg ISHKHANYAN

Date: September 15, 2024

Contents

1 Introduction **2**

1.1 Problem and Objectives . . . 2

1.2 Methods and Technical Solutions Adopted . . . 2

2 General Project Overview **4**

2.1 Capacitive Sensors . . . 4

2.2 Need for a Conditioner . . . 5

2.3 Conditioner Operation . . . 5

2.4 Multi-Position Digital Code Lock System . . . 6

3 Capacitive Sensor Design **6**

3.1 Operating Principle . . . 6

3.2 Conditioner Design . . . 9

3.2.1 Constant Current Capacitor Charging . . . 9

3.2.2 Hysteresis Comparator . . . 11

3.2.3 Closed-Loop Circuit Simulation . . . 12

3.3 PCB Design with KiCAD . . . 13

3.4 Tests and Measurements . . . 16

4 Signal Acquisition with an STM32 Microcontroller **17**

4.1 Overall Code Architecture for Acquisition . . . 17

4.2 Technical Details of Signal Acquisition . . . 19

5 Project Finalization **20**

5.1 System Tests and Measurements . . . 20

5.2 Final Manufacturing . . . 22

6 Conclusion and Improvement Prospects **22**

7 Appendices **23**

7.1 Capacitor Code for PartQuest Simulation . . . 23

7.2 STM32 Code . . . 24

7.3 Demonstrations . . . 25

Abstract

This document presents the design of a digital code system using capacitive sensors. There are 3 sensors, and each of them is sensitive to 2 positions: near or far from the sensor. We will first define the project context through the objectives we set. Then, we will study the design of the system and the

subsystems that make up the project. Finally, we will conclude on the relevance of such a system and its limitations.

1 Introduction

Since its invention in the 1960s, the digital code lock has revolutionized the way we secure our spaces and belongings. Initially designed to replace physical keys with access codes, this system quickly gained popularity thanks to its simplicity and effectiveness. However, with the evolution of technology, traditional digital code locks now exhibit certain limitations, such as vulnerability to code theft through wear marks on the buttons or the potential transmission of diseases through the use of physical buttons. In this context, our proximity-based digital code lock system, with multiple positions, addresses some of these issues. Our authentication device offers a more secure alternative with more complex combinations, is intuitive, and contactless. By using multiple electrodes and detecting the distance of the user's finger, our digital code lock allows for creating more complex combinations, making code theft more difficult.

1.1 Problem and Objectives

The evolution of technologies and security needs has highlighted certain limitations of traditional digital code locks. These devices, although widely adopted, have vulnerabilities such as access code theft, which can occur by observing wear marks left on the buttons. Additionally, repeated manipulation of buttons by multiple users raises hygiene issues, promoting the transmission of bacteria. Faced with these challenges, the project aims to design a proximity-based digital code lock system with multiple positions.

The specific objectives of the project are as follows:

- Improved Security: Using more complex combinations, made possible by detecting the distance between the finger and the sensor, makes access code theft more difficult. This approach adds a layer of security compared to traditional digital code locks.
- Hygiene: By eliminating the need for physical contact with the device, our digital code lock reduces the risk of disease transmission. This contactless system is particularly relevant in contexts where hygiene is a major concern.
- Intuitiveness and Ergonomics: Creating an intuitive user interface that allows for contactless use aims to make the device easier and more pleasant to use. Users can interact with the digital code lock in a natural and effortless way.

1.2 Methods and Technical Solutions Adopted

To achieve the set objectives, several methods and technical solutions have been implemented:

- Capacitive Sensors: The project uses capacitive sensors to detect the proximity and position of the user's finger. Each sensor can distinguish between two positions: near or far from the sensor.

- Conditioning Circuit: A conditioning circuit was designed to process and generate the electrode signal. This circuit includes a constant current charging circuit, which provides a stable current to the capacitor formed by the electrode and the user's hand. It also includes an oscillator with a hysteresis comparator, which detects the triggering threshold and enables closed-loop operation. This conditioner is essential for ensuring precise and reliable detection of finger positions.

- STM32 Microcontroller: The project integrates an STM32 microcontroller for signal acquisition and processing. This microcontroller converts capacitance variations into digital data and manages the various possible combinations of positions detected by the sensors. It is the core of the system, ensuring coordination of the digital code lock's functions.

- PCB Design with KiCAD: The schematic and routing of the printed circuit board (PCB) were done using the KiCAD software. This step integrates the various electronic components optimally on the PCB, facilitating the manufacturing and testing of the device. KiCAD offers a robust platform for designing and simulating electronic circuits.

- Programming and Testing: The development of the embedded software was a crucial step to ensure the proper functioning of the multi-position digital code lock system. Rigorous tests were carried out to measure performance and validate the robustness of the device.

2 General Project Overview

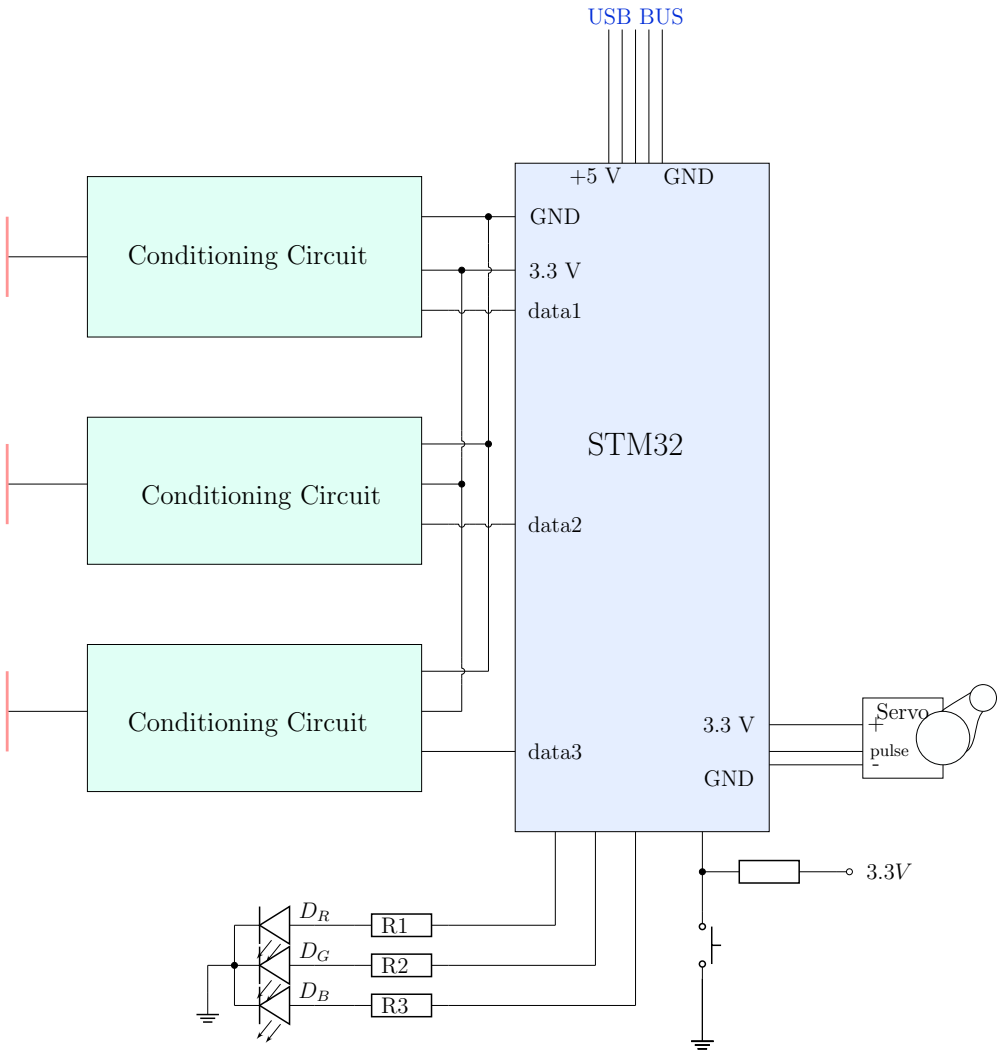

Figure 1: Complete circuit diagram

2.1 Capacitive Sensors

Capacitive sensors represent the central elements of the project. Their operating principle is based on measuring the electrical capacitance between an electrode and the user's hand. This capacitance varies depending on the distance between them, allowing for the detection of proximity and finger position without physical contact.

The goal is to create a variable-capacitance capacitor. In the theoretical model of an infinite planar capacitor, the capacitance C is expressed as follows:

$$C = \frac{\varepsilon_0 \varepsilon_r S}{d}$$

The demonstration of the formula is in section 7.3.

where:

- ε_0 is the permittivity of free space,
- ε_r is the relative permittivity of the material between the plates,
- S is the surface area of the plates,
- d is the distance between the plates.

Although our capacitors are not infinite, the approximation is accurate enough for the intended application.

In our application, although the infinite planar capacitor model is not strictly valid, it illustrates the inverse relationship between capacitance and the distance d between the electrode and the user's hand. Capacitance is also directly proportional to the electrode's surface area.

In practice, we use three electrodes to generate the different combinations of the digital code. A simulation under Comsol shows the distribution of the electric field lines when a hand is placed above the central electrode. The field lines of the adjacent electrodes bend toward the hand, influencing the capacitance measurement of the central electrode.

2.2 Need for a Conditioner

To exploit the capacitance variations measured by the capacitive sensors, a signal conditioner is necessary. This circuit must reliably process and generate the electrode signal.
Indeed, directly measuring capacitance is complicated. For example, one could use the resonance of an RLC circuit or a Sauty-Wien bridge. However, these methods are generally less precise, more challenging to calibrate, and more sensitive to ambient noise. The method of charging a capacitor with a constant current offers the best compromise for achieving the highest precision.

2.3 Conditioner Operation

The method for determining capacitance involves charging the capacitor with a constant current. The capacitance is then deduced from the time required to reach a certain voltage threshold. This approach requires a precise and stable circuit to ensure reliable measurements.
The design of the conditioner includes several key components:

- **Constant Current Charging Circuit**: This circuit charges the capacitor formed by the user's hand and the electrode with a constant current, allowing the capacitance to be determined based on the charging time.
- **Oscillator with Hysteresis Comparator**: Used to detect the triggering threshold and enable closed-loop operation.

2.4 Multi-Position Digital Code Lock System

Initially, each electrode is calibrated to measure a baseline capacitance in the absence of any conductive object nearby. Then, a detection threshold is defined to determine two different proximity zones for the hand relative to each sensor: near and far.

When a hand approaches the electrodes, the microcontroller detects the capacitance variations and evaluates the hand's distance. A combination of buttons and distances can be registered as an access code. For example, a button sequence could be:

"Sensor 2 near + Sensor 1 far then near + Sensor 3 far". The system then validates the code by comparing the user's entered combination with the previously recorded one. If the distances and sensor sequences match, access is granted.

3 Capacitive Sensor Design

First, we will study the general principle of the capacitive sensor's operation. Then, we will explore why it is necessary to have a conditioner to process and generate the electrode's signal. We will subsequently detail the design of such a conditioner and finally conduct tests and measurements of the conditioner circuit.

3.1 Operating Principle

The goal is to construct a variable-capacitance capacitor. In the infinite planar capacitor model (without edge effects), the capacitance is expressed as: $C = \frac{\varepsilon_0 \varepsilon_r S}{d}$. Although the infinite planar capacitor model is not valid here, it illustrates the capacitance variation based on the thickness d between the two plates (here the electrode and the user's hand): Capacitance is **inversely proportional to the distance between the plates**. Additionally, capacitance is **directly proportional to the surface area of the electrode.**

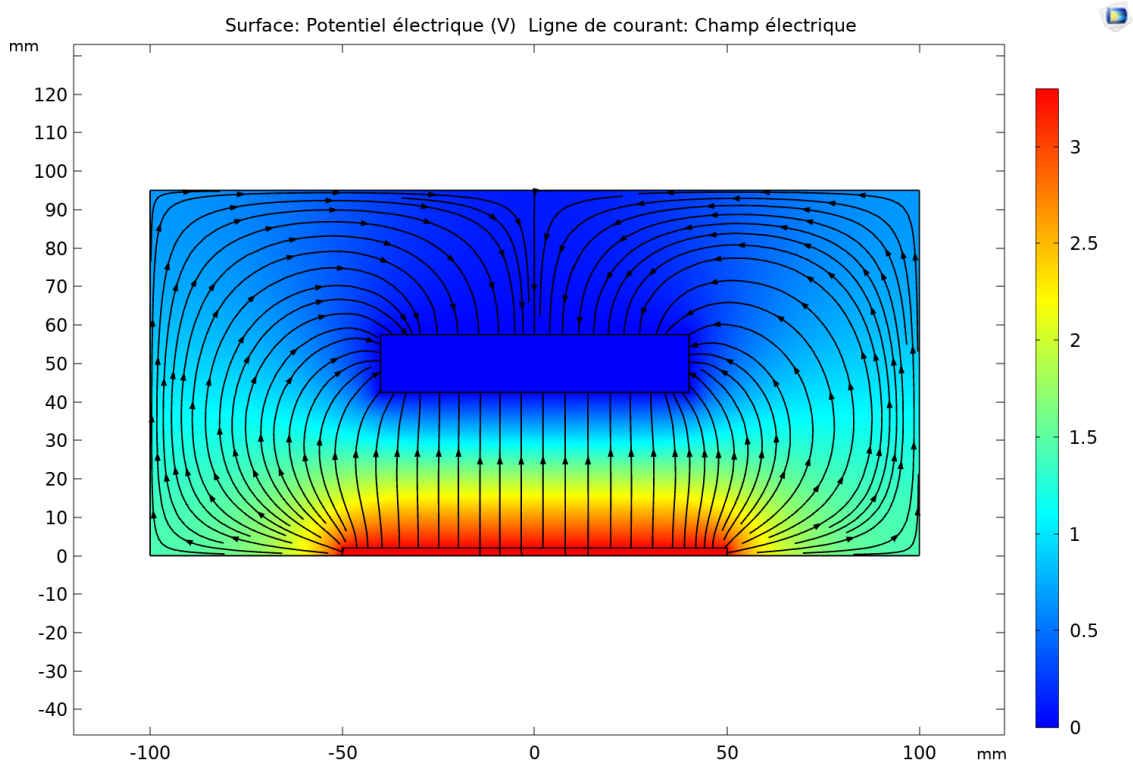

Figure 2: 2D Simulation under Comsol

In practice, we will use 3 electrodes for the combinations of the digital code. After simulation, placing the hand above the central electrode yields the following simulation:

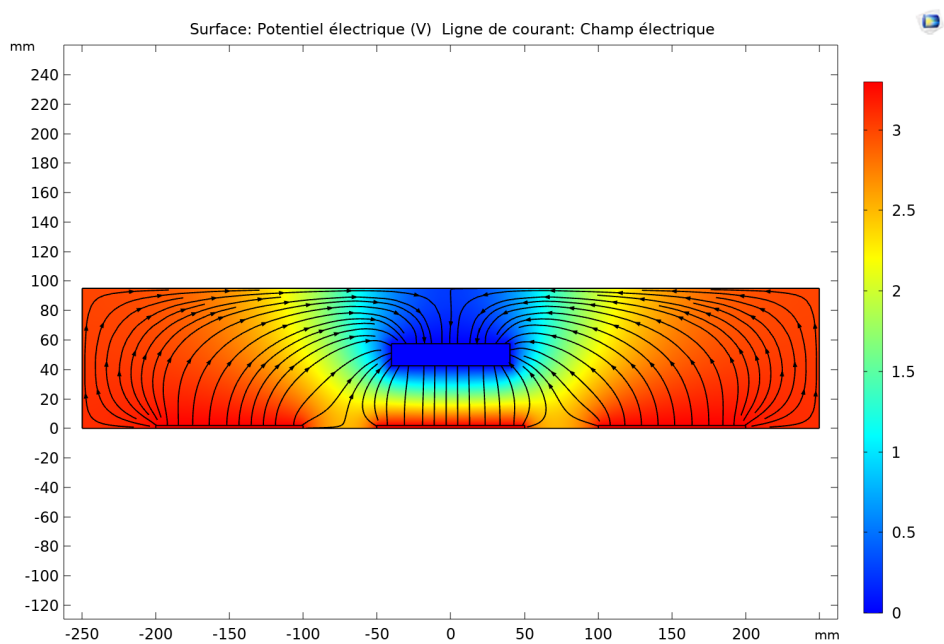

Figure 3: 2D Simulation under Comsol with 3 electrodes

Between the two simulations, we observe that the field lines of the electrodes placed on either side of the electrode whose capacitance we want to measure curve towards the hand. We aim to estimate the error caused by the presence of the other electrodes.

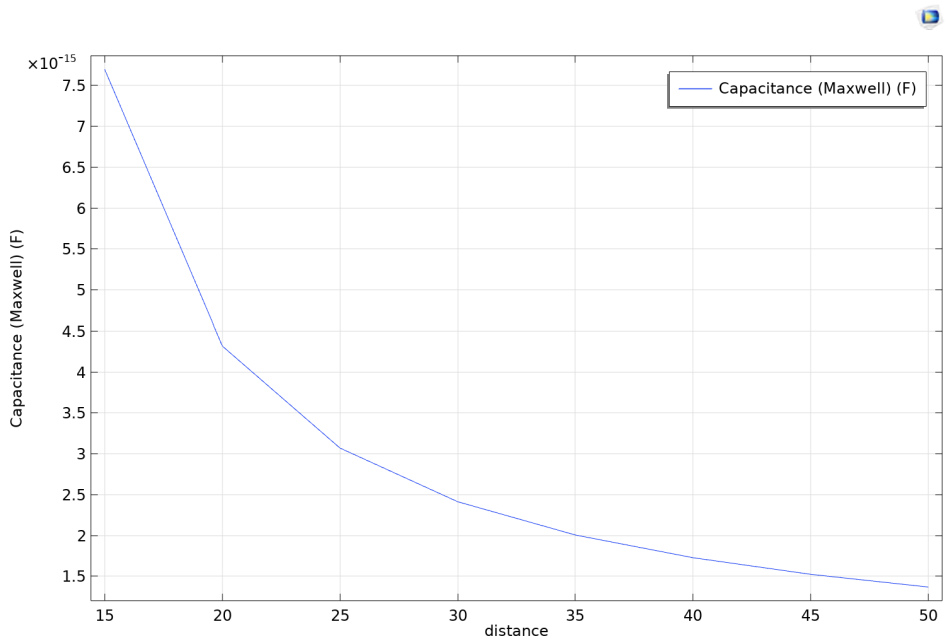

Figure 4: Capacitance evolution as a function of distance for 3 electrodes (in mm)

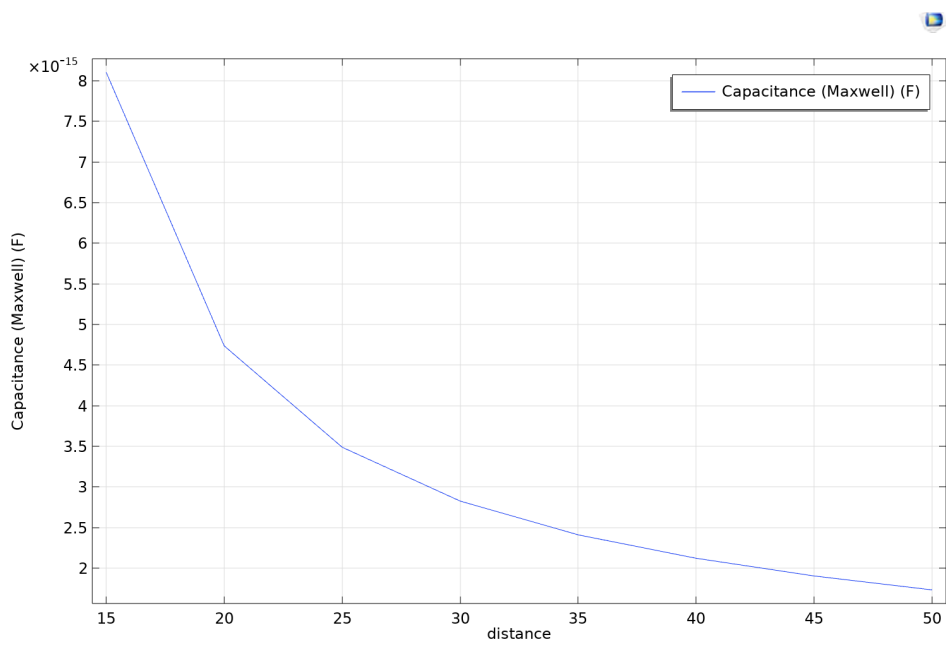

Figure 5: Capacitance evolution as a function of distance for 1 electrode (in mm)

The presence of the two other electrodes does not significantly disturb the system for determining the distance between the hand and the electrode.

3.2 Conditioner Design

The design of the conditioner is divided into several distinct parts:

- A circuit that charges the capacitor with a constant current.
- An oscillator with a hysteresis comparator.

The method for determining the capacitance involves charging a capacitor (here the capacitor is formed by the user's hand and the electrode connected to the conditioning circuit) with a constant current. The capacitance can thus be determined based on the charging time.

3.2.1 Constant Current Capacitor Charging

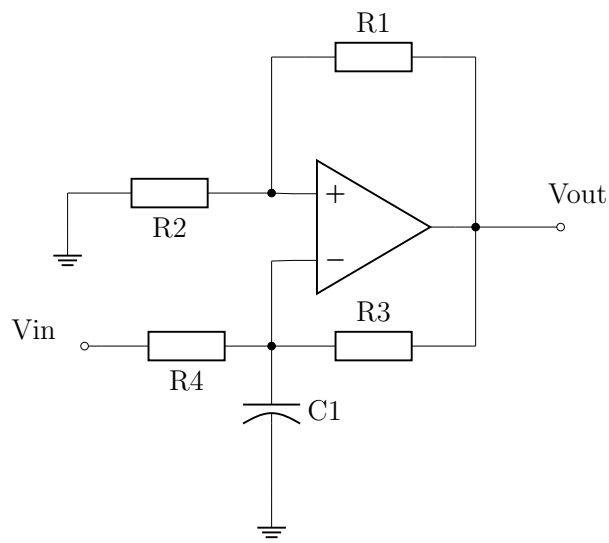

Figure 6: Constant current charging circuit (op-amp + and - terminals are inverted)

The circuit provides a constant current to the capacitance $C1$. The charging voltage then becomes a linear function, allowing the capacitance to be directly related to the oscillation frequency of the circuit, which depends on the charging time of the capacitor.

The current the capacitor receives is $i = \frac{Vin}{R_4}$

In PartQuest, we model the circuit that charges the capacitor with a constant current.

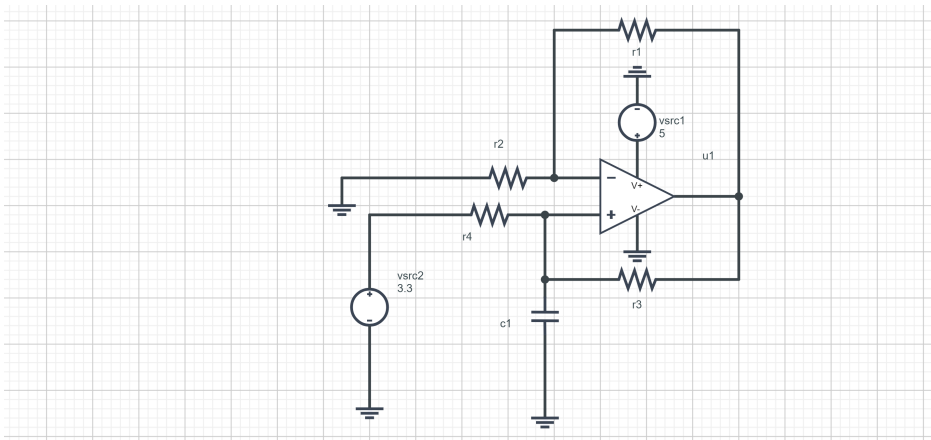

Figure 7: Constant current charging circuit in PartQuest

We set $R1 = R2 = 1MW$. Additionally, $R3 = R4 = nR1 = nR2$. Here we chose $n = 4$, so $R3 = R4 = 4MW$. We take $C1 = 10pF$. The op-amp is powered asymmetrically at 0V and 5V. Vin is set to 3.3 V.

We then obtain the following simulation:

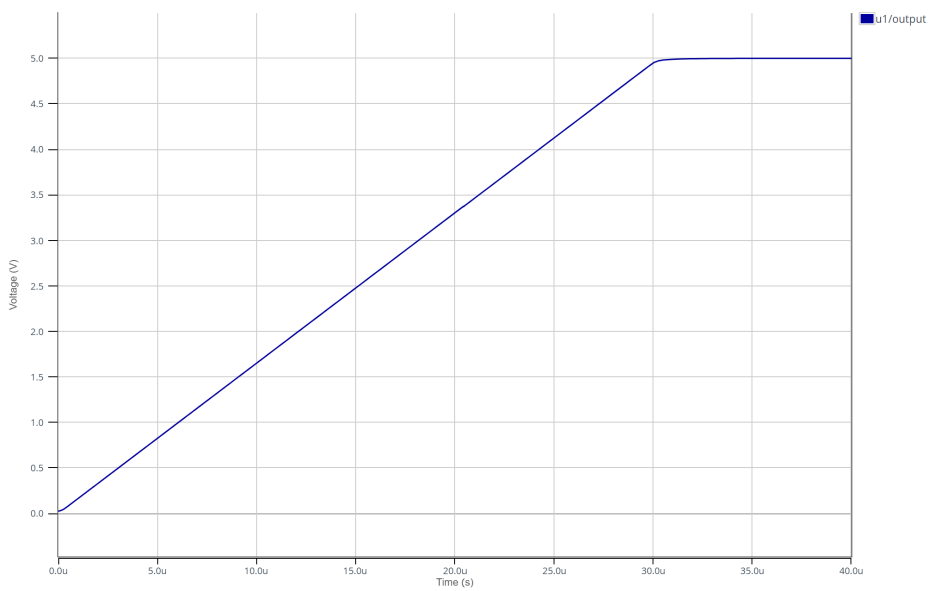

Figure 8: Capacitor charging with constant current in PartQuest

We observe a voltage saturation at 5V, corresponding to the op-amp's power supply. We also observe a linear capacitor charge.
The equation governing a capacitor's behavior is $i_C = C\frac{du_C}{dt}$. We measure a slope $\frac{du_C}{dt} = 1.6 \cdot 10^5$ V/s. Knowing that the charging current is $8.25e-7A$, we determine the capacitance $C1 = \frac{\frac{du_C}{dt}}{i_c} = \frac{1.6 \cdot 10^5}{8.25 \cdot 10^{-7}} = 5.5$ pF.

3.2.2 Hysteresis Comparator

Next, it is necessary to design the hysteresis comparator to detect the triggering threshold for closed-loop operation.

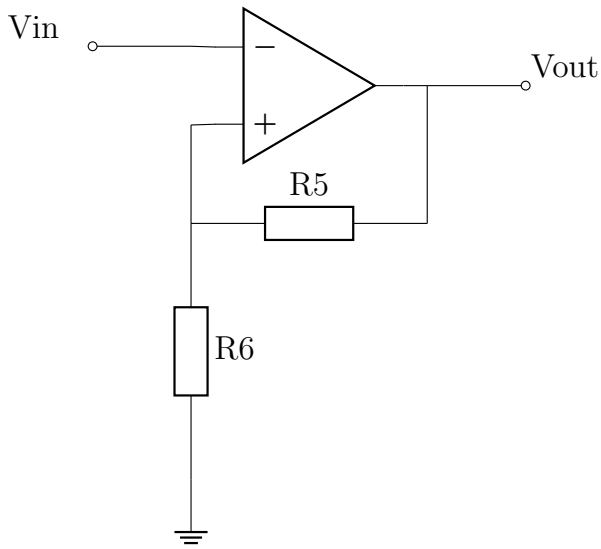

Figure 9: Hysteresis Comparator

$Vin_{l->h}$ and $Vin_{h->l}$ represent the thresholds for switching from 0 V to Vsat and from Vsat to 0 V, respectively. Here Vsat = 5V, corresponding to the op-amp's supply voltage.

We then show that $Vin_{h->l} = \frac{R_6}{R_5+R_6}Vsat$ and $Vin_{l->h} = 0$. The demonstrations are in section 7.3.

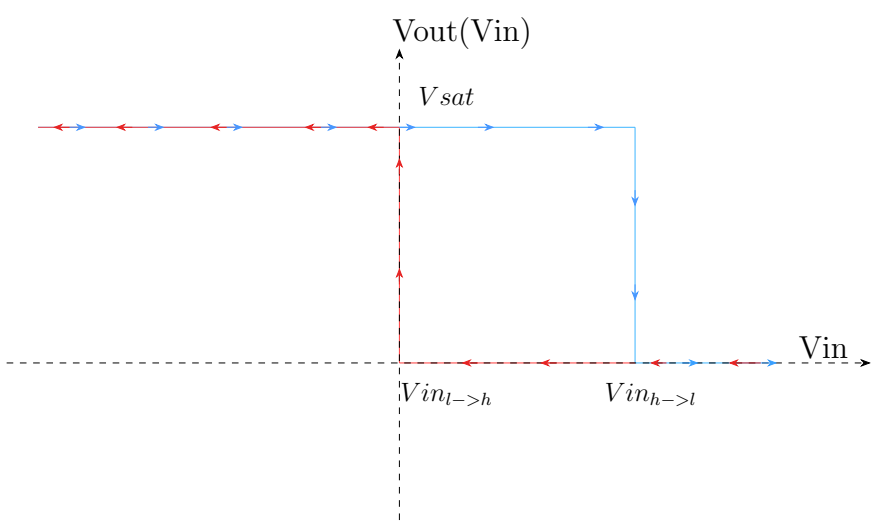

Figure 10: Hysteresis cycle of the comparator

3.2.3 Closed-Loop Circuit Simulation

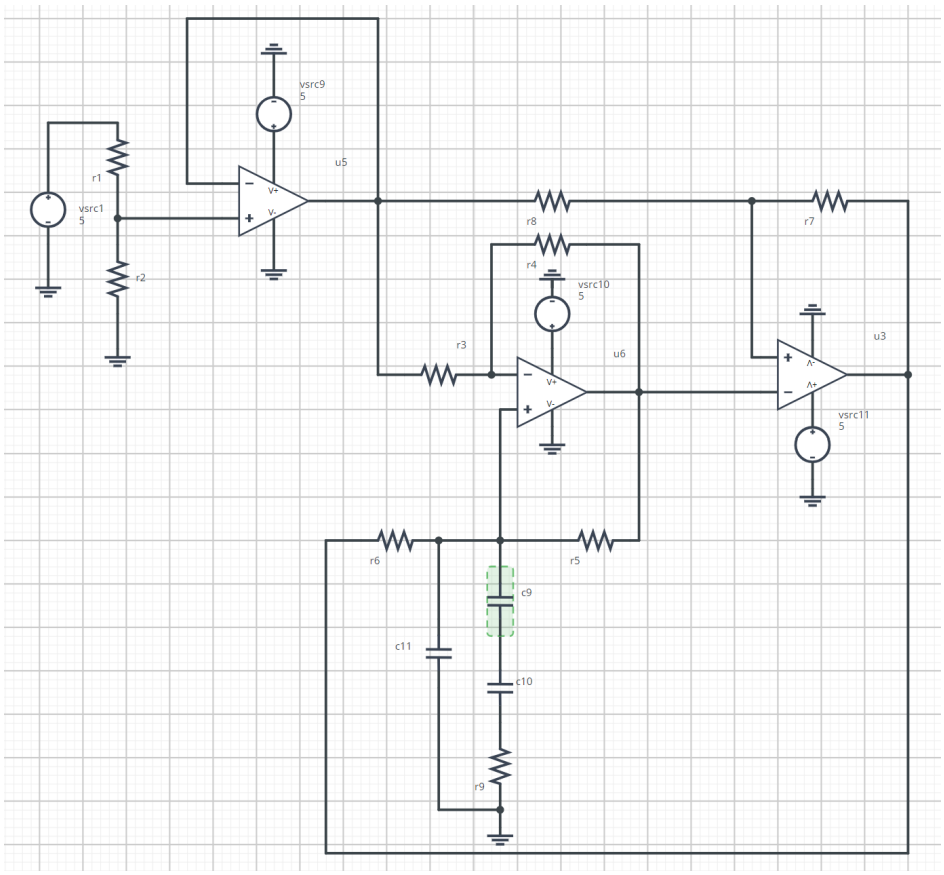

Figure 11: Conditioner circuit design in PartQuest

We perform the simulation by varying the distance between the electrode and the hand between 1 mm and 10 cm:

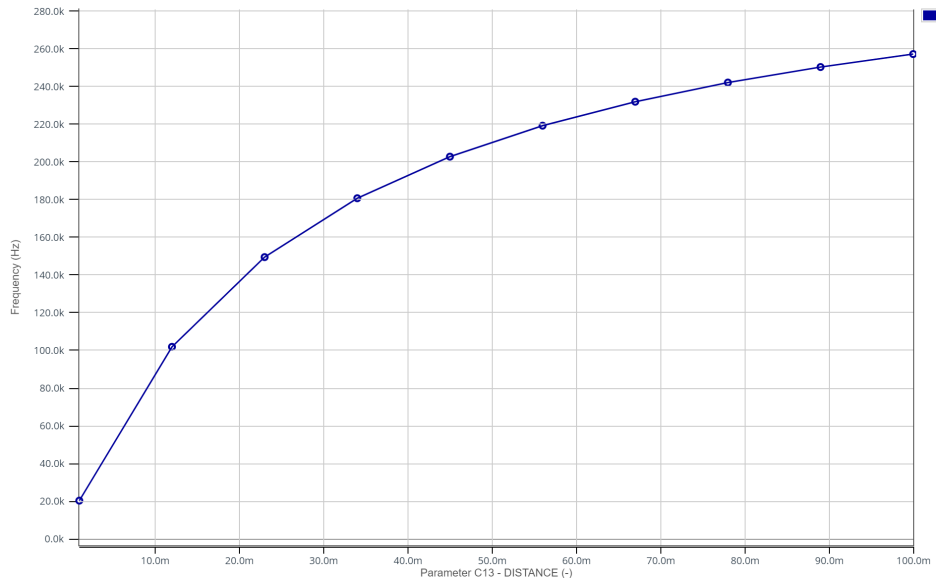

Figure 12: Simulation results with varying distance between electrode and hand (x-axis: distance, y-axis: frequency)

3.3 PCB Design with KiCAD

The PCB design was carried out in two stages. First, we designed the complete circuit for our project, including a main STM32 connected to three conditioners at the input, as well as an RGB LED, a button, and a test point output. In the first step, we routed the entire project onto a single PCB (the three conditioners, STM32, and all outputs).

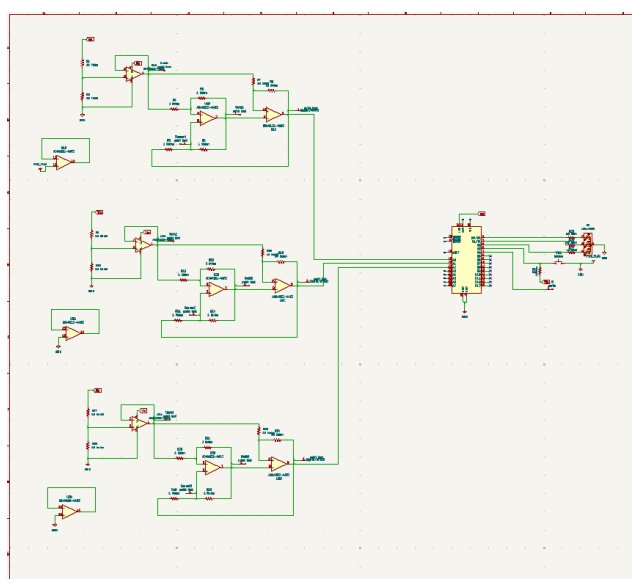

Figure 13: Project circuit with the 3 detailed conditioners

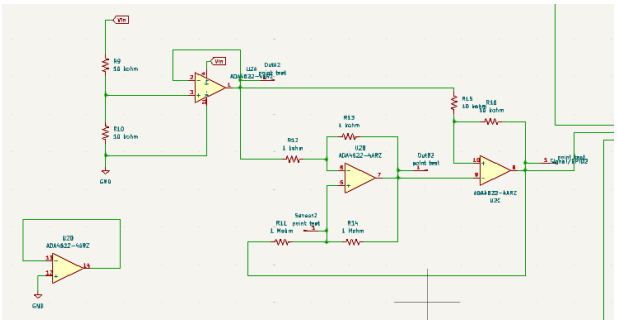

Figure 14: Zoom on one of the conditioners

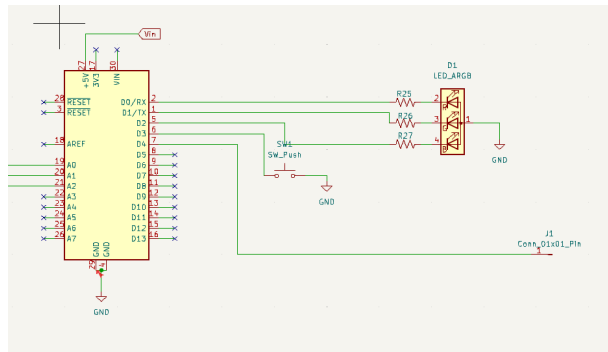

Figure 15: Zoom on STM32 outputs

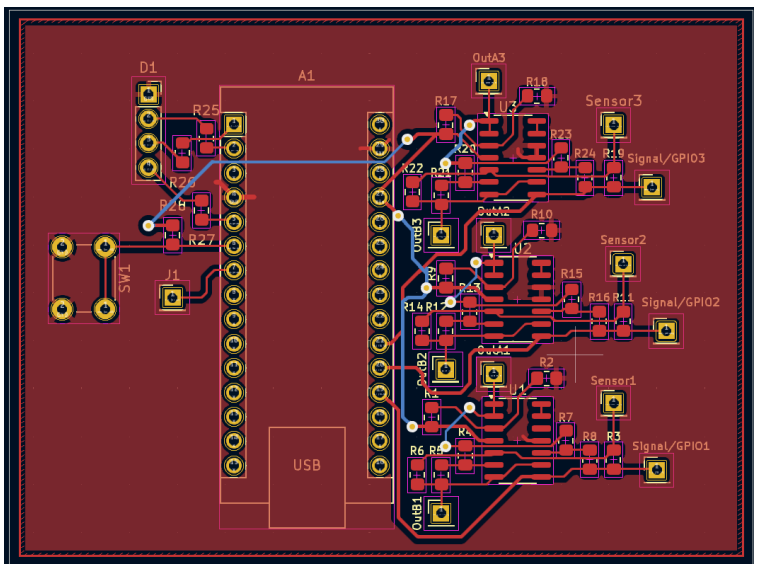

Figure 16: Circuit routing

However, due to a lack of op-amps, it was advised not to print our PCB and solder everything. We were then encouraged to redo our routing by directly integrating pre-made conditioners. This method simplified the development process, avoided errors, and simplified the manufacturing process. We therefore decided to replace the conditioners with STM32 microcontroller footprints, to use ready-made conditioners. Continuing this optimization, we also replaced the footprints of the RGB LED and the button, giving us more design freedom by removing the constraints of accessibility to certain parts of the PCB. We then started the routing process from scratch.

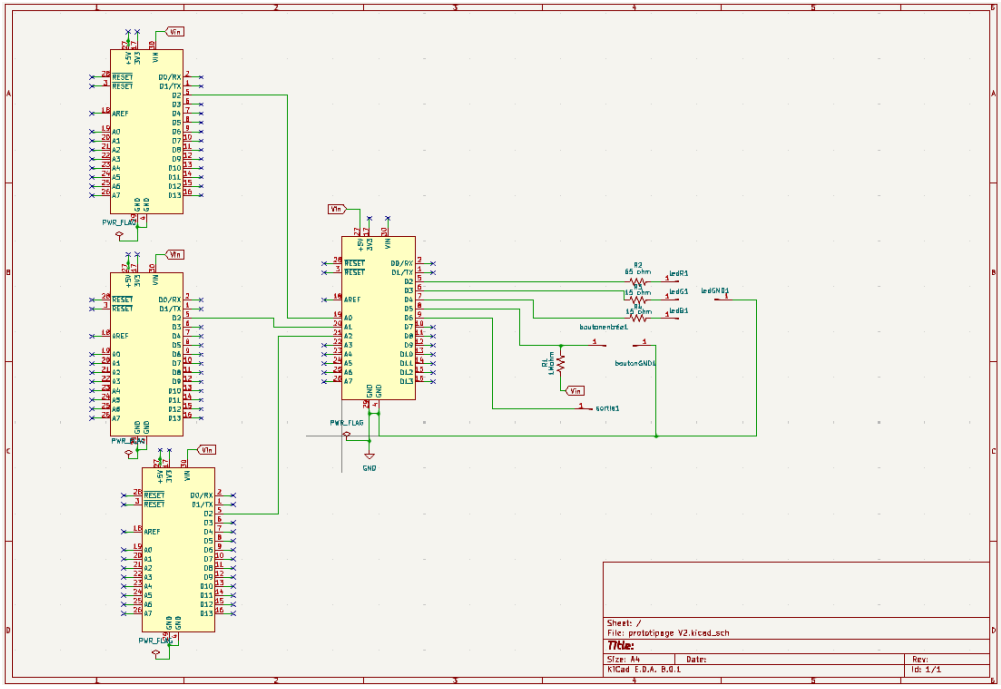

Figure 17: Circuit with STM32 instead of conditioners

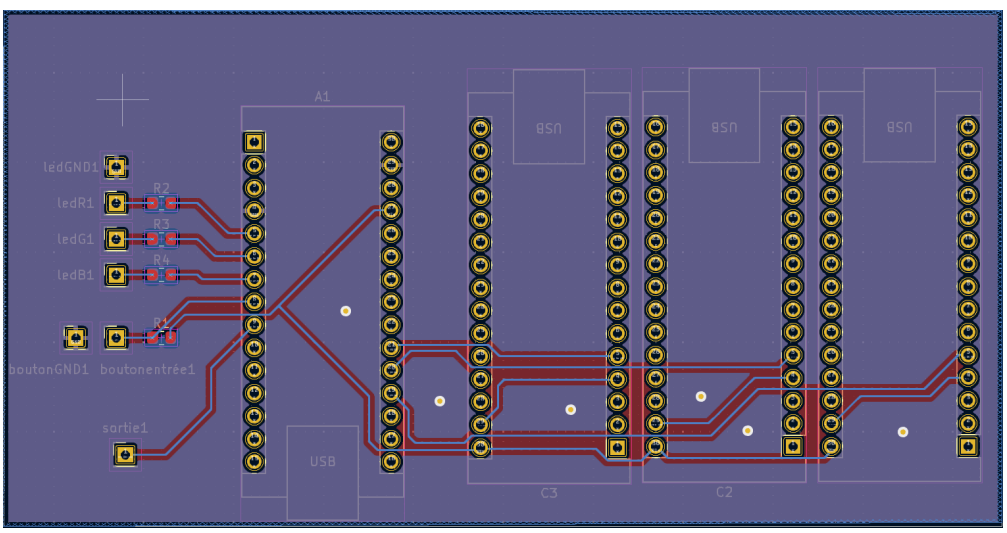

Figure 18: Routing of this circuit

This method introduced new problems, particularly regarding the orientation of the footprints to match the pre-printed conditioners and the position of the tracks for proper connection. After numerous corrections, we finally validated our PCB, which was sent for printing. This version became the foundation of our prototyping project. However, we also faced a shortage of conditioners, and in the end, we had to route two conditioners ourselves. Once the PCB was printed, we encountered another problem. The two additional conditioners provided to us were mirror images of the one we had tested previously and on which we had based the entire construction of our PCB. In other words, we could not use the PCB with the

provided conditioners. To proceed, we built the entire prototyping project on a breadboard. This entire process and the numerous changes we had to make caused significant delays and pushed back our testing phases. Without compatible PCBs and conditioners, our project's progress was limited.

3.4 Tests and Measurements

After assembling our conditioner, we tested the change in output frequency from the circuit.

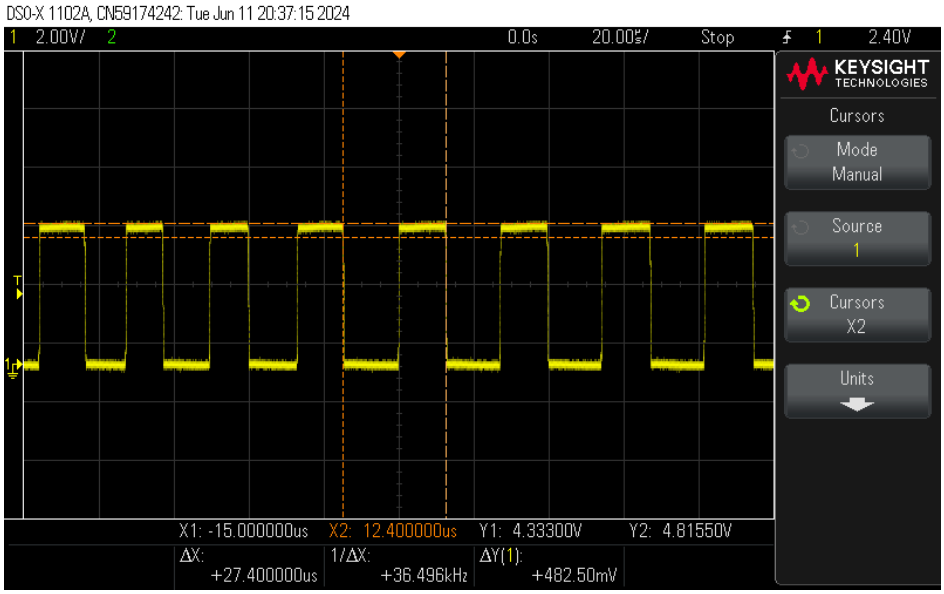

Figure 19: Conditioner output when idle

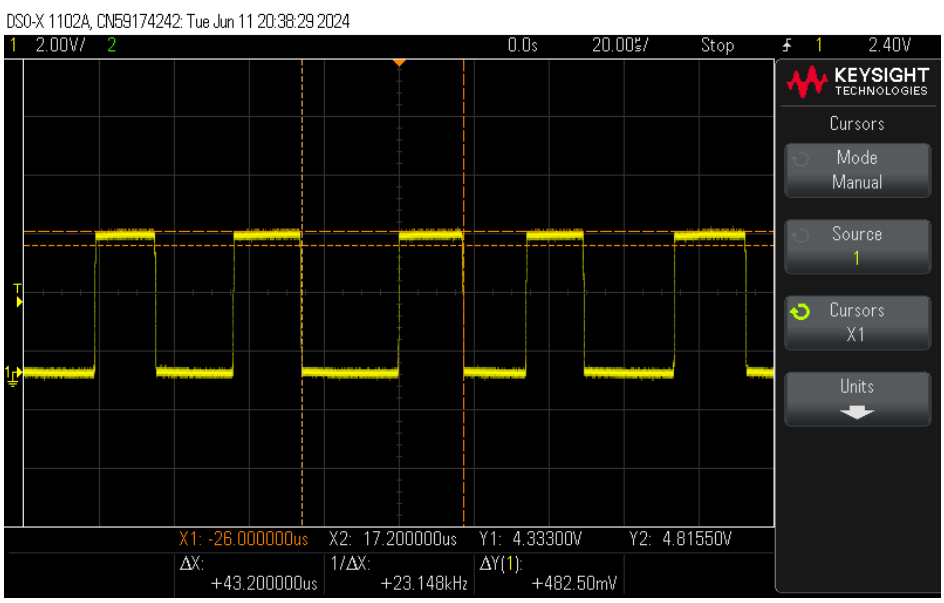

Figure 20: Conditioner output with hand presence

We observe that without a hand nearby, the frequency is 36 kHz, while as the hand approaches the copper plate, the frequency decreases, reaching 23 kHz in this example.
The frequency has indeed decreased as expected when the hand approaches the copper plate.

4 Signal Acquisition with an STM32 Microcontroller

4.1 Overall Code Architecture for Acquisition

To acquire the signal, we use the STM32 microcontroller. To determine the frequency, we use a timer that measures the time between two rising edges using an interrupt. This allows us to determine the frequency and then the capacitance using the relationship $f = \frac{1}{RC}$, with $R = 1M\Omega$.

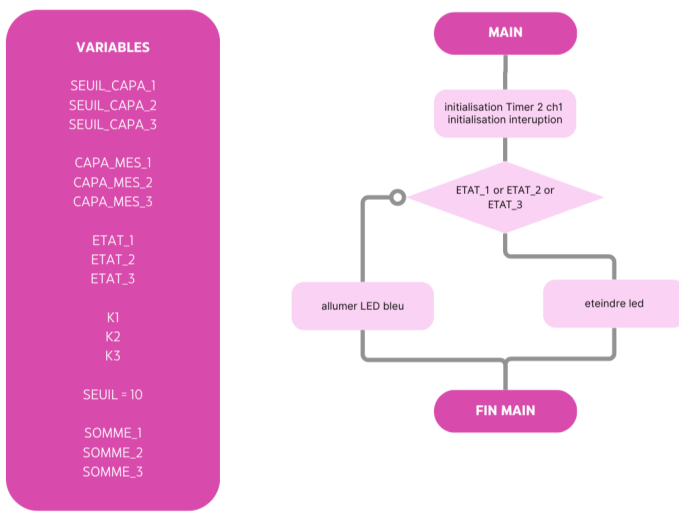

Figure 21: Main diagram

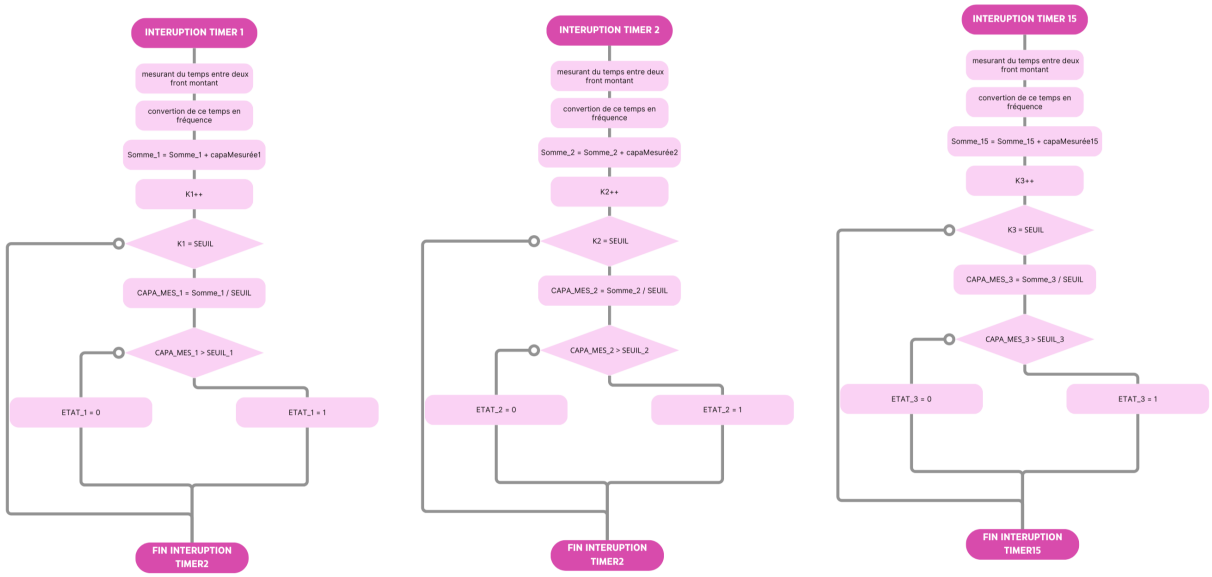

Figure 22: Interrupt diagram

For more precision, refer to the following diagram detailing the acquisition of frequency/-capacitance using the timer:

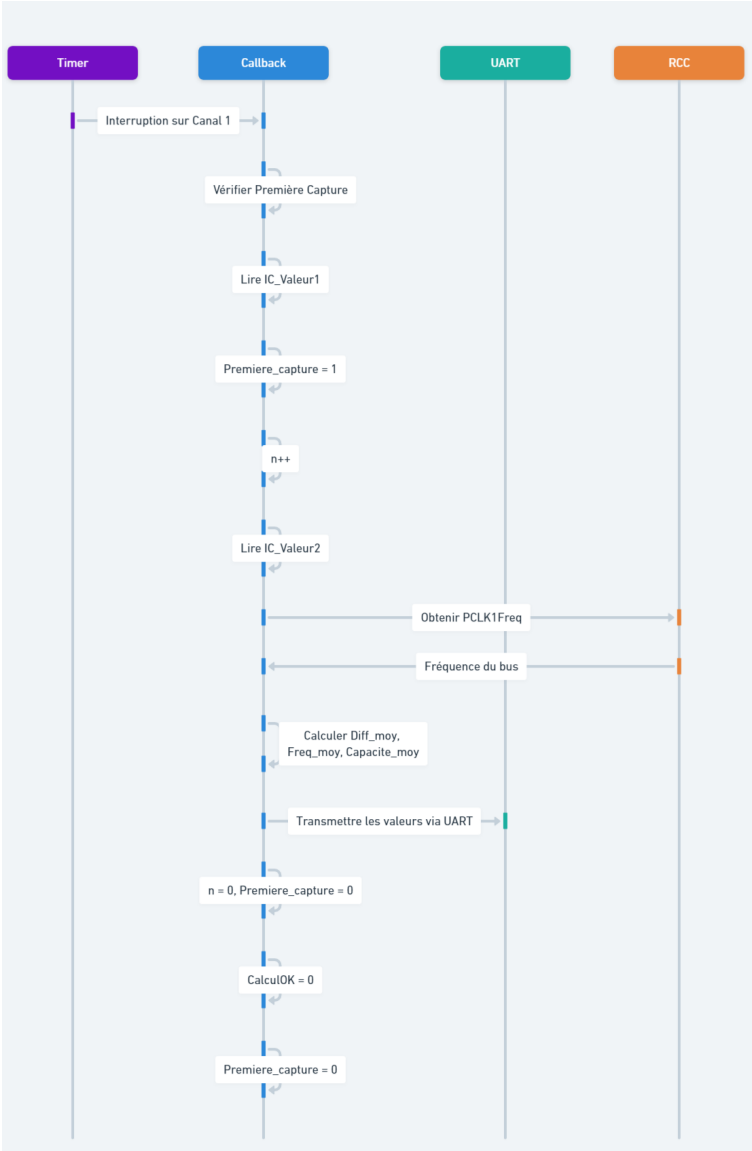

Figure 23: Capacitance calculation in the Callback

4.2 Technical Details of Signal Acquisition

For the design, we used UART transmission to visualize our capacitance values. However, we encountered several problems. The STM32 F301K8 board is a "MCU selector" and not a "Board selector," which prevented us from seeing certain connections, particularly the UART1 used for the ST-LINK. We were therefore stuck because UART1 was unusable. After some research, we found that UART2 needed to be used for data transmission.

We did not use a prescaler and set the ARR to a very large value (8000000). We activated the 'NVIC' option for the interrupt in the Callback function.

5 Project Finalization

5.1 System Tests and Measurements

After programming the microcontroller, we took several measurements to characterize the proper functioning of our system.

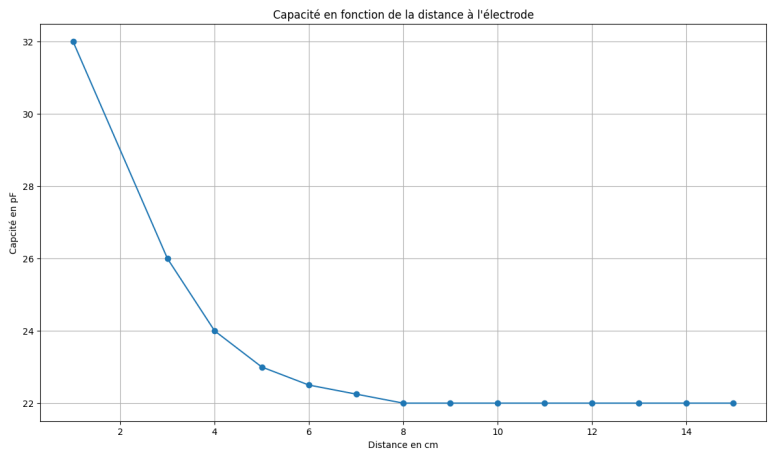

Figure 24: Capacitance as a function of distance plotted in Python

We recorded the measured capacitance at regular intervals and then plotted it against distance. We find that the trend and values are consistent with theoretical ones.

We note that beyond 8 cm, the capacitance variation is almost zero, making any measurement imprecise. Therefore, we will avoid exceeding this value when setting the detection threshold for the 2 positions of the hand above the electrode. The closer the threshold is to 0 cm, the more precise the system will be, but it becomes more difficult for the user to correctly position their hand in the 2 positions: thus, it is a compromise between precision and ergonomics.

We detect 2 positions for the hand: near or far:

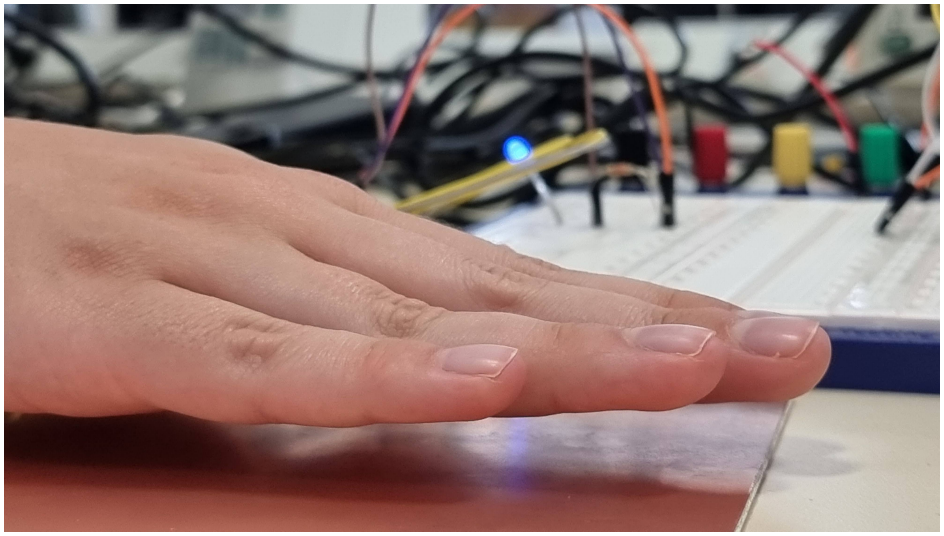

Figure 25: LED lit in blue for the near hand position

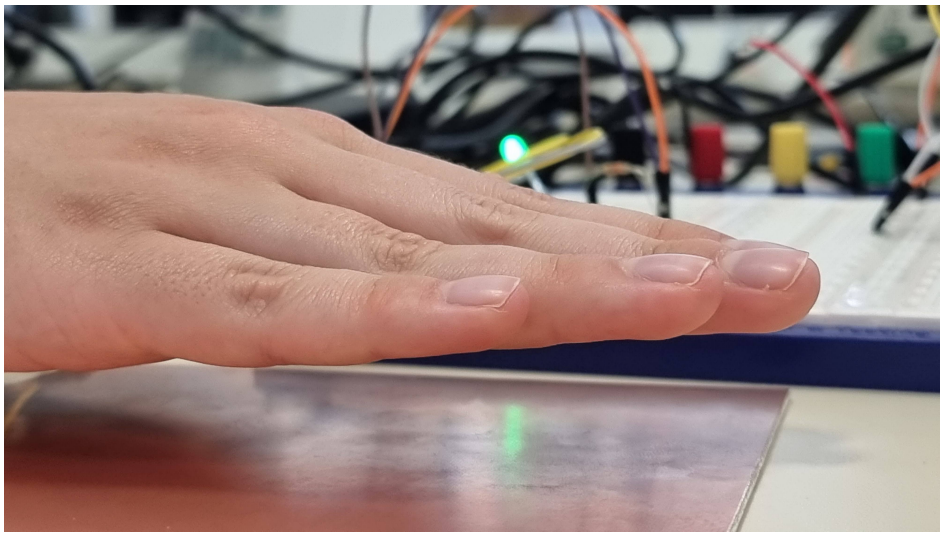

Figure 26: LED lit in green for the far hand position

The color of the LED allows the user to correctly position their hand at the right distance from the electrode to "enter" the desired code.

This system works for the 3 electrodes, allowing the desired code to be entered and the requested action to be performed.

To ensure the hand's position, several measurements are made by the microcontroller before turning on the LED in the correct color. This reduces errors and improves system accuracy.

5.2 Final Manufacturing

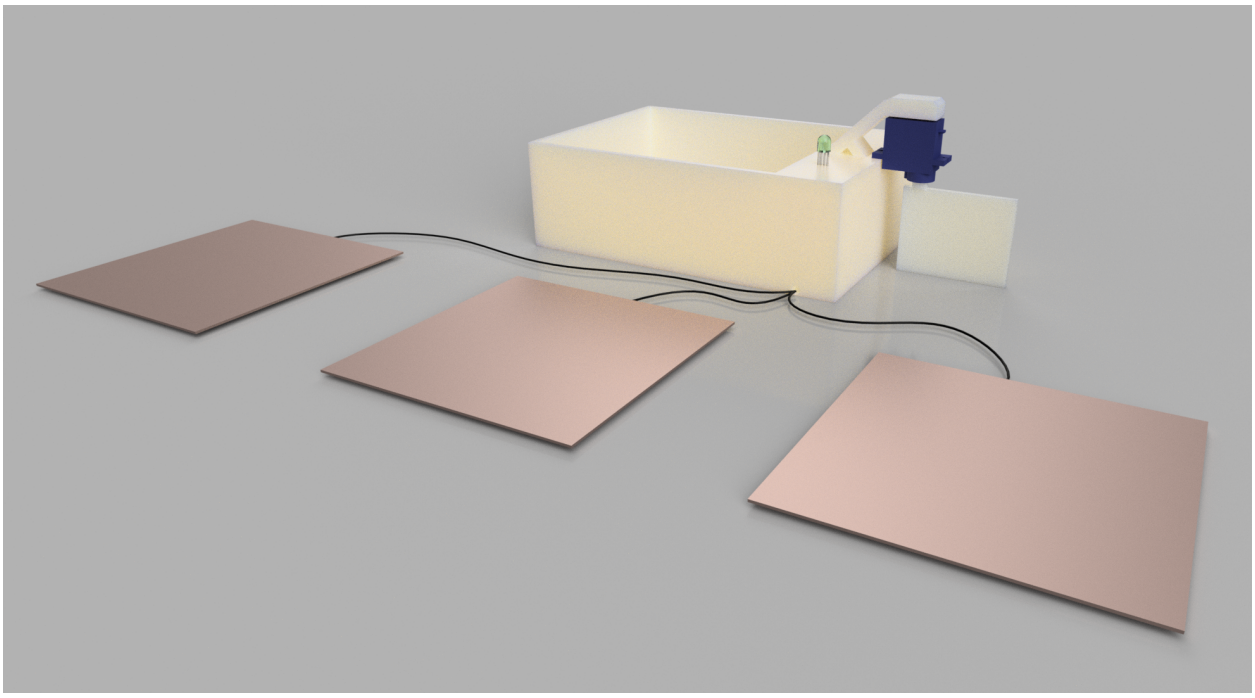

Figure 27: 3D modeling of the project

We modeled a 3D-printed box that houses the microcontroller and the 3 conditioners for the 3 electrodes.

The RGB LED is located on top and lights up to inform the user whether their hand is correctly positioned or not.

Finally, our actuator is a servo motor that opens a small door, which in real life could be a larger door providing access to a sensitive area, for example.

6 Conclusion and Improvement Prospects

To conclude, not all the objectives set at the beginning of our project were achieved, but we still made significant progress. Unfortunately, the security objective could not be fully addressed due to the technical difficulties encountered during the PCB fabrication and code development. These obstacles prevented us from addressing this crucial subject.

However, our conditioner avoided physical contact, ensuring good hygiene. Nonetheless, this aspect could still be improved. By optimizing the conditioner, we could increase the distance between the hand and the copper plate, providing better protection and comfort for users.

Moreover, the ergonomic simplicity of our project fully adhered to our goal of intuitiveness. This approach made the use of our device easier, making interactions more natural and accessible for all. We remain confident that these solid foundations will allow us to overcome the challenges encountered and bring future improvements to achieve all the initial objectives.

Future prospects for this system include several potential improvements. First, optimizing the conditioner and signal management could further improve system accuracy and reliability.

Secondly, integrating a more intuitive user interface could make the digital code lock easier to use.

Finally, expanding this system to other security and access applications could broaden its scope and make it more versatile in various contexts.

7 Appendices

7.1 Capacitor Code for PartQuest Simulation

Code of the modified capacitance to vary the inter-plate distance modeling the distance between the hand and the electrode:

```
library IEEE;
use IEEE.electrical_systems.all;
use IEEE.energy_systems.all;

entity capaciteelectrode is

  generic (
    use_initial_voltage: boolean := False;
    initial_voltage: voltage := 0.0;
    distance:real:=1.0e-2;
    longueur:real:=10.0e-2;
    epsilon:real:=8.85e-12
  );

  port (terminal p1, p2 : electrical);

end entity capaciteelectrode;


architecture default of  capaciteelectrode is

  quantity v across i through p1 to p2;
  quantity power_input   : power;
  quantity energy_stored : energy;
  quantity capa: real;

begin

```

```
  if domain = quiescent_domain use
    if use_initial_voltage use
      v == initial_voltage;
    else
      i == 0.0;
    end use;
  else
    i == capa*v'dot;

  end use;
      capa==epsilon*(longueur*longueur)/distance;
  --- For information only
  power_input == v*i;
  energy_stored == 0.5*capa*v**2;

end architecture default;
```

7.2 STM32 Code

STM32 microcontroller code from our project, allowing for the reading of the electrode's capacitance:

```
//For electrode 1
volatile int CalculOK_1;
volatile float Diff_moy_1;
volatile float IC_Valeur1_1;
volatile float IC_Valeur2_1;
volatile int Premiere_capture_1;

//For averaging electrode 1 values
volatile float n_1 = 0;
volatile float Freq_moy_1 = 0;
volatile float Etat_distance_1;
volatile float Capacite_moy_1; // Capacitance value for electrode 1


// Initialize the cap_data value, to format it
uint8_t cap_data_1[5000] = {'\0'};



int main(void)
{
  HAL_Init();
  SystemClock_Config();
  MX_GPIO_Init();
  MX_TIM2_Init();
  MX_USART2_UART_Init();
  HAL_TIM_IC_Start_IT(&htim2, TIM_CHANNEL_1);

  while (1)
  {
    if (Etat_distance_1){
      HAL_GPIO_WritePin(LED_ROUGE_D6_GPIO_Port, LED_ROUGE_D6_Pin, GPIO_PIN_SET);
      HAL_GPIO_WritePin(LED_BLEU_D5_GPIO_Port, LED_BLEU_D5_Pin, GPIO_PIN_RESET);
    }
    else{
      HAL_GPIO_WritePin(LED_ROUGE_D6_GPIO_Port, LED_ROUGE_D6_Pin, GPIO_PIN_RESET);
      HAL_GPIO_WritePin(LED_BLEU_D5_GPIO_Port, LED_BLEU_D5_Pin, GPIO_PIN_SET);
    }
  }
}
```

```c

void HAL_TIM_IC_CaptureCallback(TIM_HandleTypeDef*htim2){


  // -------- FOR CHANNEL 1 -------- //



  if (htim2->Channel == HAL_TIM_ACTIVE_CHANNEL_1)
    //HAL_UART_Transmit(&huart2, "I am in the callback \n", 30 * sizeof(char), 200);
  {

    if (Premiere_capture_1 ==0)
    {
      IC_Valeur1_1 = HAL_TIM_ReadCapturedValue(htim2, TIM_CHANNEL_1);
      Premiere_capture_1 =1;
    }
    else if (Premiere_capture_1)
    {
      n_1 ++;
      if(n_1 == 10){
        IC_Valeur2_1 = HAL_TIM_ReadCapturedValue(htim2, TIM_CHANNEL_1);
        if (IC_Valeur2_1 > IC_Valeur1_1)
        {
          Diff_moy_1 = (IC_Valeur2_1 - IC_Valeur1_1)/n_1;
          Freq_moy_1= HAL_RCC_GetPCLK1Freq()/Diff_moy_1; // Frequency in Hz
          CalculOK_1 =1;

          // Capacitance value calculation in pF

          Capacite_moy_1 = 1000000/(Freq_moy_1*R6); // In PicoFarads

          if (Capacite_moy_1 > 31){
            Etat_distance_1 = 1;
          }
          else{
            Etat_distance_1 = 0;
          }
          // Send the values via UART
          sprintf(cap_data_1, "Frequency = %f Hz , Capacitance = %f pF  Distance threshold: %f\n\r", Freq_moy_1, Capacite_moy_1, Etat_distance_1);
          HAL_UART_Transmit(&huart2, cap_data_1, sizeof(cap_data_1), 200);
        }
        else
          CalculOK_1 =0;
        Premiere_capture_1 = 0;
        n_1 = 0;
      }


    }
  }
}
```

7.3 Demonstrations

- **Capacitance Expression for a Planar Capacitor**

  Symmetry of the Electric Field:

  For an infinite planar capacitor, the plates are infinite and uniformly charged. This implies that the electric field $\vec{E}$ must be perpendicular to the plates and uniform be-

tween them due to the translation invariance in the directions orthogonal to the plates.

Gauss's law is given by:

$$\oiint_{\Sigma} \vec{E} \cdot d\vec{S} = \frac{Q_{int}}{\epsilon}$$

To apply this law, consider a Gaussian surface in the shape of a cylinder passing through the two plates, where the ends of the cylinder are parallel to the capacitor plates. The symmetry of the problem tells us that the electric field is constant and perpendicular to the plates.

For a plate with a surface charge density σ, the total charge Q_{int} enclosed by the Gaussian surface is:

$$Q_{int} = \sigma \cdot S$$

where S is the surface area of the cylinder ends.

The contributions from the lateral walls of the cylinder cancel out, so the Gauss integral reduces to the two bases of the cylinder:

$$E \cdot S + (-E) \cdot (-S) = \frac{\sigma \cdot S}{\epsilon}$$

$$2ES = \frac{\sigma S}{\epsilon}$$

$$E = \frac{\sigma}{2\epsilon}$$

Potential Difference Calculation:

The potential difference V between the two plates separated by a distance d is given by the integral of the electric field over this distance:

$$V = \int_0^d E\, dx = E \cdot d$$

Using the surface charge density $\sigma = \frac{Q}{S}$, where S is the surface area of one plate, we obtain:

$$V = \left(\frac{\sigma}{\epsilon}\right) \cdot d = \frac{Q}{\epsilon S} \cdot d$$

Capacitance Determination:

The capacitance C of a capacitor is defined by the relationship between the charge Q and the potential difference V:

$$C = \frac{Q}{V}$$

Substituting the expression for V that we found:

$$C = \frac{Q}{\frac{Qd}{\epsilon S}} = \frac{\epsilon S}{d}$$

We have demonstrated that the capacitance of an infinite planar capacitor, with a distance d between the plates and surface area S, is given by:

$$C = \frac{\epsilon S}{d}$$

- **Constant Current Generator:**
  According to Millman's theorem:

  $V_- = V_{out}\frac{R_1}{R_1+R_1}$

  $V_+ = \frac{\frac{V_{in}}{R_4}+\frac{V_{out}}{R_3}}{\frac{1}{R_4}+\frac{1}{Z_c}+\frac{1}{R_3}}$

  Furthermore, since the op-amp operates in a linear regime, $V_+ = V_-$. Thus, $V_+ = \frac{\frac{V_{in}}{R_4}+\frac{R_1+R_1}{R_1R_3}V_+}{\frac{1}{R_4}+\frac{1}{Z_c}+\frac{1}{R_3}}$
  $\Leftrightarrow V_+ = \frac{V_{in}}{R_4((\frac{1}{R_4}+\frac{1}{Z_c}+\frac{1}{R_3}))-\frac{R_1+R_1}{R_1R_3}} \Leftrightarrow V_+ = \frac{V_{in}}{1+\frac{R_4}{Z_cd}+\frac{R_4}{R_3}-\frac{R_4(R_1+R_1)}{R_1R_3}}$

  Now, according to Ohm's law:

  $i = \frac{V_+}{Z_c} = \frac{V_{in}}{Z_c+R_4+\frac{Z_cR_4}{R_3}-\frac{Z_cR_4(R_1+R_1)}{R_1R_3}}$

  We want the current i to be independent of the capacitance impedance, so we must have:

  $Z_c + \frac{R_4Z_c}{R_3} - \frac{Z_cR_4(R_1+R_1)}{R_1R_3} = 0.$

  Therefore, $\boxed{i = \frac{V_{in}}{R_4}}$.

- **Hysteresis Cycle:**
  - Suppose that $Vout = Vsat \Leftrightarrow \epsilon = V_+ - V_- > 0$.

    Now, $V_- = Vin$ and by Ohm's law, we have $i = \frac{Vsat-V_+}{R5} = \frac{V_+}{R6}$, because $i_+ = 0$.

    Thus, $R6(Vsat - V_+) = R5 \cdot V_+ \Leftrightarrow V_+ = \frac{R6}{R5+R6}$

    Thus, $\epsilon > 0 \Leftrightarrow \frac{R6}{R5+R6}Vsat - Vin > 0 \Leftrightarrow Vin < \frac{R6}{R5+R6}Vsat$.

    The output $Vout$ remains high as long as $\epsilon > 0$, i.e.,
    $\boxed{Vin < Vin_{h->l} \text{ with } Vin_{h->l} = \frac{R6}{R5+R6}Vsat}$
  - Suppose that $Vout = 0 \Leftrightarrow \epsilon = V_+ - V_- < 0$.

    $\epsilon > 0 \Leftrightarrow -Vin > 0 \Leftrightarrow Vin < 0$.

    The output $Vout$ remains high as long as $\epsilon > 0$, i.e., $Vin > 0$, so $\boxed{Vin_{l->h} = 0}$.