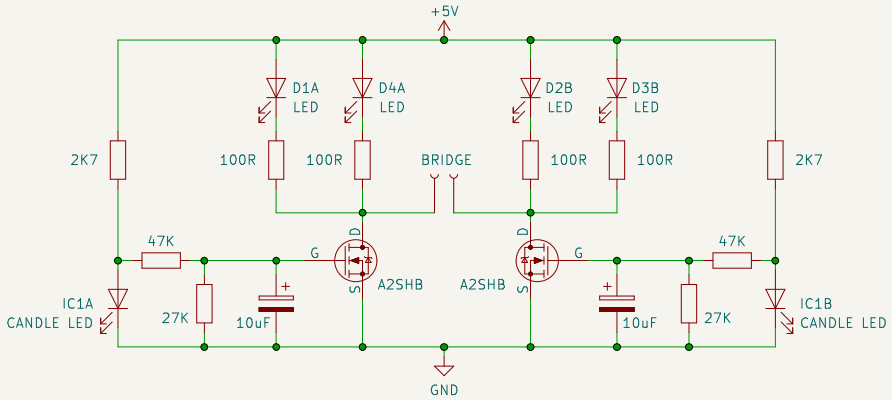

Myriameter.uk

Sheet:

File: Chaos LED Module V.1.0.kicad_sch

Title: LED Chaos Module V.1.0

Size: A5	Date: 7-5-2023	Rev: V.1.2
KiCad E.D.A. eeschema 7.0.1		Id: 1/1