Myriameter.uk

Official.
REV-A

CHAOS MODULE Instructions

Below is a picture of 1 Chaos LED module, it is comprised of 4 identical separate units.

The RED sections are for positive 5V.
The BLUE sections are for Ground or 0V.

When more than 1 module is used, they can be electrically linked together using these pads.

There is provision for a 16 pin USB-C vertical connector in the centre, or flying leads.
If more than one USB connector is used within an array, it can be used in a loop in and out fashion for other separate boards as long as consideration is given to the current handling capabilities of the supply and associated wiring, the PCB itself is rated for 2A from the connector.

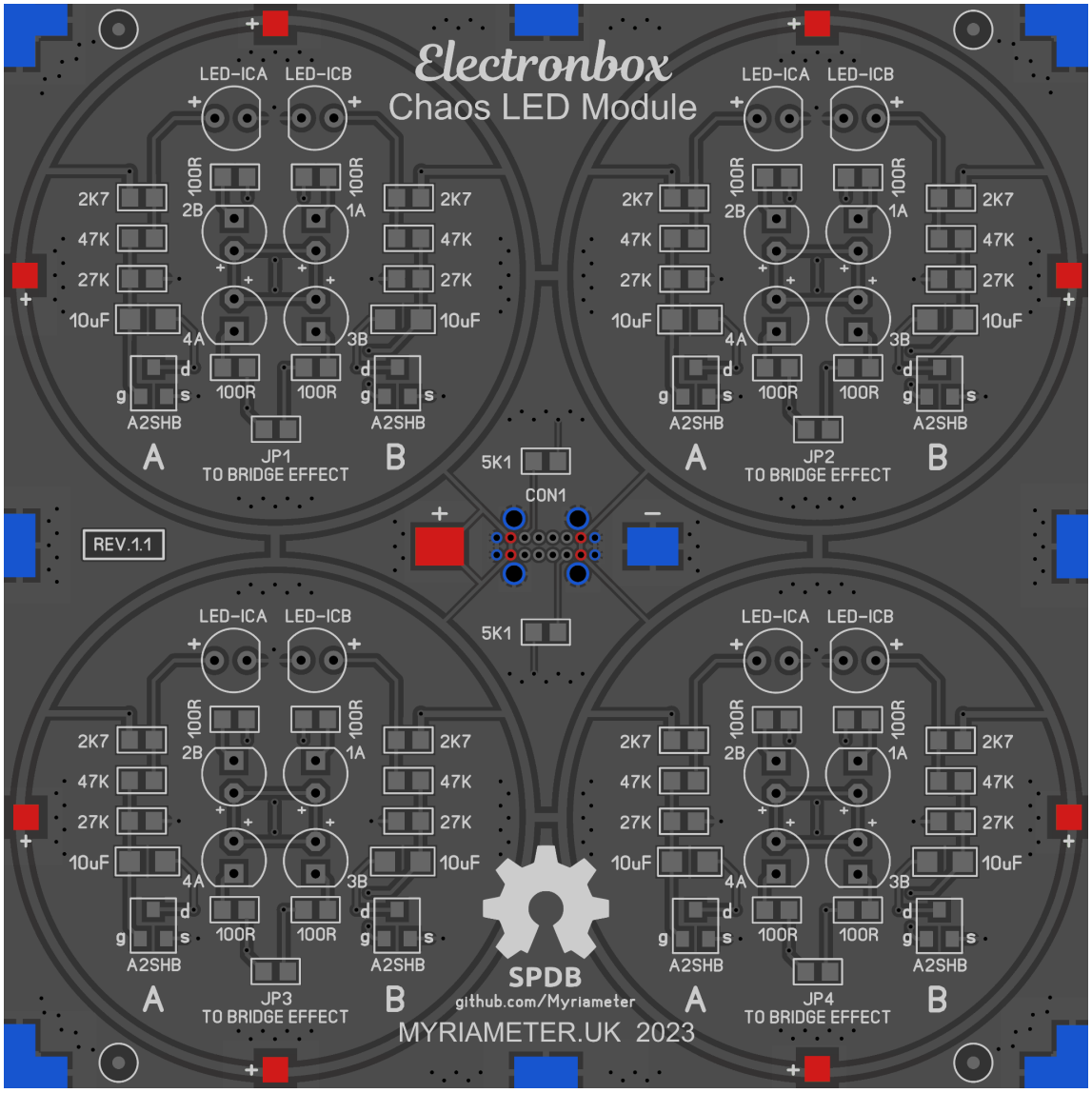

This is a close up of one of the clusters:

It is comprised of 2 identical halves, side A and side B.

Side A drives LED's 1A and 4A
Side B drives LED's 2B and 3B

The LEDs are driven diagonally to improve illumination evenness.
It is recommended that "flat top" LEDs are used in conjunction with ping-pong ball diffusers.

The 100R resistors limit the current to each LED to below 20mA when using devices with a ~3V drop.
This can be changed to suit other devices.

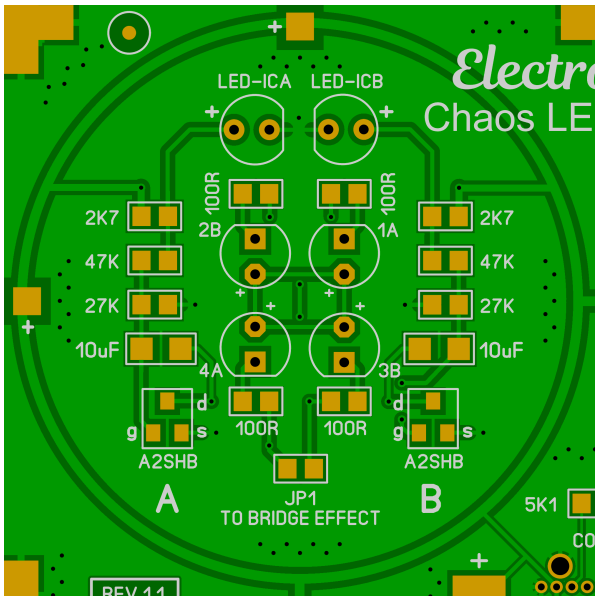

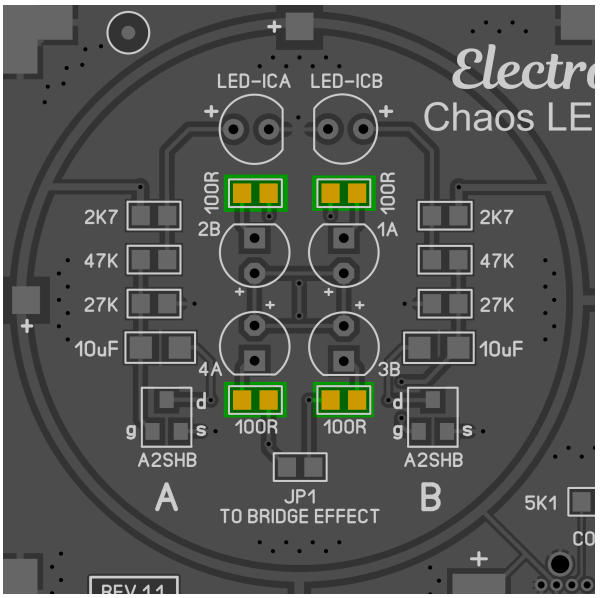

There is also a jumper position to bridge the effect.

If you only want to populate the A side of the unit, it will work fine however, if you want double the brightness, you can install the B LED's and the jumper.

If you want to fully populate the A and B sides of the unit and would like the flashes to be merged across the A and B LED's, you can again install the jumper.

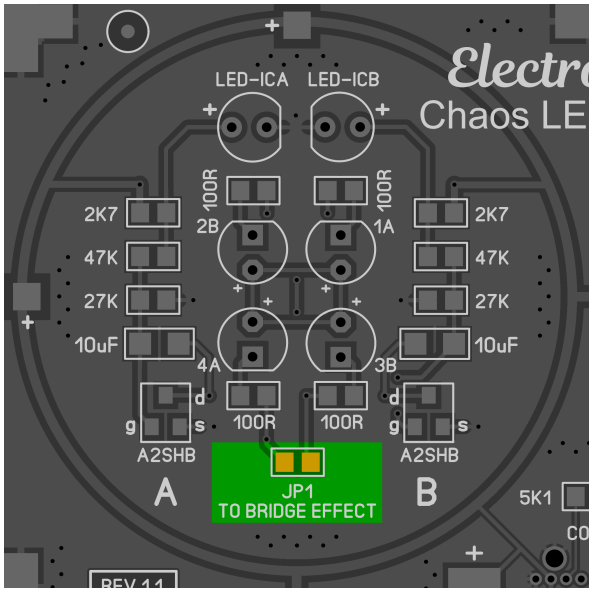

Build images:

Holes CNC cut for proper ball alignment

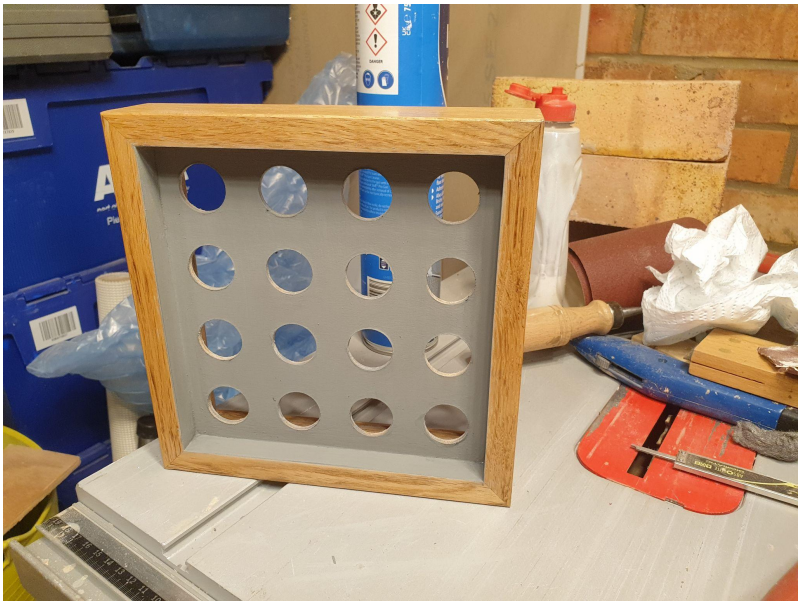

Installed in custom oak frame

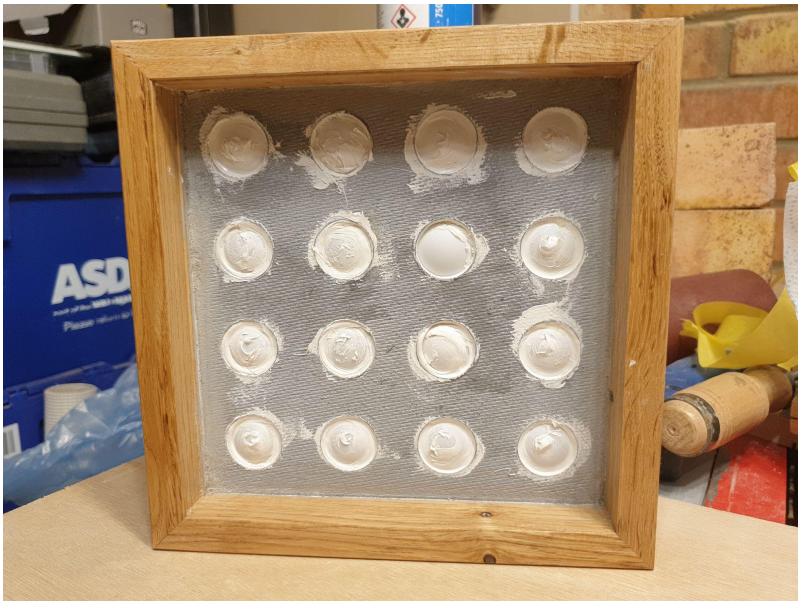

Balls installed by glueing in with neutral cure silicone. Once cured the holes are cut out of the back of each ball

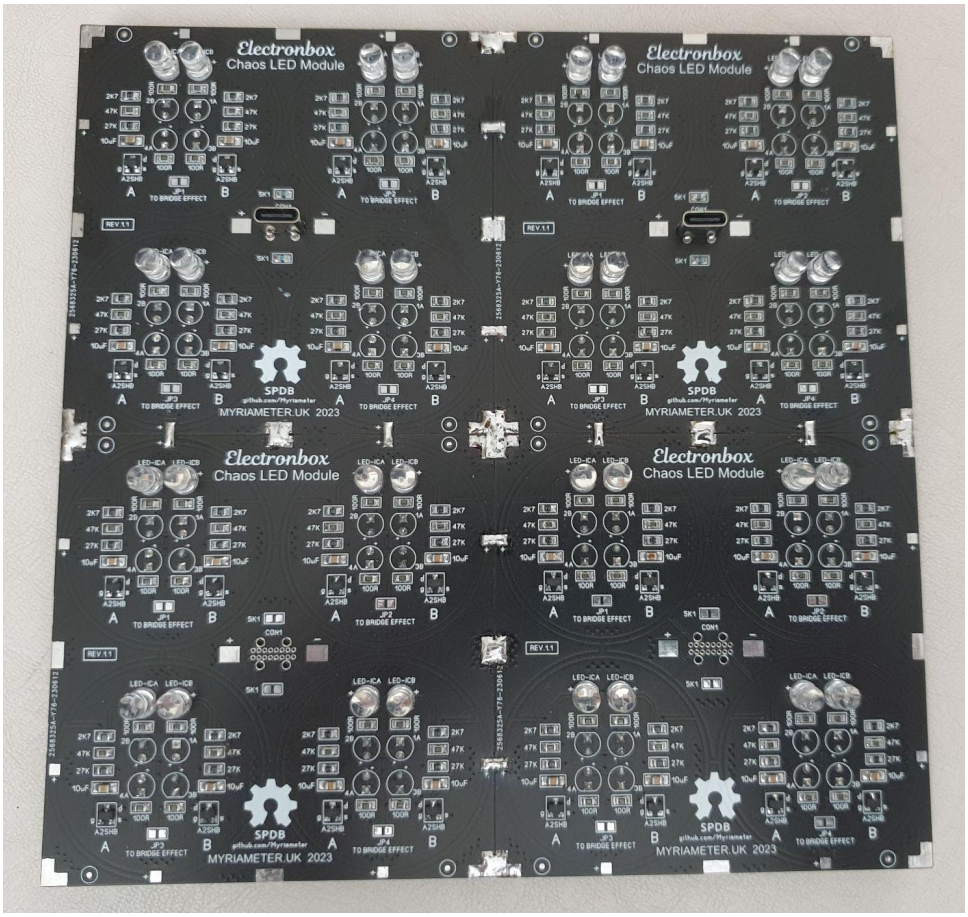

Completed PCB
4 modules are used in this example

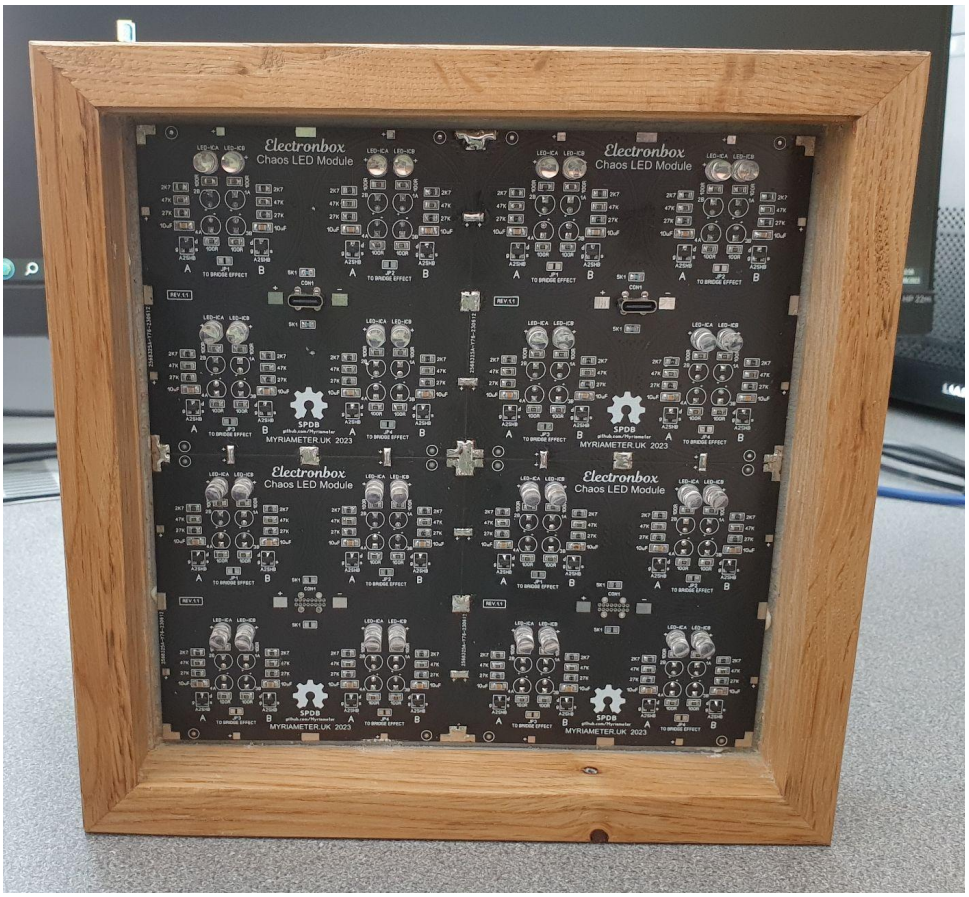
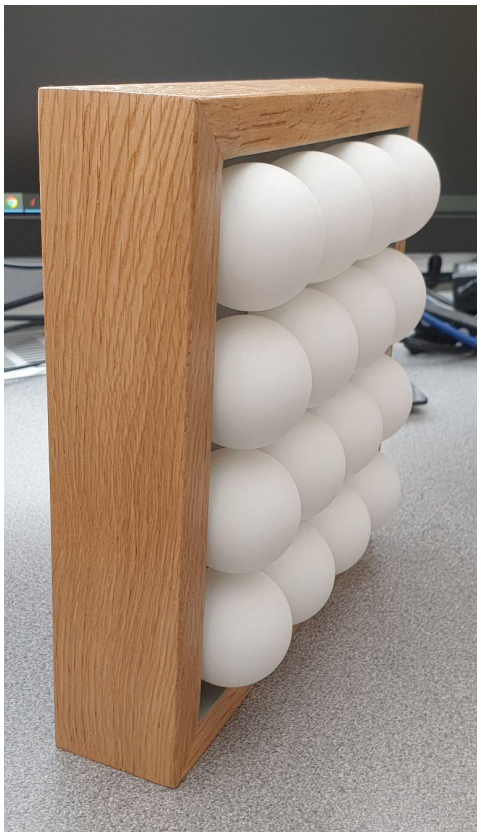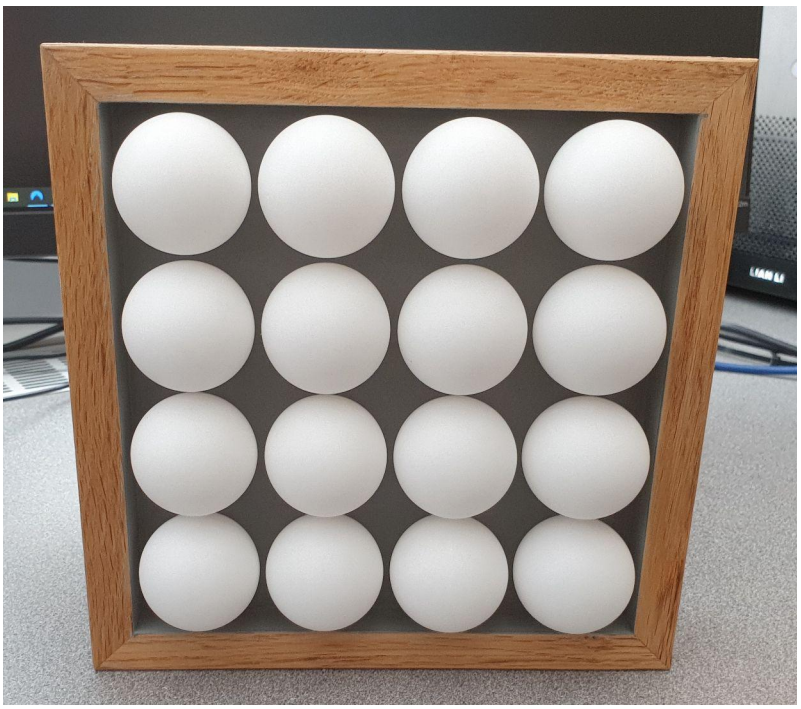
PCB glued to ball board