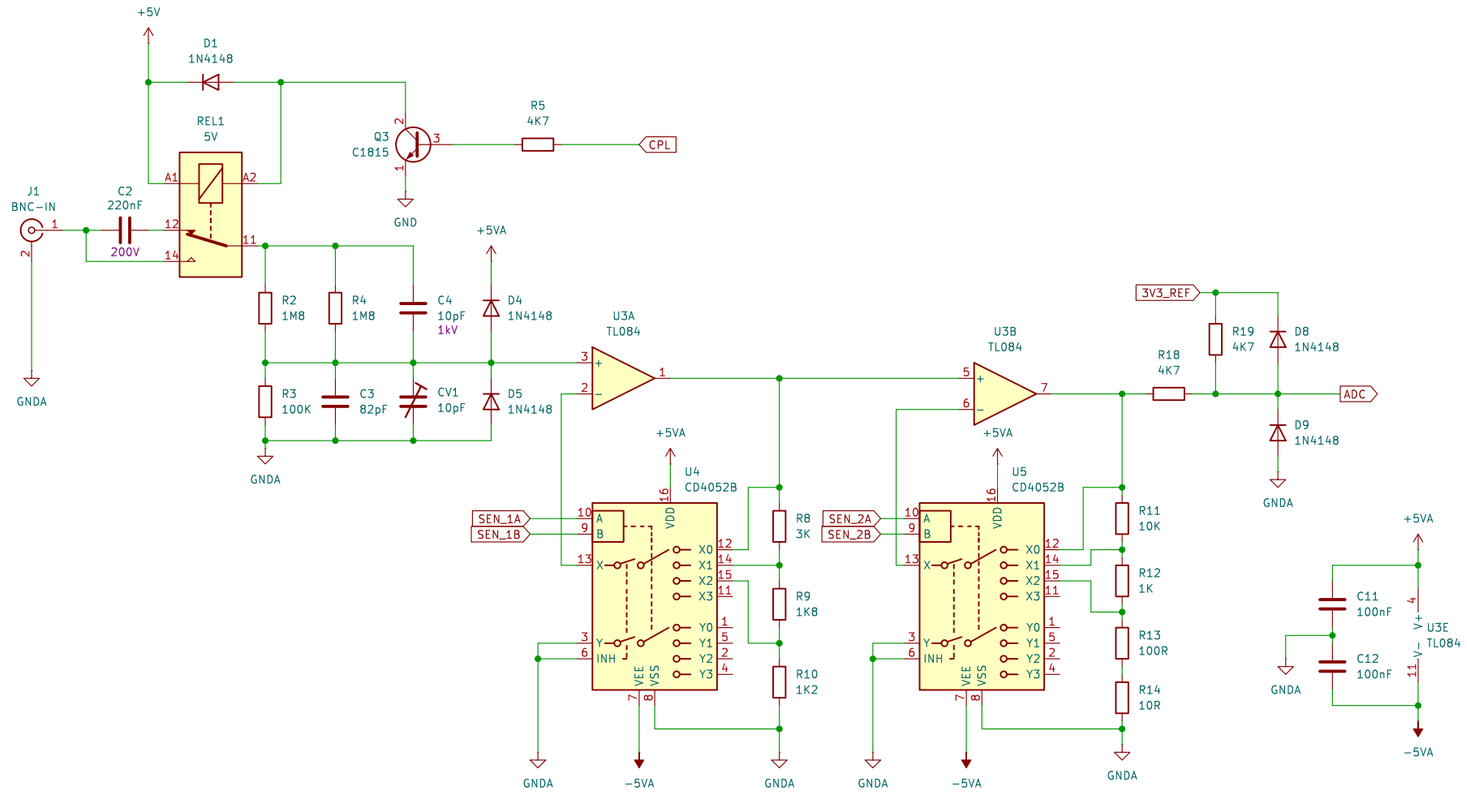

Coming Soon...

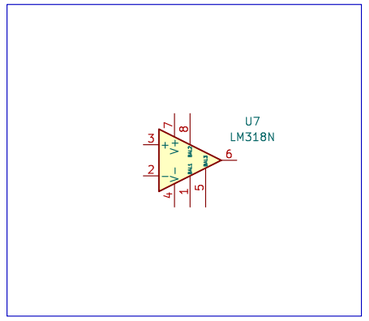

UnUsed OP-AMPs

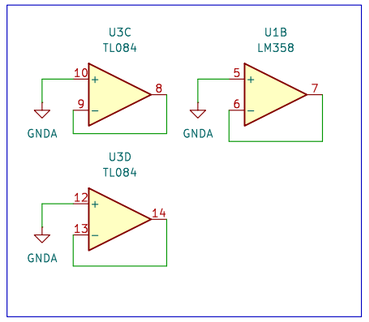

Negative Voltage Generator

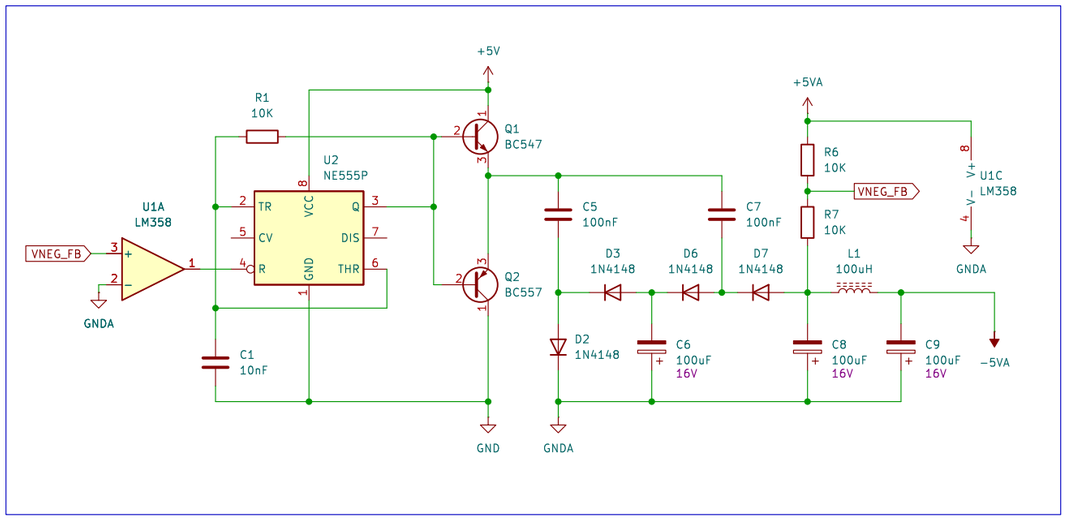

3V3 ADC Reference Regulator

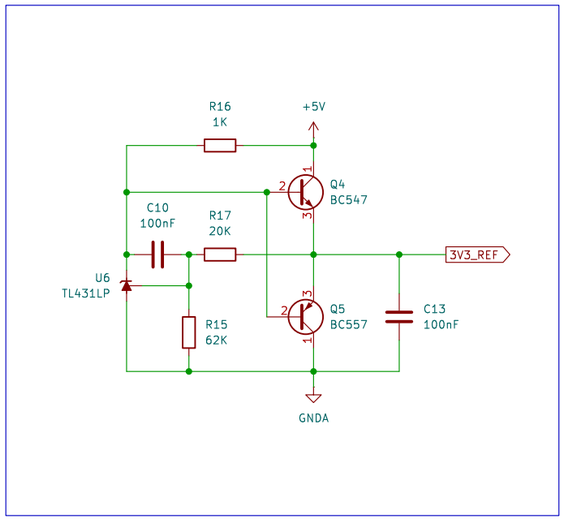

5V LC Filter

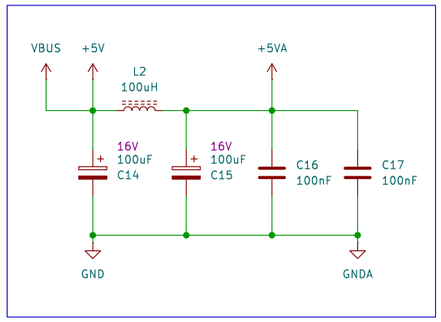

First Version Date : 17-Oct-2024
by : HS6502
Sheet: /
File: RP-Pico-Scope.kicad_sch

Title: Oscope Analog Part

Size: A3	Date: 2024-11-06	**Rev: 2.1.1**
KiCad E.D.A. 8.0.1		Id: 1/1