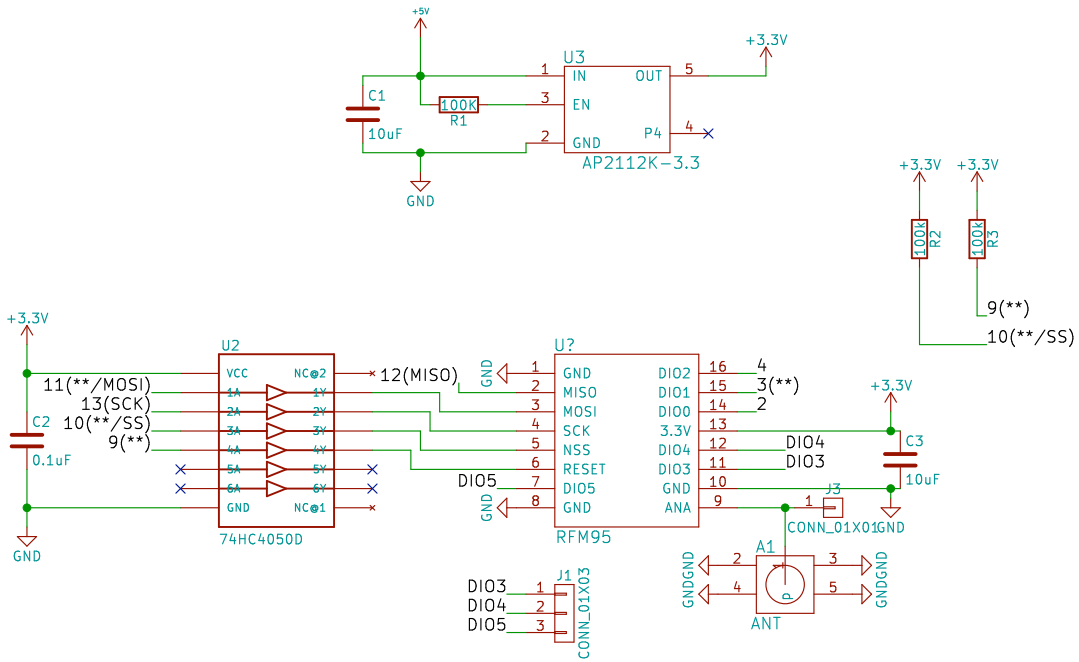

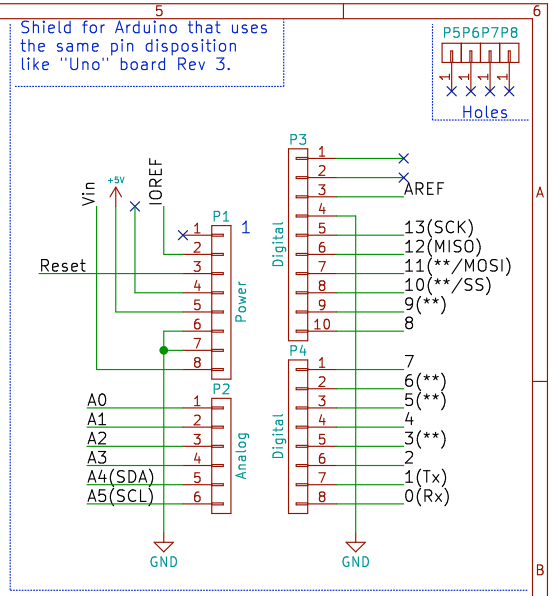

Eduardo Contreras
Electronic Cats

Sheet: /
File: ArduinoShieldLoRa.sch

Title: Arduino LoRa Shield

Size: A4	Date: 2017-06-12	**Rev: v0.1**
KiCad E.D.A. kicad 4.0.7		Id: 1/1