MICROCONTROLLER SAMD21

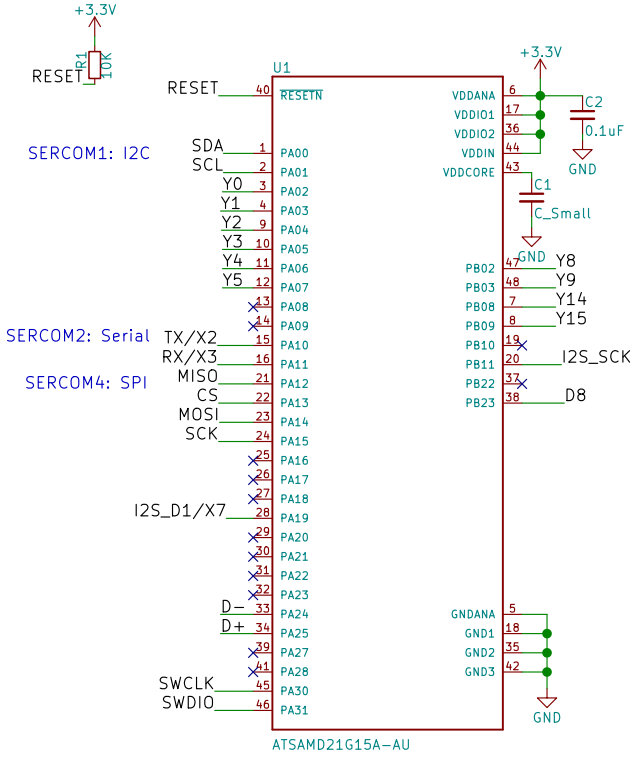

POWER AND FILTERING

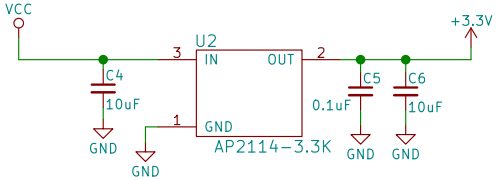

USB, SWD PROGRAMMING AND LEDS

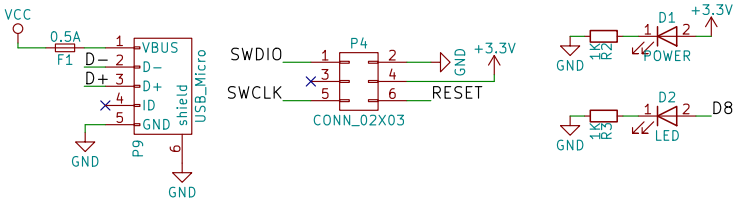

SENSOR CAPACITIVE

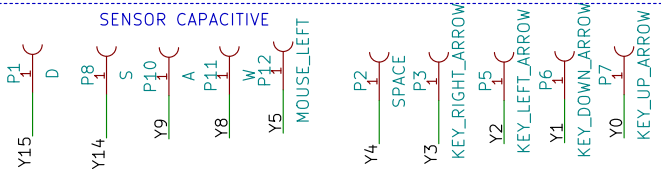

PIN EXTRAS

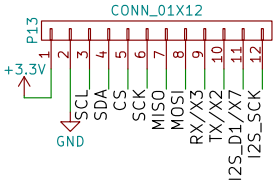

Eduardo Contreras
Andres Sabas
Electronic Cats

Sheet: /
File: Meow Meow.sch

Title: Meow Meow

Size: A4	Date: 2018−05−16	**Rev: 0.4**
KiCad E.D.A. kicad 4.0.7		Id: 1/1