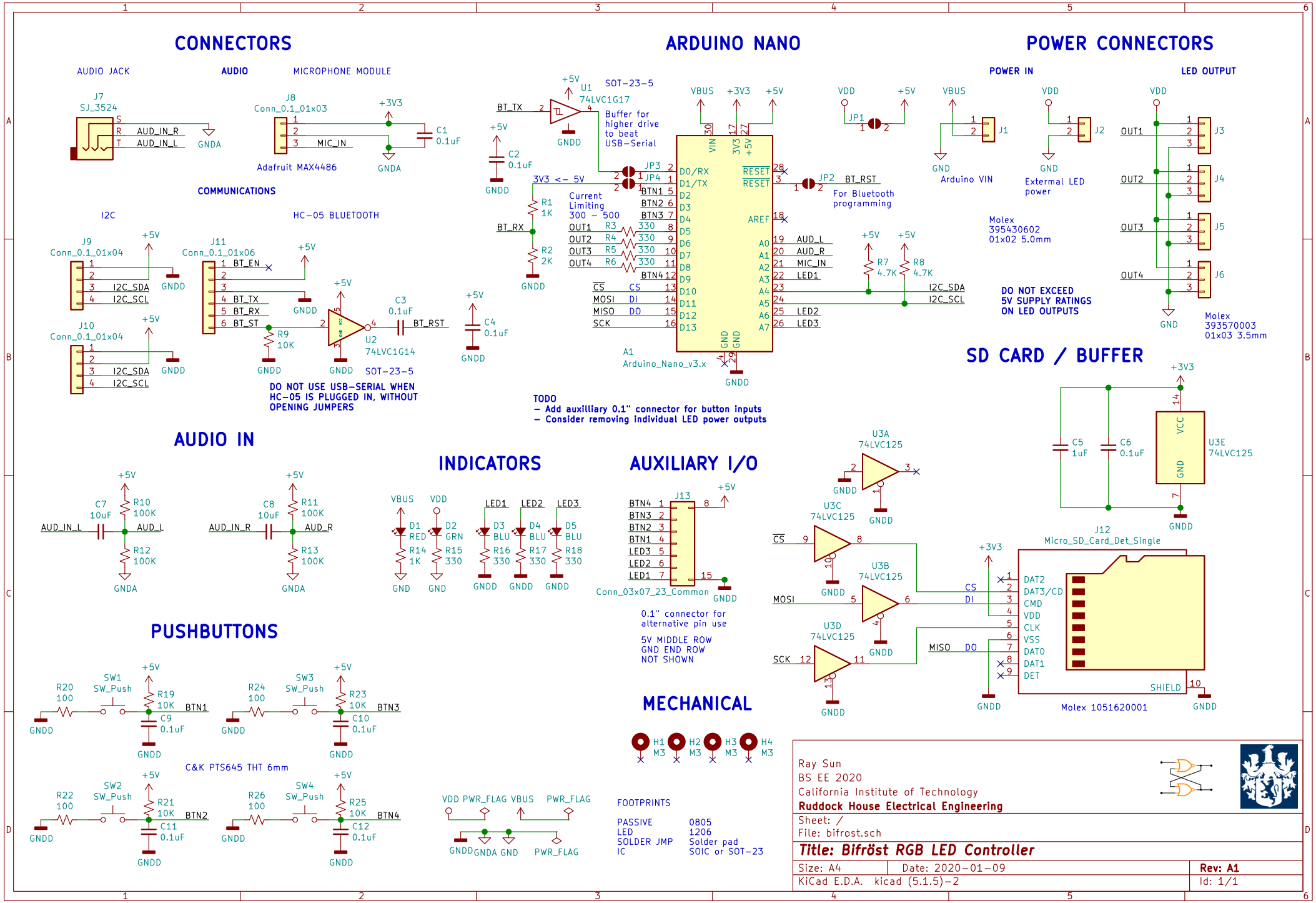
CONNECTORS
AUDIO JACK
AUDIO
MICROPHONE MODULE
J7
SJ_3524
AUD_IN_R
AUD_IN_L
GNDA
J8
Conn_0.1_01x03
MIC_IN
+3V3
C1
0.1uF
Adafruit MAX4486
COMMUNICATIONS
I2C
HC-05 BLUETOOTH
J9
Conn_0.1_01x04
I2C_SDA
I2C_SCL
GNDD
J10
Conn_0.1_01x04
J11
Conn_0.1_01x06
BT_EN
BT_TX
BT_RX
BT_ST
R9
10K
U2
74LVC1G14
SOT-23-5
C3
0.1uF
BT_RST
C4
0.1uF
DO NOT USE USB-SERIAL WHEN
HC-05 IS PLUGGED IN, WITHOUT
OPENING JUMPERS
ARDUINO NANO
U1
74LVC1G17
SOT-23-5
Buffer for
higher drive
to beat
USB-Serial
C2
0.1uF
3V3 <- 5V
R1
1K
R2
2K
Current
Limiting
300 - 500
JP3
JP4
BTN1
BTN2
BTN3
BTN4
OUT1
OUT2
OUT3
OUT4
R3
R4
R5
R6
330
CS
MOSI
MISO
SCK
DI
DO
D0/RX
D1/TX
D2
D3
D4
D5
D6
D7
D8
D9
D10
D11
D12
D13
VIN
3V3
+5V
RESET
AREF
A0
A1
A2
A3
A4
A5
A6
A7
AUD_L
AUD_R
MIC_IN
LED1
LED2
LED3
I2C_SDA
I2C_SCL
JP1
JP2
BT_RST
For Bluetooth
programming
R7
4.7K
R8
4.7K
A1
Arduino_Nano_v3.x
TODO
- Add auxilliary 0.1" connector for button inputs
- Consider removing individual LED power outputs
POWER CONNECTORS
POWER IN
LED OUTPUT
J1
Arduino VIN
J2
External LED
power
Molex
395430602
01x02 5.0mm
J3
J4
J5
J6
Molex
393570003
01x03 3.5mm
DO NOT EXCEED
5V SUPPLY RATINGS
ON LED OUTPUTS
SD CARD / BUFFER
U3E
74LVC125
C5
1uF
C6
0.1uF
VCC
GND
U3A
74LVC125
U3B
74LVC125
U3C
74LVC125
U3D
74LVC125
J12
Micro_SD_Card_Det_Single
DAT2
DAT3/CD
CMD
VDD
CLK
VSS
DAT0
DAT1
DET
SHIELD
Molex 1051620001
AUDIO IN
C7
10uF
R10
100K
R12
100K
AUD_IN_L
AUD_L
C8
10uF
R11
100K
R13
100K
AUD_IN_R
AUD_R
INDICATORS
VBUS
VDD
D1
RED
R14
1K
D2
GRN
R15
330
LED1
LED2
LED3
D3
BLU
R16
330
D4
BLU
R17
330
D5
BLU
R18
330
AUXILIARY I/O
J13
Conn_03x07_23_Common
0.1" connector for
alternative pin use
5V MIDDLE ROW
GND END ROW
NOT SHOWN
PUSHBUTTONS
SW1
SW_Push
R20
100
R19
10K
C9
0.1uF
BTN1
SW3
SW_Push
R24
100
R23
10K
C10
0.1uF
BTN3
C&K PTS645 THT 6mm
SW2
SW_Push
R22
100
R21
10K
C11
0.1uF
BTN2
SW4
SW_Push
R26
100
R25
10K
C12
0.1uF
BTN4
VDD PWR_FLAG VBUS PWR_FLAG
GNDD GNDA GND PWR_FLAG
MECHANICAL
H1
M3
H2
M3
H3
M3
H4
M3
FOOTPRINTS
PASSIVE 0805
LED 1206
SOLDER JMP Solder pad
IC SOIC or SOT-23
Ray Sun
BS EE 2020
California Institute of Technology
Ruddock House Electrical Engineering
Sheet: /
File: bifrost.sch
Title: Bifröst RGB LED Controller
Size: A4
Date: 2020-01-09
Rev: A1
KiCad E.D.A. kicad (5.1.5)-2
Id: 1/1