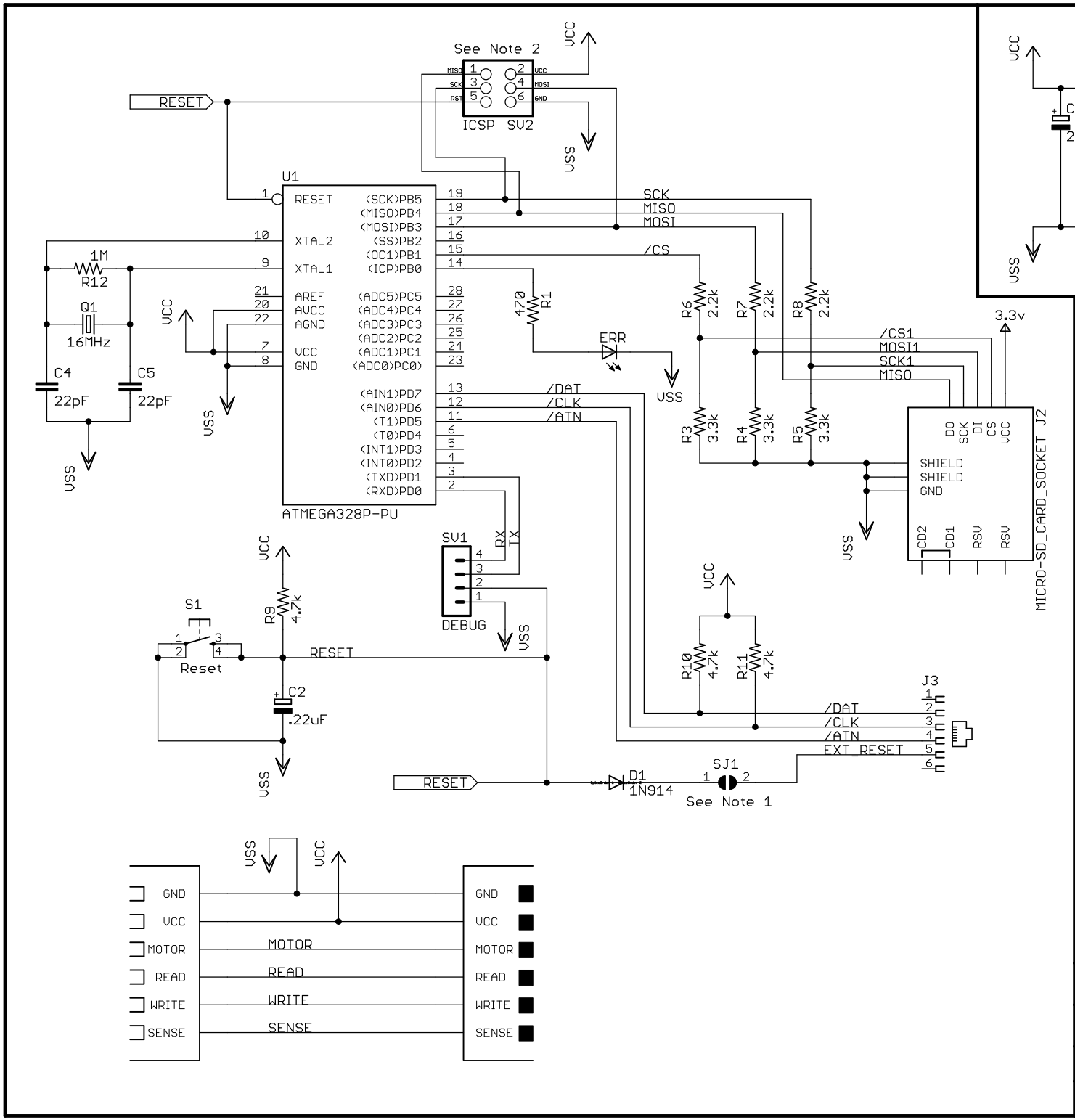

Power Supply

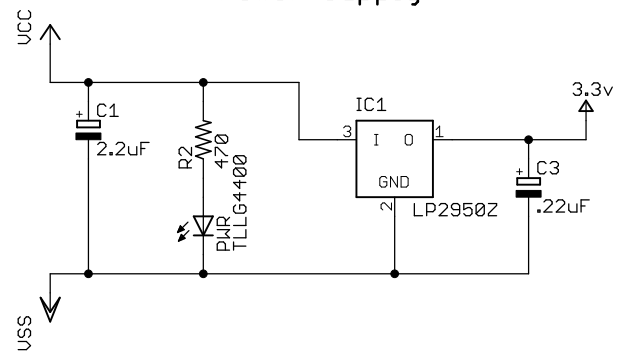

Notes:

1. Solder these pads together to cause the controler to reset when the computer resets (Manual resets are still possible, but they will not reset the computer). Leave open for manual reset only.

2. When using the ICSP port, make sure to remove the SD card from the socket to prevent damage to the card.

Created By: Electronics Tinkerer

ATMEGA328 Based CBM Drive Emulator

REV: 1.1

SHEET: 1 / 1

DATE: Jan 27, 2018