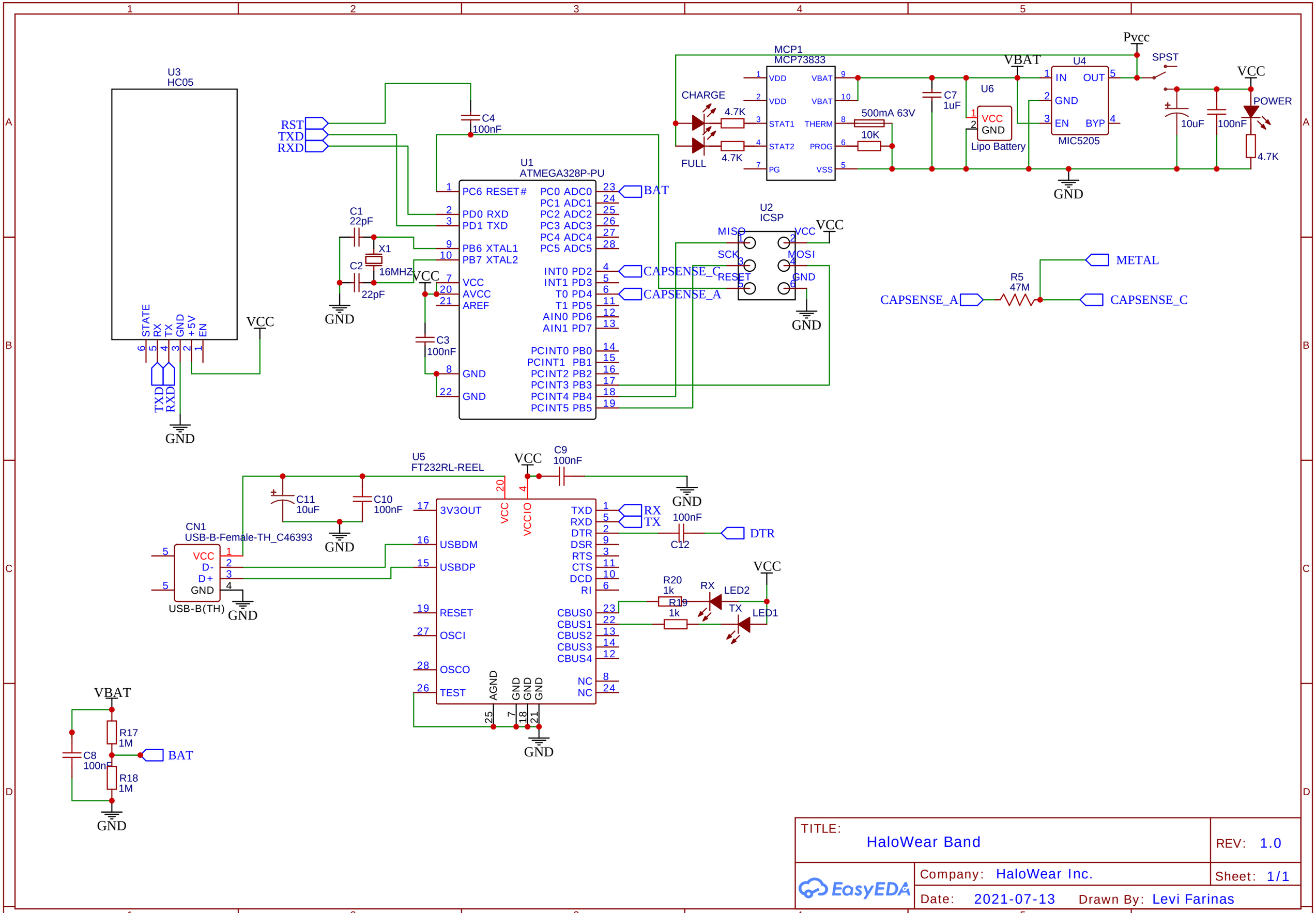

TITLE: HaloWear Band	REV: 1.0
Company: HaloWear Inc.	Sheet: 1/1
Date: 2021-07-13 Drawn By: Levi Farinas	