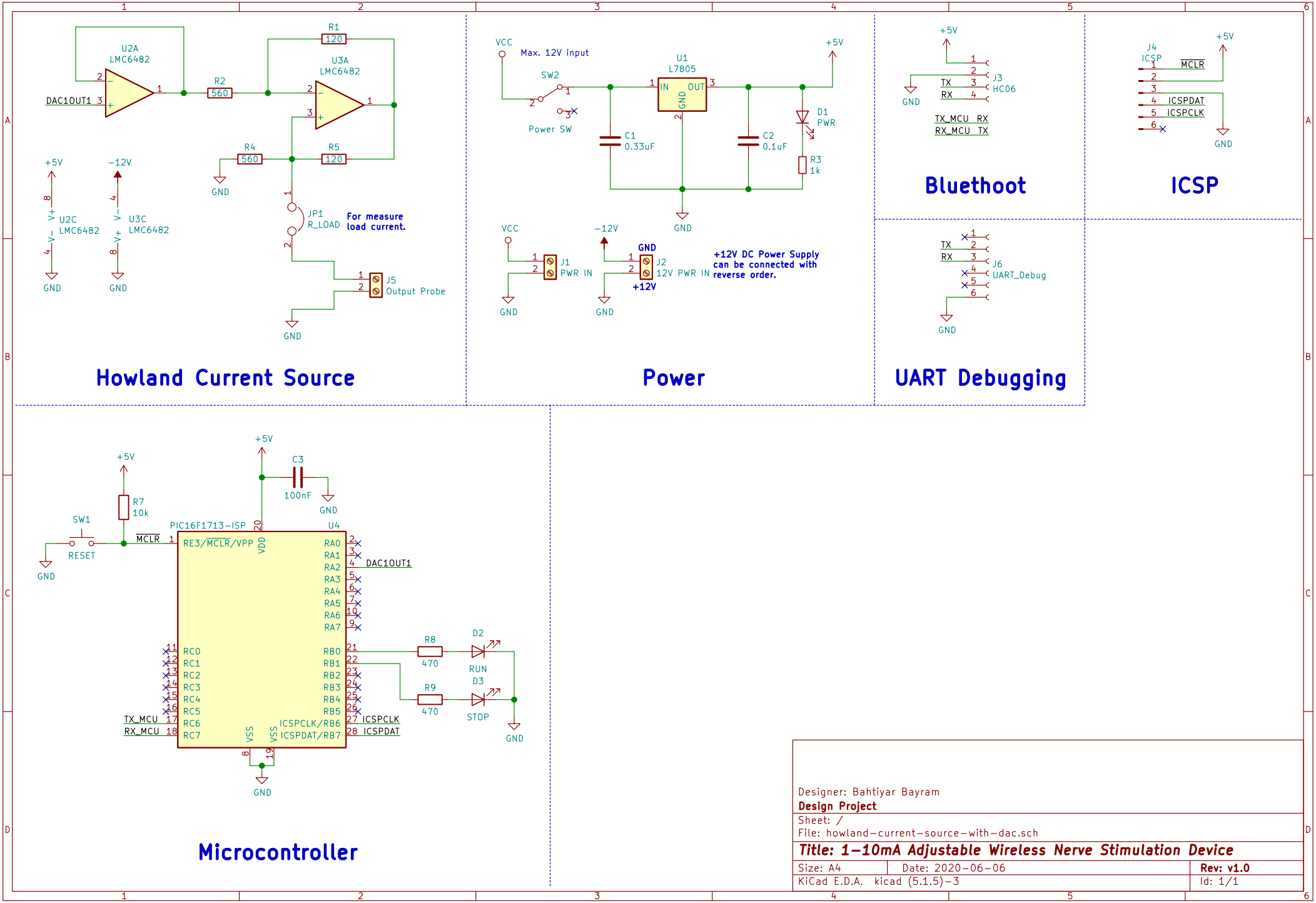
U2A
LMC6482
DAC1OUT1
R2
560
R1
120
U3A
LMC6482
R4
560
R5
120
GND
+5V
−12V
U2C
LMC6482
U3C
LMC6482
JP1
R_LOAD
For measure load current.
J5
Output Probe
Howland Current Source
VCC
Max. 12V input
SW2
Power SW
U1
L7805
IN
OUT
GND
C1
0.33uF
C2
0.1uF
D1
PWR
R3
1k
J1
PWR IN
J2
12V PWR IN
+12V
+12V DC Power Supply can be connected with reverse order.
Power
J3
HC06
TX
RX
TX_MCU RX
RX_MCU TX
Bluethoot
J4
ICSP
MCLR
ICSPDAT
ICSPCLK
ICSP
J6
UART_Debug
UART Debugging
R7
10k
SW1
RESET
MCLR
C3
100nF
PIC16F1713-ISP
U4
RE3/MCLR/VPP
VDD
VSS
RA0
RA1
RA2
RA3
RA4
RA5
RA6
RA7
DAC1OUT1
RC0
RC1
RC2
RC3
RC4
RC5
RC6
RC7
TX_MCU
RX_MCU
RB0
RB1
RB2
RB3
RB4
RB5
ICSPCLK/RB6
ICSPDAT/RB7
ICSPCLK
ICSPDAT
R8
470
R9
470
D2
RUN
D3
STOP
Microcontroller
Designer: Bahtiyar Bayram
Design Project
Sheet: /
File: howland-current-source-with-dac.sch
Title: 1-10mA Adjustable Wireless Nerve Stimulation Device
Size: A4
Date: 2020-06-06
Rev: v1.0
KiCad E.D.A. kicad (5.1.5)-3
Id: 1/1