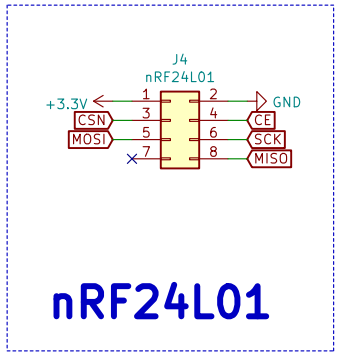

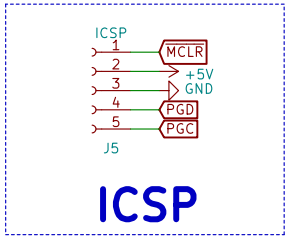

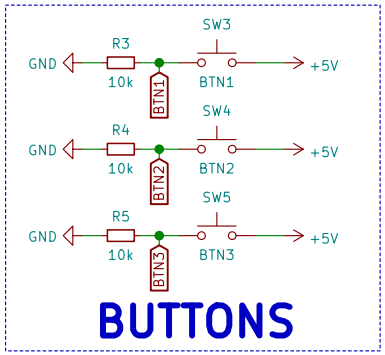

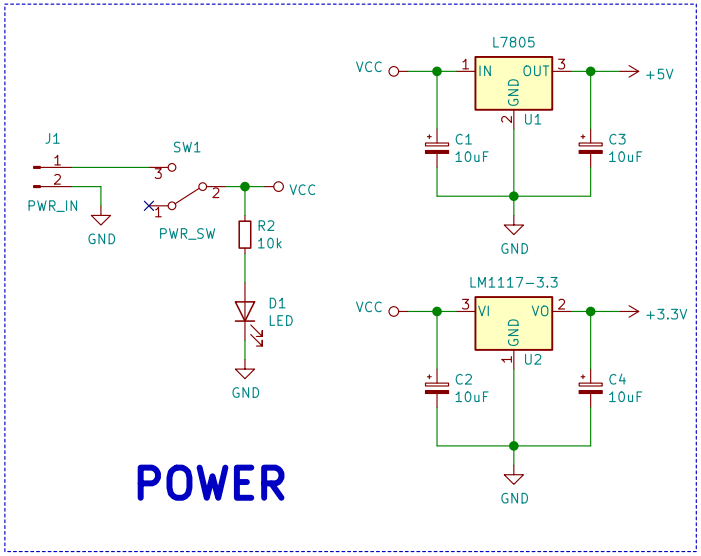

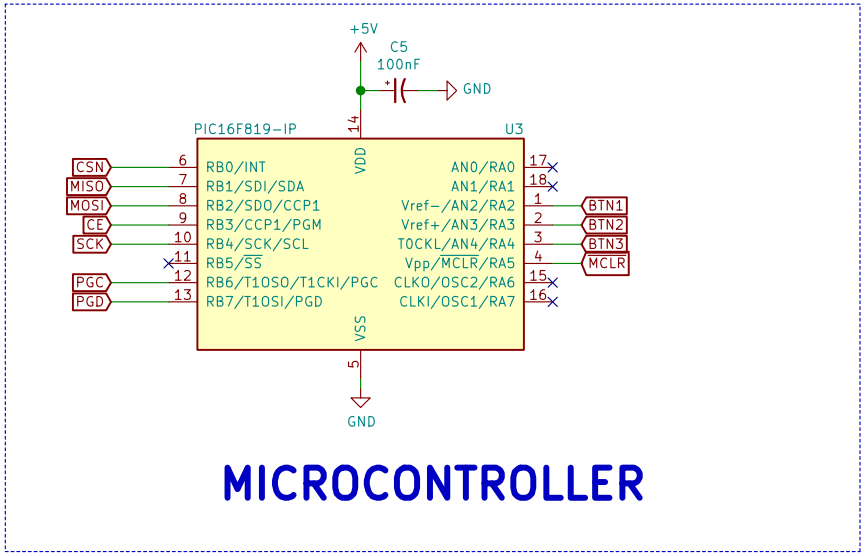

Released under the Creative Commons
Attribution-ShareAlike 4.0 International
https://creativecommons.org/licenses/by-sa/4.0/
Designer: Bahtiyar Bayram

Sheet: /
File: PIC16F819-nRF24L01-TX.sch

Title: nRF24L01 Communication - Transmitter

Size: A4	Date: 2019-05-14	Rev: v1.0
KiCad E.D.A. kicad (5.1.2)-1		Id: 1/1