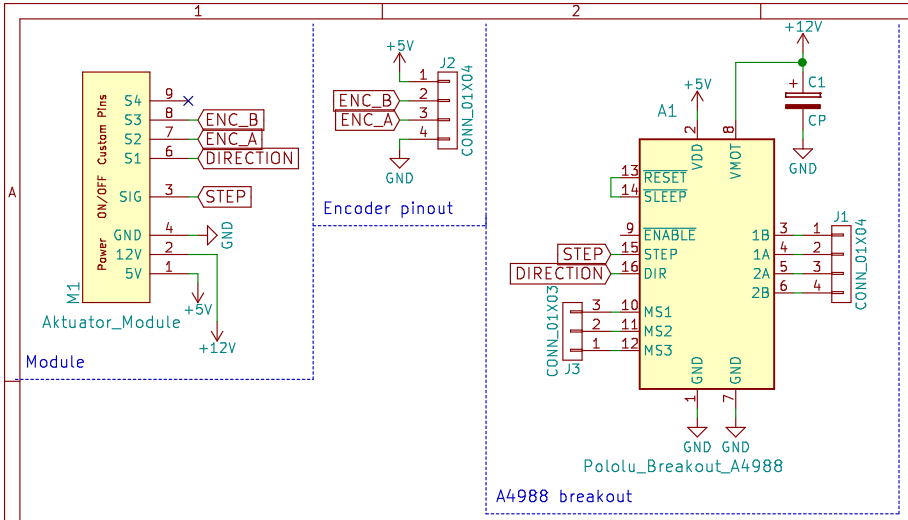

Suggested for:
M1, M2 & M3, because of the 4 pin support.
Can use M4 (with 3 pins) but can't use encoder

Electropioneer		
Sheet: / File: AM_Stepper.sch		
Title: Actuator – Module A4988		
Size: A4	Date: 2018-02-08	**Rev: 1.0**
KiCad E.D.A. kicad 4.0.6+dfsg1-1		Id: 1/1