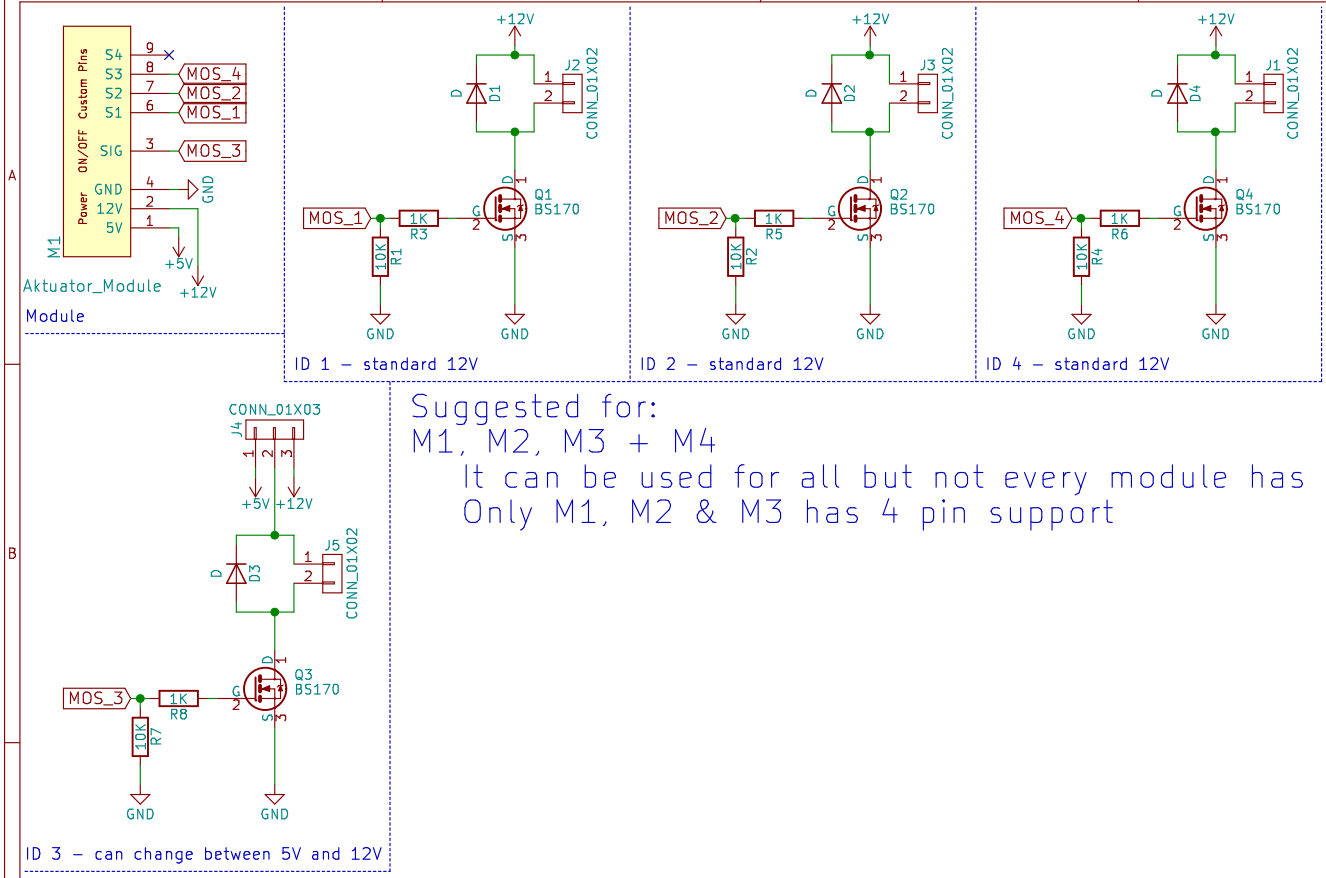


Suggested for:
M1, M2, M3 + M4
It can be used for all but not every module has 4 pins support
Only M1, M2 & M3 has 4 pin support

**Electropioneer**

Sheet: /
File: AM_Mosfet.sch

***Title: Actuator – Mosfet Module***

| | | |
|---|---|---|
| Size: A4 | Date: 2018-02-08 | **Rev: 1.1** |
| KiCad E.D.A. kicad 4.0.6+dfsg1-1 | | Id: 1/1 |