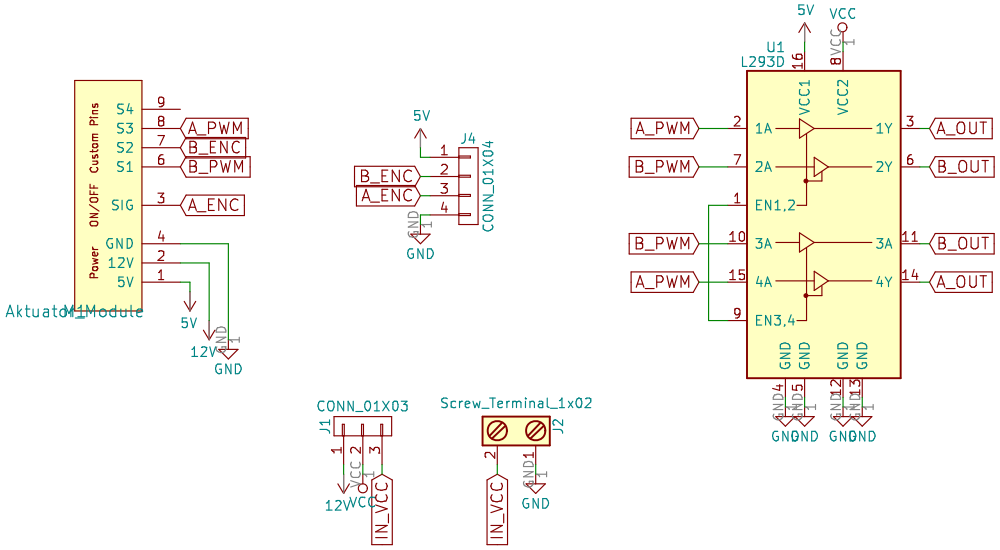

Electropioneer

Sheet: /

File: hbridge_l293d.sch

Title: L293D module

Size: A4	Date: 2018-03-19	**Rev: 1.0**
KiCad E.D.A. kicad 4.0.6+dfsg1-1		Id: 1/1