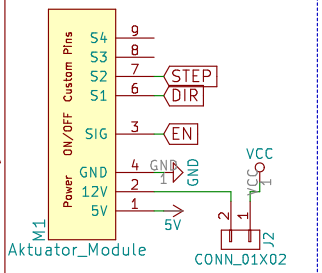


Module

Suggested for:
M1, M2, M3 & M4

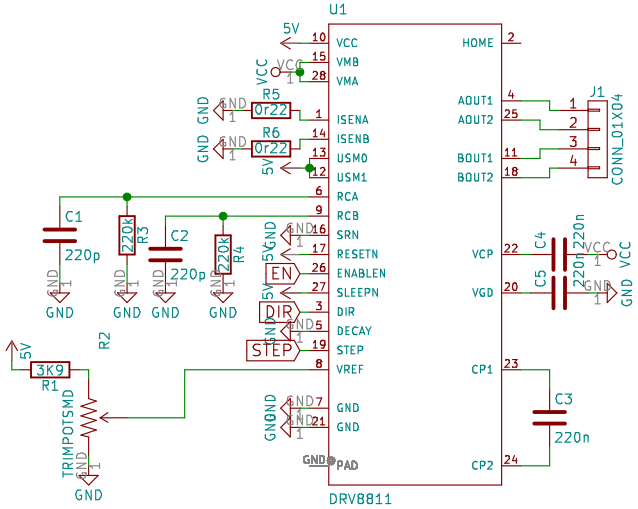


DRV881

**Electropioneer**

Sheet: /
File: AM_Stepper_DRV.sch

**Title: Actuator board – Module DRV8811**

| | | |
|---|---|---|
| Size: A4 | Date: 2018-02-08 | **Rev: 1.0** |
| KiCad E.D.A. kicad 4.0.6+dfsg1-1 | | Id: 1/1 |