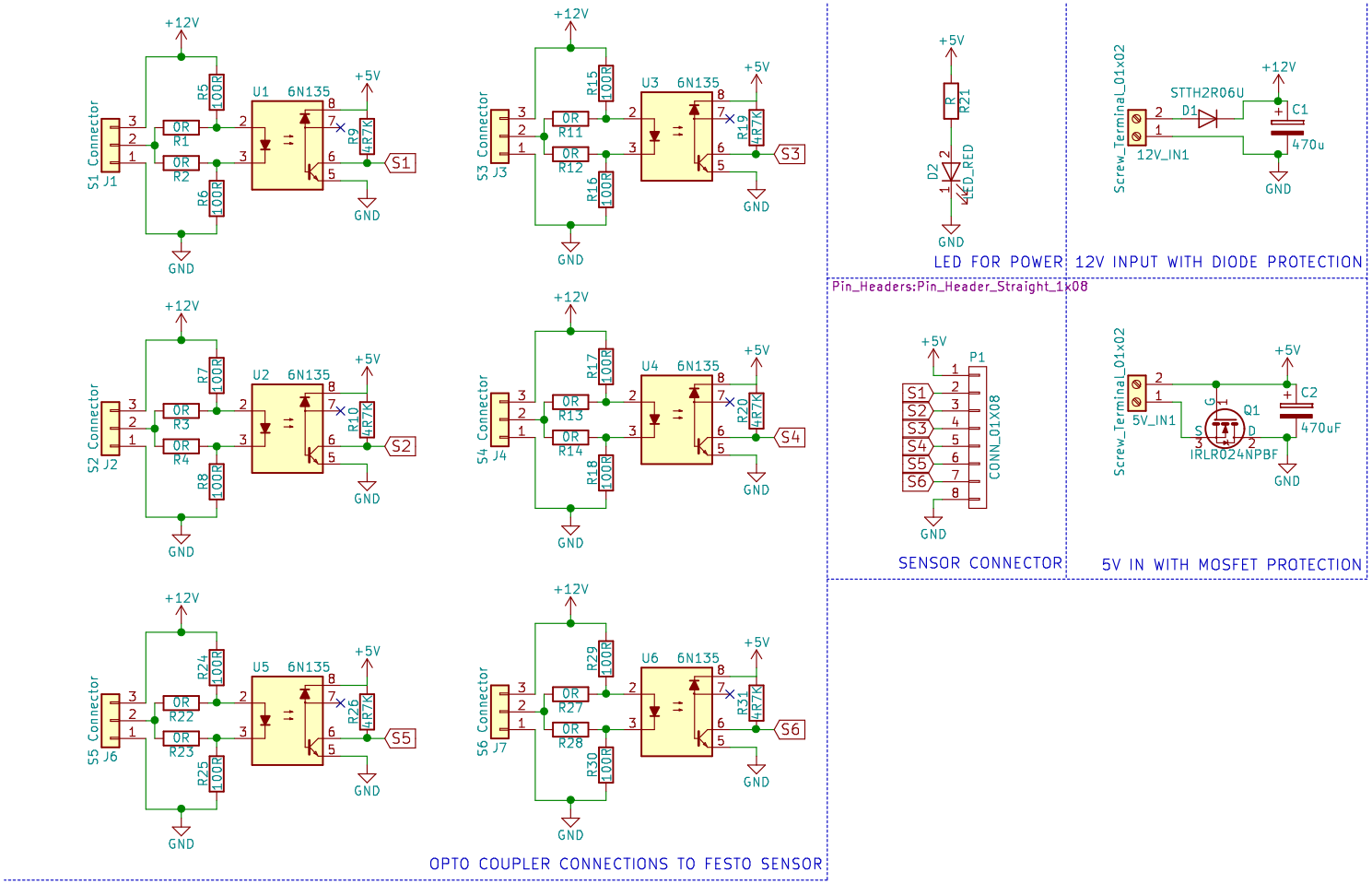


**Electropioneer**

Sheet: /

File: Optoboard.sch

***Title: Opto isolator board for festo sensors***

| | | |
|---|---|---|
| Size: A4 | Date: 2017-09-30 | **Rev: 1** |
| KiCad E.D.A. kicad 4.0.2+dfsg1-stable | | Id: 1/1 |