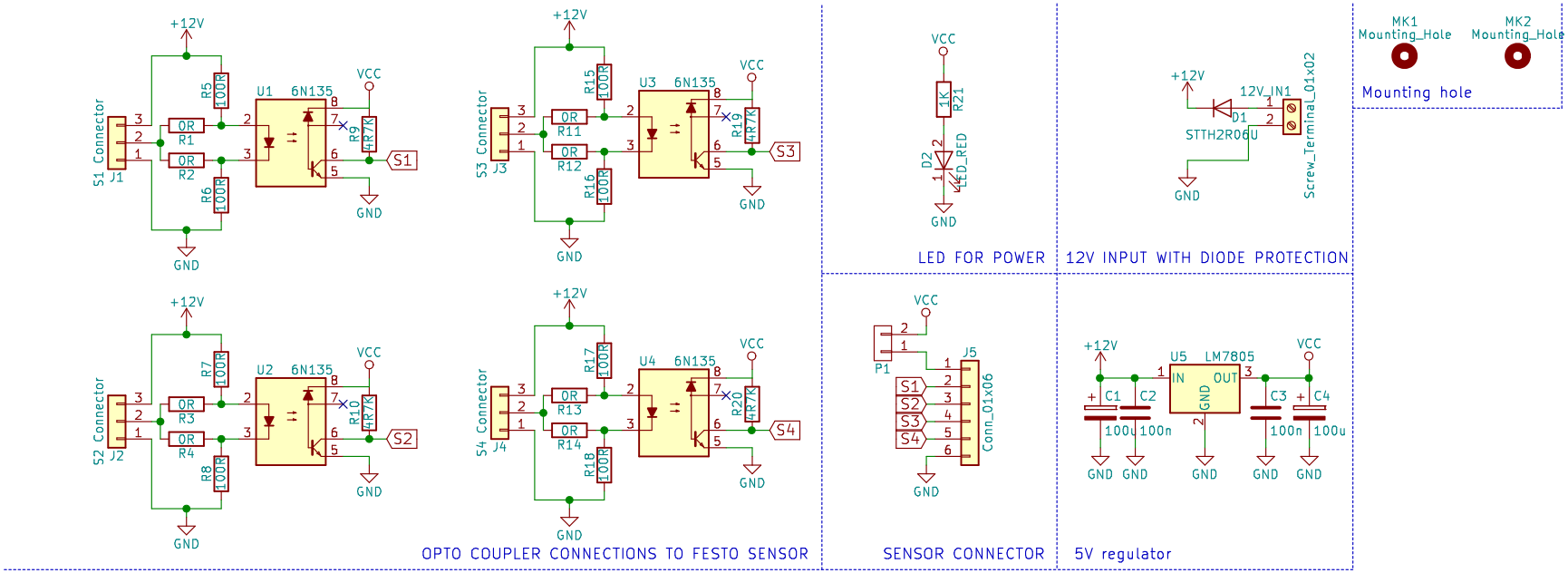

Electropioneer

Sheet: /

File: Optoboard.sch

Title: Opto isolator board for festo sensors

Size: A4	Date: 2018-02-10	**Rev: 1.1**
KiCad E.D.A. kicad 4.0.6+dfsg1-1		Id: 1/1