REVISION	
REV	DESCRIPTION
B	修改见图纸红色尺寸处部分,有原来的直径为2.85mm改为2.95mm

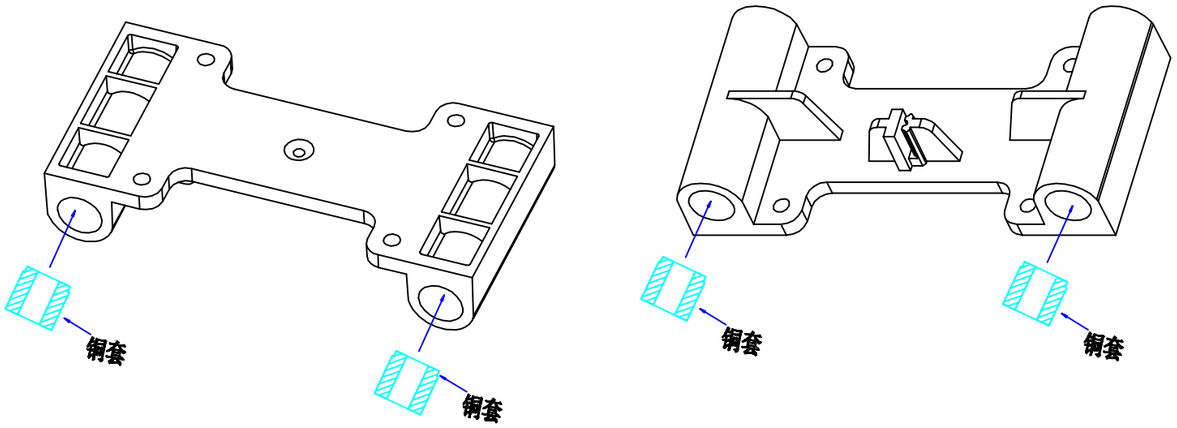

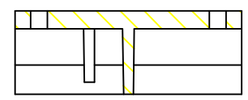

Section B-B

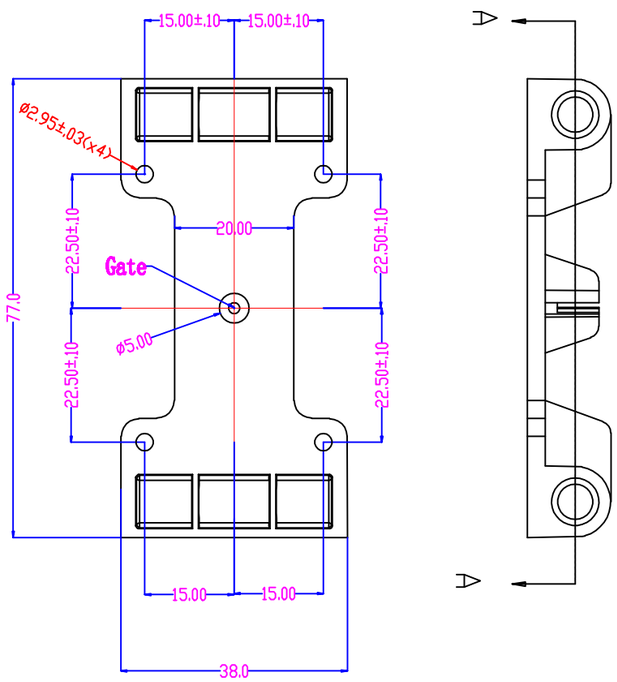

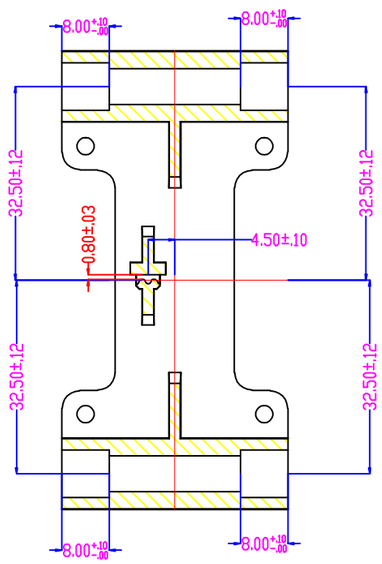

Section A-A

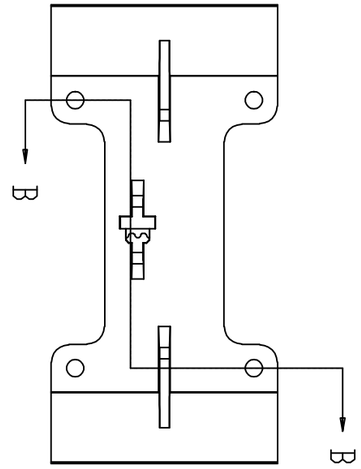

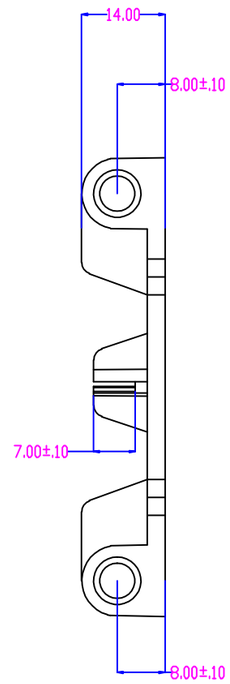

备注;
1. 铜套用量4ea.
2. 没注明公差按公差表计算.

MAKEOMNIA LIMITED	DRAWN	BZ HUANG	TITLE: Part D
UNLESS OTHERWISE SPECIFIED ALL DIMENSION ARE IN MILLIMETERS	CHECK	Parker LEUNG	
TOLERANCES: LINEAR .X±0.3 .XX±0.15 .XXX±XXX; ANGULAR ±1°; SURFACE ROUGHNESS 1.6	ENGR	Parker LEUNG	
THIRD ANGLE PROJECTION; BREAK ALL BURRS AND SHARP EDGES	MATERIAL: ABS 757	SIZE: A3	THIS INFORMATION IS CONFIDENTIAL AND PROPRETRY TO PS AND SHALL NOT BE REPRODUCED OR FURTHER DISCLOSED TO ANYONE OTHER THAN PS EMPLOYEES WITHOUT WRETIEN AUTHORIZATION FROM PACK SUCCESS INDUSTRIES LTD.
DO NOT SCALE DRAWING	FINISH	SCALE: N/A	DWG.NO. / REV. C / SHT 1 OF 1

FORMAT NO.: ME-FM107-C