Aristotle University of Thessaloniki

Faculty of Sciences

School of Informatics

MSc Data and Web Science

Weakly Supervised NER for Cardiology Using Multilingual Transformers

Eleonora Stoikopoulou

ID: 126

Supervisor: Grigorios Tsoumakas

December 17, 2025

Inscription

To Despoina, my friend who supported me from start to finish, with dedication and constant support.

With gratitude, Eleonora

Thanks to

First and foremost, I would like to thank my supervisor, Prof. Grigorios Tsoumakas, for his invaluable advice, continuous support, and patience during my thesis. His knowledge and attitude have encouraged me in my academic research. I would also like to thank my team, Alkis Kipouros and Axilleas Toumpas, for their technical support in my study.

Finally, I would like to express my gratitude to my parents and my friend Despoina. Without their encouragement, completing my study would have been considerably more challenging.

Abstract

The utilization of EHRs significantly enhances clinical research by providing semi-structured data. Despite the application of deep learning techniques for clinical NER and clinical coding in both English and Spanish, there remains a notable gap in the literature regarding applications focused on the domain of cardiology in the Greek language. This thesis aims to address this gap through three key objectives: firstly, the construction of a Greek annotated clinical dataset, consisting of discharge letters of hospitalized patients with cardiac conditions; secondly, the integration of additional information as contextual data in model training; and thirdly, the employment of multilingual and monolingual transformer models for weakly supervised Greek clinical entity recognition in order to be used for clinical coding.

Leveraging the unique structure of the given dataset, a technique is proposed wherein additional descriptions of clinical entities present in each discharge letter are concatenated into the input. Evaluation of the proposed method is conducted using three state-of-the-art models on the manually annotated Greek dataset, demonstrating successful handling of the complexities inherent in clinical NER. Furthermore, comparative analysis with simple NER highlights the efficacy of utilizing additional context to enhance model performance in recognizing clinical entities. Additionally, findings indicate that multilingual models outperform existing monolingual ones, underscoring the necessity for further research in the Greek language domain.

Keywords: Additional Context, Annotation, Cardiology, Clinical Coding, Discharge letters, EHRs, GreekBERT, ICD-10, Multilingual Transformers, mBERT, NER, Transformers, XLM-R, Weak-Supervision

Περίληψη

Η χρήση των EHRs ενισχύει σημαντικά την κλινική έρευνα με την παροχή ημιδομημένων δεδομένων. Παρά την εφαρμογή τεχνικών βαθιάς μάθησης για αναγνώριση κλινικών οντοτήτων και το clinical coding τόσο στην αγγλική όσο και στην ισπανική γλώσσα, παραμένει ένα αξιοσημείωτο κενό στη βιβλιογραφία όσον αφορά εφαρμογές που επικεντρώνονται στον τομέα της καρδιολογίας στην ελληνική γλώσσα. Η παρούσα διπλωματική εργασία αποσκοπεί στην αντιμετώπιση αυτού του κενού μέσω τριών βασικών στόχων: πρώτον, την κατασκευή ενός annotated ελληνικού συνόλου κλινικών δεδομένων, το οποίο αποτελείται από εξιτήρια νοσηλευθέντων ασθενών με καρδιακές παθήσεις, δεύτερον, την ενσωμάτωση πρόσθετων πληροφοριών ως μεταδεδομένων στην εκπαίδευση των μοντέλων και τρίτον, την αξιοποίηση πολύγλωσσικων και μονόγλωσσικων μοντέλων transformers για ασθενώς επιβλεπόμενη αναγνώριση κλινικών οντοτήτων στα ελληνικά, προκειμένου να χρησιμοποιηθούν για clinical coding.

Αξιοποιώντας την ιδιαίτερη δομή του συγκεκριμένου συνόλου δεδομένων, προτάθηκε μια τεχνική κατά την οποία πρόσθετες περιγραφές κλινικών οντοτήτων που υπάρχουν σε κάθε εξιτήριο νοσηλευθέντων ασθενών παρατίθενται στην είσοδο. Η αξιολόγηση της προτεινόμενης μεθόδου διεξάγεται με τη χρήση τριών μοντέλων αιχμής στο χειροκίνητα annotated ελληνικό σύνολο δεδομένων, αποδεικνύοντας τον επιτυχή χειρισμό της πολυπλοκότητας που ενυπάρχει στην αναγνώριση κλινικών οντοτήτων. Επιπλέον, η συγκριτική ανάλυση με την απλή αναγνώριση κλινικών οντοτήτων αναδεικνύει την αποτελεσματικότητα της χρήσης πρόσθετης πληροφορίας για την ενίσχυση της απόδοσης του μοντέλου. Τέλος, τα ευρήματα δείχνουν ότι τα πολύγλωσσικα μοντέλα υπερτερούν των υφιστάμενων μονόγλωσσικων, υπογραμμίζοντας την ανάγκη για περαιτέρω έρευνα στον τομέα της ελληνικής γλώσσας.

Λέξεις κλειδιά: Αναγνώριση Κλινικών Οντοτήτων, Εξιτήρια νοσηλευθέντων, Επιπρόσθετη πληροφορία, Καρδιολογία, Πολυγλωσσικά Transformers, Annotation, Clinical Coding, EHRs, GreekBERT, ICD-10, mBERT, Transformers, XLM-R, Weak-Supervision

Contents

1 Introduction **10**

1.1 Motivation 10

1.2 Aim and Objectives 10

1.3 Key Open Challenges 11

1.4 Thesis Overview 12

2 Background **14**

2.1 Electronic Health Records 14

2.1.1 Historical Overview 14

2.1.2 Current Trends 15

2.1.3 EHRs in the Greek Healthcare System 16

2.2 Clinical Coding 18

2.2.1 Healthcare Data Classification Applications 19

2.2.2 Clinical Coding Classification Systems 20

2.2.3 Challenges 25

2.3 Clinical Text Annotation 28

2.3.1 Name Entity Recognition 30

2.3.2 Challenges 31

2.3.3 Model Assessment 33

2.4 Transformers 35

2.4.1 Architecture Overview 35

2.4.2 Transformers in Health Domain 37

2.4.3 Multilingual Transformers 39

3 Related Work **41**

3.1 Scope of the literature Review 41

3.2 Shared tasks and Datasets for Clinical Text 42

3.2.1 Shared tasks 42

3.2.2 Datasets 43

3.3 Applications 45
3.3.1 BERT-Based Models 45
3.3.2 Multilingual Transformers 48
3.3.3 Biomedical NER with Multilingual Transformers 49

4 Idea and Approach **55**
4.1 Methodology 55
4.2 Adaptation and Integration 55
4.3 Expected Outcomes 56

5 Implementation and Experimentation **57**
5.1 Data Collection 57
5.1.1 Origin and Specifics of the Dataset 57
5.1.2 Prepossessing and Anonymization 59
5.2 Annotation process 61
5.2.1 Annotation tool selection 61
5.2.2 Integration of annotations 64
5.3 Final Dataset Summary 66
5.4 Splitting 68
5.4.1 Sections 69
5.4.2 Sentences 69
5.5 Model Deployment 70
5.5.1 Construction of Inputs 70
5.5.2 Fine-tuning 71

6 Results and Discussion **74**
6.1 Results 74
6.1.1 Models without descriptions 74
6.1.2 Models with descriptions 75
6.1.3 Models with descriptions versus models without descriptions 75
6.2 Discussion 76

7 Conclusions and Future Work **77**
7.1 Conclusions 77
7.2 Future Work 77

List of Figures

2.1 Trends in U.S Hospital & Physician EHR Adoption 16
2.2 Illustration of concept of monohierarchy and polyhierarchy 21
2.3 The Transformer architecture. 36

5.1 Extra labels distribution 68
5.2 Direct matching of extra labels in text 68

List of Tables

2.1 ICD-10 Chapters and Titles 24

3.1 Clinical NLP annual Workshops 42
3.2 Publicly available corpora as shared tasks 42
3.3 Cross lingual Evaluation benchmarks 43
3.4 Monolingual clinical NLP evaluation corpora 44
3.5 Clinical and Biomedical NLP Databases and Search Engines 46

5.1 Examples of metadata in EHRs 59
5.2 Sections in Texts 60
5.3 Anonymization Keywords and Examples 61
5.4 Evolution of Document Files 61
5.5 Size of Final Dataset Splits 67
5.6 EHR-wise Annotation Statistics 67
5.7 Section Split Statistics 69
5.8 Sentence Split Statistics 69
5.9 Thresholds and Lengths in mBERT, XLM-R, and GreekBERT 70
5.11 Comparison of Tokenization Output 71
5.10 Input format mBERT train example 72
5.12 Hyper-parameter Values for Fine-Tuning 73

6.1 Model's best parameters 74
6.2 Final model results 74
6.3 Model results for mBERT_no_extra, XLM-R_no_extra and GreekBERT_no_extra 75
6.4 Model results for mBERT, XLM-R and GreekBERT 75
6.5 Comparison of models with and without Descriptions 76

List of Algorithms

1 Handling Spans of Annotations 65
2 Handling Differences in Annotations 66
3 Constructing Formatted Input for BERT models for train set 71

Chapter 1

Introduction

1.1 Motivation

Recent breakthroughs in the field of multilingual clinical natural language processing have been motivated by the capabilities of multilingual transformers, particularly BERT-based transformers. Many models, such as ClinicalBERT, BioBERT, and BERT-XML, have shown significant performance in breaking down English clinical written work. Despite their extensive use, a gap in the literature remains, specifically the restricted study of such models in the context of the Greek language.

The motivation for this thesis originates from the necessity to fill this void and expand the applicability of multilingual transformer models to the complexities of the Greek clinical narrative. The Greek language, like any other language with different roots than English, presents distinct obstacles that require a specific approach. Zero-shot learning, although an ambitious goal, presents substantial barriers. Because Greek is distinct in terms of syntax and semantics, blindly applying pre-trained models to this language without further adjustments will result to less optimal outcomes. In this endeavor, the need for a specialized Greek dataset becomes evident, since relying just on zero-shot or few-shot learning would probably be ineffective in capturing the language's complexity.

Moreover, it should be noted that obtaining Greek datasets, especially within the clinical sector, presents numerous challenges. While these datasets are not entirely absent, their availability is limited. Additionally, the discovered datasets often exist in raw form, requiring extensive pre-formatting to align with the specific needs of clinical natural language processing. Despite these challenges, the presence of these datasets is a useful resource, providing a chance to progress the adaptation of such models to the specifics of Greek clinical narratives.

1.2 Aim and Objectives

This thesis is designed to achieve three key objectives:

1. **Construction of a Greek Annotated Clinical Dataset** The first aim is to format available electronic health record data from "PAPANIKOLAOU", a tertiary hospital in Greece, to generate an original Greek clinical dataset. This objective is the product of a collaboration involving two other researchers, Alkis Khpouros and Axilleas Toumpas. The dataset, derived from the cardiology sector, has a plethora of discharge letters, allowing for a thorough picture of patient histories in this medical area. Our team picked a subset of patient records from this dataset to be annotated with ICD-10 codes by specialists. This annotation enabled us to undertake trials for both XAI and clinical coding tasks, allowing us to take advantage of the enriched dataset for our project.

   Although the dataset is particularly used for clinical entity recognition in this thesis, it is important to note that the final goal, which includes clinical coding, is addressed within the larger framework of this investigation. This thesis thus gives insights not just on clinical NER but also a basic yet instructive look at clinical coding.

2. **Incorporation of Extra Information in Model Training**

   The second goal is to include additional data in the model's training. The intention is to improve model performance by using the additional contextual information accessible in our electronic health records.

3. **Fine-tuning of Multilingual Transformer Models and comparing them with the available monolingual Greek models**

   Additionally, the aim is to fine-tune multilingual transformer models such as mBERT and XLM-R that support the Greek language. Notably, a comparative analysis is conducted with GreekBERT, the only known available Greek transformer model to date. The purpose of fine-tuning these models is to improve their performance for NER in the Greek clinical setting.

1.3 Key Open Challenges

The landscape of clinical natural language processing in the Greek language presents major challenges, mostly due to the lack of available data. For that reason, limited attempts have been made to construct monolingual models or to fine-tune multilingual models specifically tailored to the Greek biomedical domain. This difficulty is also heightened by the intrinsic complexity of biomedical entity recognition in comparison with other domains.

In addition to the inherent complexity of low-resource languages, our thesis presents a new open challenge. This challenge revolves around the distinctive nature of the dataset.

Specifically, the inclusion of document-level descriptions of existing entities within each patient document marks a unique characteristic. This distinct feature introduces a novel challenge, demanding innovative methodologies for effective named entity recognition.

1.4 Thesis Overview

The thesis consists of five additional chapters. In Chapter 2, background information is provided about the evolution and use of electronic health records in hospitals, clinical coding, and clinical text annotation, with an emphasis on NER. It also contains an overview of transformers. In Chapter 3, information about benchmarks and shared tasks in multilingual clinical NER, along with related research, is discussed. Chapter 4 acts as an introduction to Chapter 5, and Chapter 5 describes the dataset preparation and methods used to train and evaluate our chosen models. Finally, Chapter 6 is dedicated to discussing the obtained results.

List of used abbreviations and acronyms

AHFY	Ατομικός Ηλεκτρονικός Φάκελος Υγείας
AMKA	Αριθμός Μητρώου Κοινωνικής Ασφάλισης
BERT	Bidirectional Encoder Representations from Transformers
BIES	Beginning-Inside-Ending-Single (Token)
CDA	Clinical Document Architecture
CDSS	Clinical Decision Support System
CLS	Classification Token
CM	Clinical Modification
EHR	Electronic Health Record
EOPYY	Εθνικός Οργανισμός Παροχής Υπηρεσιών Υγείας
eRDV	Ηλεκτρονικα Ραντεβου
FHIR	Fast Healthcare Interoperability Resources
GEM	General Equivalence Mapping
HL7	Health Level Seven International
HIM	Health Information Management
IDIKa	Ηλεκτρονική Διακυβέρνηση Κοινωνικής Ασφάλισης
ICD	International Classification of Diseases
IO	Inside-Outside
IOB	Inside-Outside-Beginning
IOBES	Inside-Outside-Beginning-Ending-Single
LM	Language Model
MLM	Masked Language Model
NCPeH	National Contact Point for e-Health
NEL	Name Entity Linking
NER	Name Entity Recognition
NHS	National Health Service
NLP	Natural Language Processing
NLI	Natural Language Inference
NSP	Next Sentence Prediction
ONC	Office of the National Coordinator
PCS	Procedure Coding System
POS	Part-of-Speech
QA	Question Answering
SEP	Separation Token
TLM	Translation Language Model

Chapter 2

Background

2.1 Electronic Health Records

One of the foundational elements of reporting in hospitals is the use of electronic health records. Both public and private hospitals use them consistently to accurately report all relevant information regarding a patient's health. The Healthcare Information and Management Systems Society accurately defines them as follows: "The Electronic Health Record (EHR) is a secure, real-time, point-of-care, patient-centric information resource for clinicians. The EHR aids clinicians' decision-making by providing access to patient health record information when they need it and incorporating evidence-based decision support. The EHR automates and streamlines the clinician's workflow, ensuring all clinical information is communicated and ameliorates delays in response that result in delays or gaps in care. The EHR also supports the collection of data for uses other than clinical care, such as billing, quality management, outcome reporting, and public health disease surveillance and reporting." [1]

2.1.1 Historical Overview

The historical evolution of EHRs has been outlined by Evans in 2016 [2]. Healthcare professionals started a systematic process of recording patient data in the early 1990s. They began as notes on paper, arranged in folders at each hospital, and primarily produced for usage within that particular hospital or healthcare facility. Initially called medical records or medical charts, the practice later changed to "health records" because it was at some point expected to include information about the patients' lifestyles along with their episodic medical encounters.

As technology advanced in the 1960s and 1970s, a significant shift towards electronic health records began. Academic hospitals were the first to use medical records in electronic form; over time, they went from sporadically using them to regularly incorporating them. Despite the fact that initially EHRs necessitated regular nightly backups due to financial and

physical limitations, this early investment and acceptance of technology laid the groundwork for a crucial resource in healthcare: a thorough and organized database.

Despite the promise of a digital future, the idea of replacing the complete paper chart with an electronic record was seen as hard due to the high initial expenses, leading to the idea that only important data should be computerized [3]. Even so, some professionals questioned whether the productivity improvements from electronic health records would justify the significant expenses involved, expressing doubt on the idea of a fully digitized system. Maximizing the use of already-existing paper records could provide a more affordable alternative to the digital revolution, according to skeptics [4].

2.1.2 Current Trends

Following initial reservations, the healthcare industry has gradually come to appreciate the significance and novel potential of electronic health records. It was rightfully predicted that once EHRs could be interoperable, their actual significance would become more apparent. After this, the advantages were, in fact, finally recognized in relation to costs.

More precisely, Health Level Seven International (HL7), Clinical Document Architecture (CDA), and the current standard, Fast Healthcare Interoperability Resources (FHIR), were utilized to attain EHR data standardization and interoperability in 1987, the early 2000s, and since 2014. FHIR is currently regarded as the most prominent and progressive standard. However, HL7 and CDA are still widely used, particularly in older software and in situations where FHIR may not yet have gained broad acceptance or incorporation. The specific requirements of a given project or healthcare organization are frequently taken into consideration when deciding which standard to adopt. Further discussion of the standards (HL7, CDA, and FHIR) in depth is outside the purview of this thesis.

The use of semantic and format standards was advantageous. The Office of the National Coordinator for Health Information Technology (ONC) made a significant observation about the past decade when it reported, as of 2021, that 78% of U.S office-based physicians used an EHR system, and U.S hospitals adopted certified EHRs at a rate that increased from 9.4% in 2008 to 96% in 2021 [5]. Furthermore, with a 51% rise since 2017, more than 6 out of 10 U.S hospitals used electronic health information sharing (send, receive, query) and integrated summary of care records into EHRs in 2021 [6].

EHRs are now the complete hospital experience for a patient. They keep track of everything, including changes in health, medical history, and diagnoses, as well as prescription medications, the progression of symptoms, and post-op or post-discharge instructions. Be-

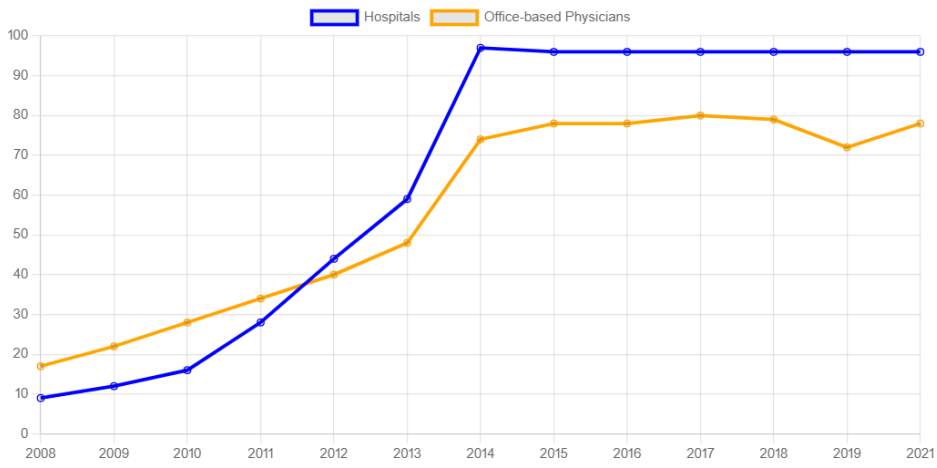

Figure 2.1: Trends in U.S Hospital & Physician EHR Adoption

cause of standardization, less repetitive writing, and improved communication among healthcare workers and their patients, the adoption of EHRs has sped up work by a significant amount of time each day [7]. For instance, when a patient's medical history has been documented, they typically no longer need to laboriously narrate it to every new doctor and have the same information transcribed by them. Additionally, patients are able to access their own data more easily, improving their interaction with their providers [7]. A descriptive EHR allows for the effective sharing of adequate information to explain past treatments, drugs, allergies, and diagnoses in a coherent manner. Due to the abundance of materials available, patients can also become more knowledgeable about their health.

EHR advancement has generally improved patient care and research. EHRs are now essential to providing patients with the best treatment possible, but they are also at the center of medical research.

2.1.3 EHRs in the Greek Healthcare System

Even though EHRs have been around since 1960, their implementation is moving slowly, particularly in less technologically advanced countries. This is because they are so intricate. EHR systems are expensive, complex, and need extensive interaction with the current healthcare IT infrastructure. In addition, many still struggle to use EHRs in their daily practices and are resistant to system adoption, which makes using the EHRs even more difficult. In 2019, various eHealth services were proposed in Greece to control costs and improve services, including electronic prescriptions, dispensations, referrals, insurance status verification, reimbursements, appointments, and a business intelligence system for the Hellenic Ministry of Health [8]. Nevertheless, achieving uniform access to EHRs continued to be a major difficulty.

While the challenges of implementing EHRs were and continue to be significant, one approach that healthcare systems, including Greece, have adopted through the years to address them is the deployment of patient summaries as an initial step towards achieving comprehensive EHR systems. In this framework, the introduction of patient summaries signified the start of the establishment of Greece's EHR system. The responsibility for managing the patient summary system was entrusted to the private legal organization Social Insurance eGovernance -IDIKA[1], a role it continues to fulfill. This stage, however, was just designed to be a guide. To develop full EHRs, more data must be contributed later, and a large number of stakeholders must be included in this process.

As we focus on the attempts within the healthcare industry to develop and implement EHRs across the country, it becomes evident that many disjointed projects have been launched. Notably, insufficient efforts were made to develop and run electronic filing systems, which are software-based solutions for organising and retrieving digital documents and files, to serve as a foundation for the transition to EHRs, particularly when organisations, such as Greece, are transitioning from paper-based records to digital formats. The EPIRUS-Net [9] and HYGEIAnet [10] systems were the most significant. Concurrently, the healthcare system saw the growth of secure communication networks that enabled various healthcare facilities, including hospitals and primary care clinics, to link and offer insurance and medical services to a wider variety of locations.

Later, in 2017, the Greek National Health Service (NHS) responded to these advancements by implementing, although not mandatorily, the Electronic Health Record [11]. The EHR is now functioning within a nationwide network and is regulated by Greek Law 4486/2017 on Primary Health Care. Since this implementation is relatively new, not enough study has been done to fully evaluate the functional modifications and enhancements that are required. A number of obstacles have been identified, according to recent research by Lappa et al. [11]. These difficulties include low rates of utilization, a lack of integration into routine healthcare practices, problems with competence, and only mediocre levels of user satisfaction.

While Greece is currently in the early phases of implementing a comprehensive national EHR system, it is worth mentioning that most hospitals and healthcare institutions have taken individual measures to deploy their own information systems for quite some time now. Despite their diversity, these EHRs frequently adhere to particular standards and guidelines outlined in contracts or agreements. Although these guidelines are not strict, key aspects have been recommended, and some are even required by law. All Greek individuals are

[1] https://www.idika.gr

expected to have their social security number ("AMKA") incorporated as a unique identity for e-prescriptions and electronic health records, according to the most current National Report for Greece [12]. Furthermore, it is stated that the patient's EHR should contain a brief medical history, information on the patient's condition and clinical progress during treatment, as well as essential demographic details such as name, last name, father's name, gender, age, occupation, address, dates of medical visits, and results from clinical and paraclinical examinations.

Despite all of these advancements, Greece in 2022 placed only 26th in the use of EHRs and only 25th in the electronic interchange of clinical data among EU countries, according to an IOBE study[2] on digital health and real-world data. This indicates that Greece has a great deal of room to develop its electronic health systems.

2.2 Clinical Coding

Beginning to comprehend the value of EHRs and conducting research on their data enabled academics to identify a serious concern. The lack of a standardized way to define diseases, treatments, and health-related issues hindered research and the efficient management and utilization of health-care data. For instance, due to the fact that the same clinical item can be characterized in a number of ways, identical instances were often categorized differently. To address this critical gap, they devised clinical coding—a systematic way for effectively categorizing and representing medical information. In consistent terminology, groupings of synonymic clinical descriptors are designated under one code number.

Clinical coding is defined as the process of translating descriptions of healthcare services into a machine-readable formal language with the assistance of a clinician's interpretation of the text. Conversion to symbolic language includes its own set of rules for naming, hierarchy, and so on. Clinical coders (CCs), who are part of the health information management (HIM) team, are in charge of this transformation, which results in the creation of the vast majority of health data inside the HIM domain. But in practice, clinical coding goes beyond translation; it also includes the critical act of organizing and categorizing standardized codes into relevant groups [13]. These classifications are based on characteristics such as disease type (i.e., genetic, chronic, or autoimmune), procedure type (i.e., diagnostic, surgical, therapeutic, or preventive), and organ system (i.e., cardiovascular, respiratory, neurological, or endocrine).

[2] https://www.ekathimerini.com/news/1179739/greece-still-ranks-low-in-digital-health/

2.2.1 Healthcare Data Classification Applications

To build on what was discussed previously, which underlined the initial drive for clinical coding for disambiguation reasons, it is essential to know that its influence now extends across various domains. The ability to gather data that is machine-accessible has a significant impact on many aspects of the healthcare scene. Its critical role includes, among other things, financial allocation, health policy assessment, improved patient care, and medical technology advancement, despite its initial usage for mortality reasons.

Statistical and Research Related

One of the key reasons for employing clinical coding is the ability to perform detailed statistical analysis. Healthcare practitioners can analyze trends, morbidity and mortality rates, and patient outcomes on a local, national, and international scale [14].

Identifying high-risk populations and adjusting healthcare services accordingly are all facilitated by comparing morbidity rates across various geographic or demographic groups, and this can be supported by additional epidemiological studies to acquire a better understanding of patterns. Furthermore, the success of various treatments, both pharmacological and procedural, can be analyzed, allowing doctors to link results to specific criteria and make better decisions and treatment plans over time [13].

For doctors, communication across various languages and the nuances of their vocabulary are also strengthened in order to be able to comprehend one another without any chance of misinterpretation. Aside from that, it is possible that some acronyms or even nicknames for diseases or processes will change and no longer be understood in 50 years as data persists and people's communication styles evolve. This would suggest that all historical data would be useless for research. Clinical coding is critical in developing a common language in such scenarios [15].

Financial and Reimbursement Related

These data are used not just for statistical analysis but also for monitoring. Monitoring includes anything from ensuring that a hospital receives fair compensation for all of the patient services it renders to checking that doctors carefully adhere to guidelines and protocol. In this manner, patients receive the safest and greatest therapy while also having a documented invoice of what they had for insurance purposes. This is so because creating a clinical code is somewhat like creating an accurate and itemized bill for the services rendered by healthcare providers. Insurance firms and government reimbursement programs use these codes to

determine the appropriate payment for medical care [16].

Time management and Educational Related

In contrast to all of that, many people believe that the time and effort saved is the most significant gain. It is beyond dispute that all of the previously described benefits include reduced workload and time savings. However, an often underestimated aspect of this efficiency lies in effective data organization.

Indexing, which groups previously disorganized data and aids in the development of clinical decision support systems (CDSS), is responsible for saving time and minimizing risk while making choices. A deeper understanding of the body of knowledge that already exists regarding a clinical question can be obtained simply by having a library, i.e., a database, that specialists can quickly search through using key words or codes that correspond to specific medical phrases.

CDSS offers an alternative that is likely to be a superior automated solution for that in the future. It can provide potential diagnoses, suitable treatments, dosages of medications according to clinical guidelines, and even send notifications as reminders for patients who require routine check-ups [17]. Students are able to use this capability to boost their confidence and decision-making abilities [18]. Aside from psychological assistance, clinical coding in general could be used for educational purposes, with real-world data used in learning.

2.2.2 Clinical Coding Classification Systems

What makes those applications feasible and improvable, however, is having reliable information. In order for clinical coding data to be of high quality, a robust set of standardized medical terminology is required. Over the years, experts have established a number of requirements for successfully developing such vocabularies. Cimino [19] documented all of these best practices, which are discussed below.

Good Practices

Gaining content understanding is one of the numerous challenges of creating a regulated vocabulary. One solution would be to create every term in advance, but this is nearly impossible to achieve because many terminologies are found or even developed as time passes and the medical profession grows. This prompted the second strategy, which is to build a vocabulary in such a way that novel and discovered terms may be added at any moment. Another technique with the trade-off being the complexity of vocabulary usage would be

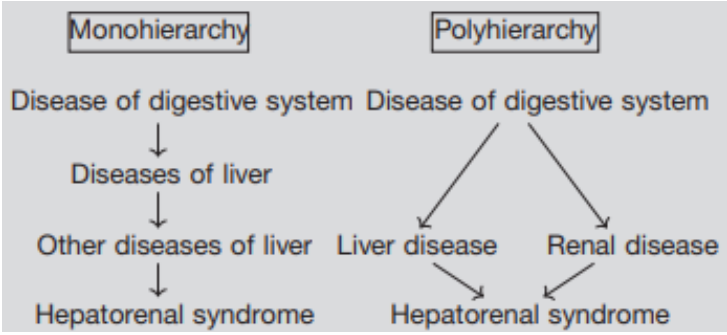

Figure 2.2: Illustration of concept of monohierarchy and polyhierarchy

post-coordination, which stands for delivering the jigsaw pieces of medical terminology and having the annotators conduct the matching and development of the terms they need.

Regarding content, it also goes without saying that the concepts be implemented permanently, so that once a word is created, it cannot be changed, and the prior synonyms may be marked as inactive and replaced by the new term. The same reasoning dictates that concepts must have at least one meaning ("nonvagueness"), no alternative interpretations ("nonambiguity"), and only one term ("nonredundancy") for each concept. Of course, a unique identification is also necessary, but not the name, as the words used to refer to a concept might change, but the idea's meaning cannot.

In a controlled vocabulary, researchers and developers seek formal definitions of terms as well as connections to other concepts. Definitional knowledge (connections between words) and assertional knowledge (particular facts or statements about the terms) should be distinguished in these definitions. Defining the cause of an illness, for example, is definitional, whereas describing a treatment for that disease is assertional. Likewise, to maintain this formality, additions such as "not elsewhere categorized" should be avoided.

Moreover, it is widely agreed that adopting hierarchy in clinical ideas is beneficial for organizing and locating terms through a tree-like construction. However, it is currently debatable if strict hierarchy is superior to polyhierarchy. The widespread consensus rejects the opposing viewpoint's argument that tight hierarchies are more manageable. Although there is preference across several hierarchies, it isn't due to which tree is more significant but rather to the simple fact that polyhierarchy better conveys clinical complexity while avoiding redundant terms.

Since medical vocabularies are used by many people for a variety of reasons, a high degree of detail is essential for highly specialized jobs, yet such granularity may be burdensome for a more broad activity; hence, several granularities must coexist. The same applies for usage for varied reasons, because in certain cases, just one tight hierarchy or a few concepts are

relevant to the task, and the vocabulary must be adaptive to those needs.

Because of its independence from the specific contexts in which it is to be used, standard regulated language might be confusing on how to be correctly used in EHRs. Researchers propose a regulated vocabulary with contextual representation and grammar. Viewing patient information recorded from the perspective of an "event" can further aid in modeling actions during care episodes.

Last but not least, controlled vocabularies must evolve with time, even if they are seemingly perfect, to accommodate the evolution of medical knowledge. However, they often change for creators' convenience but can cause issues for users. Maintaining vocabulary requires clear descriptions of changes and reasons, allowing for understanding of good reasons (e.g., addition, refinement, disambiguation, obsolescence, redundancy) and avoiding bad reasons (e.g., redundancy, major name changes, code reuse, and changed codes).

Key Clinical Coding Standards

While articulating good practices in clinical coding may seem straightforward in theory, the actual implementation is a complex endeavor marked by numerous challenges observed in practice. These challenges, constantly identified and noted for improvement, underscore the dynamic nature of coding standards.

Over the years, a multitude of classification standards have surfaced, each attempting to address the complexities of healthcare data. However, as we navigate this landscape, it becomes clear that some standards have not only survived but have outperformed their contemporaries, confirming their importance in the developing area of clinical coding. ICD-10, CPT, SNOMED CT, and other standards have proven to be resilient and pertinent, gaining significant attention across the global healthcare scene. That occurred because most systems developed were limited to specific scenarios, such as being overly broad or too specific, and were also monohierarchical, including ICD-10 [15].

This thesis conducts a thorough examination of ICD-10, diving into its complexities. However, it's important to note that other coding standards will not be included or analyzed within the context of this study.

ICD-10

Despite its great ancestors' initial purpose of mortality classification, the International Classification of Diseases, 10th Revision, or ICD-10, is a coding system for both diagnoses and procedures that was implemented by the World Health Organization in 1992, replacing the

previous ninth revision, which had been in effect since 1975 [20].

While the United States transferred to ICD-10 on October 1, 2013, the rest of the world's adoption of ICD-10 varies by country. Many countries had already implemented ICD-10 before the US, while others had done so later. By 2011, about 110 nations employed the ICD-10 for cause of death reporting and statistics, and it has since spread in many countries worldwide, with 27 of them using it for reimbursement and allocation purposes and many even adapting it to their needs [21].

Its introduction into the healthcare system, however, does not come easily, as it raises multiple challenges such as enduring training and technological up-dating, both of which cost money. The challenges persist as the system undergoes annual updates to align with evolving healthcare practices. This necessitates individuals investing in updated resources and reacquainting themselves each year with the modifications. To make this process easier, General Equivalence Mappings (GEMs)[3] are in place to help with the transition from ICD-9-CM to ICD-10-CM and ICD-10-PCS. GEMs constitute essential tools for bridging the gap between old and new code sets. While GEMs make the conversion easier, they do not eliminate the need for continual education and adaptation.

Regarding its structure, ICD-10 is divided into two modules: the CM and the PCS. CM stands for Clinical Modification and is used for diagnoses, whereas PCS stands for Procedure Coding System and is used for inpatient operations. Both modules comprise almost 155.000 codes, a 71.2% increase over the previous revision. Moreover, many codes from the previous version can be mapped to more than 50 codes in the current, but the opposite is also true, although with less intensity.

More specifically, it comprises codes for everything, including indications, symptoms, unusual outcomes, concerns, social circumstances, and other sources of injury or illness. Its architecture is built by having each code be seven characters long, beginning with a letter and followed by two digits, as seen in table 2.1[4], establishing the code's broad category. Additional numbers further categorize the code into specific elements, such as location and severity. As a result of their hierarchical nature, ICD-10 codes serve as an excellent systematic classification system.

For instance, according to MedicalBillingandCoding.org [5], the code A01.021A can be understood as follows: "A01" designates the disease category that is lung-related, while "0" indicates a general type of it. Further, "2" refines the classification to offer more specificity

[3]https://old-prod.asco.org/practice-policy/billing-coding-reporting/icd-10/general-equivalence-mappings-gems
[4]https://en.wikipedia.org/wiki/ICD-10
[5]https://www.medicalbillingandcoding.org/icd-10-cm/

Chapter	Block	Title
I	A00–B99	Certain infectious and parasitic diseases
II	C00–D48	Neoplasms
III	D50–D89	Diseases of the blood and blood-forming organs and certain disorders involving the immune mechanism
IV	E00–E90	Endocrine, nutritional and metabolic diseases
V	F00–F99	Mental and behavioural disorders
VI	G00–G99	Diseases of the nervous system
VII	H00–H59	Diseases of the eye and adnexa
VIII	H60–H95	Diseases of the ear and mastoid process
IX	I00–I99	Diseases of the circulatory system
X	J00–J99	Diseases of the respiratory system
XI	K00–K93	Diseases of the digestive system
XII	L00–L99	Diseases of the skin and subcutaneous tissue
XIII	M00–M99	Diseases of the musculoskeletal system and connective tissue
XIV	N00–N99	Diseases of the genitourinary system
XV	O00–O99	Pregnancy, childbirth and the puerperium
XVI	P00–P96	Certain conditions originating in the perinatal period
XVII	Q00–Q99	Congenital malformations, deformations and chromosomal abnormalities
XVIII	R00–R99	Symptoms, signs and abnormal clinical and laboratory findings, not elsewhere classified
XIX	S00–T98	Injury, poisoning and certain other consequences of external causes
XX	V01–Y98	External causes of morbidity and mortality
XXI	Z00–Z99	Factors influencing health status and contact with health services
XXII	U00–U99	Codes for special purposes

Table 2.1: ICD-10 Chapters and Titles

about the complexity of the disease, and "1" provides additional details about its impact on the cardiopulmonary system. The "A" at the end denotes the clinical context, specifying that this code is associated with the initial encounter with the disease. Its precise hierarchy is as follows:

- A01.0 Disease of the lungs
  - A01.01 simple
  - A01.02 complex
    - A01.020 affecting the trachea
    - A01.021 affecting the cardiopulmonary system
      - A01.021A initial encounter
      - A01.021D subsequent encounter
      - A01.021S sequela

It is important to highlight at this point that another version, ICD-11, was formally launched in January 2022; however, it is still in the early phases of implementation, with only minimal data collected or applied. Thus, the ICD-10 is the main focus of this thesis, and the dataset used has been annotated using this specific version.

2.2.3 Challenges

The accuracy of the coding process and hospital data documentation must be carefully considered in order to prevent the misclassification of illnesses and other coding problems. Planning as well as epidemiological and medical research for both health care providers and management are threatened by depending on data whose categorization quality is ambiguous or subpar. Clinical mistakes can occur during both procedures and diagnosis, and various studies have classified them into several categories. This classification is organized into physician-related, clinical coder-related, and management, financial, and executive-related, as suggested in the Hosseini et al. research [22]. Collected information is provided in the studies of Hosseini et al. [22], Alonso et al. [23], and Asadi et al. [24].

Physician-Related Challenges

Physicians and other healthcare providers, mostly nurses and laboratory technicians, provide clinical data, which is subsequently sent to medical coders and health information management specialists to be coded and then verified to ensure accuracy. Therefore, the first documentation by the professionals is the first stage in the coding process of coded data production and is the primary source of errors. The precision and quality of the written material, the method of documenting, the prioritization and acknowledgment of the documentation's value, and legal complications are all issues that lower the quality of clinically coded data.

Regarding the value that physicians place on documentation, hospitals frequently suffer from a high level of chaos as a result of their enormous workload, which leads to the documentation process being de-prioritized. The amount of time that professionals have to devote to this duty may be restricted, so they sometimes put it off until the end of their lengthy shifts when they are worn out. Additionally, they frequently assign this duty to residents, who tend to be inexperienced or ignorant of clinical coding. Since clinical coding is not generally addressed in medical school curricula, this problem extends to the physicians themselves. As a result, individuals may be unfamiliar with how data is used in this process, as well as the rules and standards, such as ICD codes. This lack of understanding makes it difficult for doctors to format their paperwork in a way so as to make coding smoother.

Identifying particular cases where documentation inadequacies have resulted in noticeable consequences is not too difficult. Some papers, for example, include repeated or generalized material and may lack specificity in outlining procedures. Furthermore, the usage of acronyms that are not permitted by coding standards, such as ICD, is prevalent. Owing to ambiguity or the fear of false allegations, clinicians might also refrain from openly expressing diagnoses or results. Because coders rely on clear information, the inherent ambiguity in medical diagnosis can be a burden in documentation. Coders are unable to change the document in any way; thus, even if a diagnosis, for example, is clearly inferred, coders are unable to change it. In fact, a final diagnosis is required by several coding systems [22]. Here is where it becomes evident once more how little doctors know about the guidelines, including recording indeterminate diagnoses such as "R/O" (rule out).

In addition to the challenges pertaining to the importance placed on documentation and the absence of expertise in this field, a number of other challenges are present. As was already indicated, as medical records pass through several people, communication and validation frequently lapse. For example, a nurse may supply a patient's medical history while a doctor formulates a discharge report without communicating with the nurse or even reviewing the history, resulting in differences in the records since individuals frequently lie, especially in front of nurses, and in general when other people are present when the history is obtained. Furthermore, clinicians may create a diagnosis based on the tests available at the time, and as new information becomes available, either from the patient or from tests performed, the diagnosis may change, but these revisions are not necessarily noted. The issue develops when there is a complete lack of revalidating the content that has been recorded, which is mostly due to a lack of time and responsibility on behalf of everyone who has contributed to the record-keeping. In this regard, coders must thoroughly examine the entire document to certify its validity.

Last but not least, legal reasons frequently lead to the withholding of external causes from medical records. Aside from the fact that individuals may hide information throughout the entire procedure out of fear or other reasons, physicians may opt to protect their patients from potential legal or societal ramifications by not noting certain aspects. To protect confidentiality, patient histories are normally obtained in the patient's presence only. Some details, such as situations involving illicit narcotics, may be purposely suppressed in this circumstance when privacy is strictly maintained. Also, doctors may even supply information that conforms with insurance criteria, even if it does not exactly reflect the reality, to reduce the complexity of patient reimbursement.

Clinical coder-Related Challenges

It is critical to understand that, while most difficulties that clinical coders face and must resolve are caused by physician documentation, coders themselves also misuse their authority and are to blame independently.

Coders, like doctors, must be knowledgeable about coding regulations, standards, and their documentation, which is difficult because they are continuously changing and the paperwork is extensive. In most circumstances, clinical coders have at least fundamental abilities, such as understanding of illness types and pharmaceutical categorizations, as training certifications are now required in most cases in order to become one. Certain things, however, cannot be taught to beginners and must be learned on the job, which takes time. Aside from being substantially slower than experienced coders who have been doing the job for more than three years, novice coders are also more prone to mistakes. Some common errors committed by beginners as well as professionals throughout this procedure include upcoding and undercoding, which means that they code things that are not expressly specified and completely overlook some entities.

Besides plain procedural errors, struggles with data quality, paired with limitations on coders' ability to insert or alter provided text, often lead to a challenging dilemma. Coders may find themselves in a situation where they must decide whether to code something that isn't explicitly stated but rather implied, because otherwise, it would go entirely undocumented. Physicians who simultaneously work as clinical coders may be more vulnerable to this practice since it is simpler for them to understand and accurately presume unspoken diagnoses. However, this approach conflicts with official guidelines and remains fundamentally incorrect. Furthermore, when coding is still done on paper records, as is still the case in certain hospitals today, the procedure might become more difficult. Handwritten notes by physicians are famous for being difficult to interpret, and there is sometimes insufficient space to neatly append codes above the text, posing difficulties for coders. Plus, the transition from paper to a digital format often requires a third party, which increases the possibility of errors such as misinterpretations, typographical errors, or omissions.

Moving on from these difficulties, it is critical to recognize the wide range of clinical coding practices. Significant variation is noticed between healthcare organizations when it comes to clinical coding. Some hospitals just use discharge notes as the primary source for coding, but others use a more thorough approach, utilizing the whole medical record. Because of this mismatch in practice, clinician coders are frequently compelled to prioritize the evaluation of discharge notes, even when these notes may lack key information necessary

for exact classification. The current time restrictions and reimbursement systems, where coders are typically encouraged based on the number of codes created rather than the depth of knowledge obtained within the medical data, often support this preference for discharge notes.

Management, Financial, and Executive-Related

Various managerial, financial, and executive issues, most of which were described in earlier sections, also have an impact on the quality of medical record coding. Concerns mainly stem from inadequate scrutiny and from not having effective motivation strategies for coders. Financial challenges come into play as well, with budget constraints limiting resources for coding improvements and financial incentives for coders often lacking. In addition to the issues previously mentioned, in the realm of information technology, clinical coders grapple with challenges like insufficient coverage of specific diagnoses in coding standards and compatibility issues with software updates. Finally, the absence of penalties for documentation errors, particularly by physicians, is also an issue.

2.3 Clinical Text Annotation

In order to comprehend the technical aspects of the clinical coding process, we must first have a greater awareness of the logic and technical intricacies of the semantic annotation task in general and its steps, and then focus on the clinical domain's nuances to improve the task.

To begin with, annotation of text is the act of marking and categorizing any textual information in order to clarify, remark on, or otherwise arrange and formalize it [25]. It has been classified in a variety of ways based on factors such as structure, purpose, accessibility, interaction, and more, but we are only interested in the ones listed below. To make it clear in both a general and more specialized context, examples are offered that are broad and domain-specific, i.e., clinical.

Based on the information they convey and their intended function [26]:

- Textual Annotation: Textual notes are remarks written about things that are primarily intended to be read by humans. Typically, these comments are descriptive and give more information about the object. They are not machine-readable since they are not structured data but rather plain text.

  Example: Original sentence in the text: "The study indicates a rising global average temperature." "Urgent climate concern!" can be a textual comment within the text.

- Link Annotation: Link annotation, which extends textual annotation, includes linking an item to other material via hyperlinks or references. Link annotations allow readers to obtain further information by following the supplied links.

  Example: A link labeled "Source: [URL]" can be used to direct the reader to a website where the source information can be found.

- Semantic Annotation: In contrast to textual notes and link annotations, semantic annotation provides machine-readable information about objects. Semantic annotations, as opposed to plain text, employ structured data to offer information about the object. This structured data is frequently based on pre-established standards or ontologies, allowing computers to analyze the information.

  Example: A dataset of animals could include annotations that specify the taxonomic classification of each species.

Based on the structure, formality, and standardization of the annotations [27]:

- Informal Annotation: Informal annotations are annotations generated using normal language rather than rigid data standards or formal frameworks. These comments are frequently detailed and aimed at human readers.

  Example:

  Clinical record sentence: "The patient's lab results show elevated cholesterol levels."

  Informal annotation within the clinical note: "High cholesterol may indicate an increased risk of cardiovascular disease; lifestyle changes and monitoring are recommended."

- Formal Annotation: Formal annotations are machine-readable, but they do not employ ontological terms.

  Example: In the medication section of an EHR, formal annotations can be structured data entries. An illustration:

  - Medication: *[Aspirin]*
  - Dosage: *[81 mg]*
  - Frequency: *[Daily]*
  - Start Date: *[22/10/2023]*

- Ontological Annotation: Ontological annotations have clearly specified elements and utilize only ontological concepts that are universally recognized and understood.

Example: The patient was diagnosed with *Type 2 diabetes mellitus without complications* [E11.9].

Considering the aforementioned categories, clinical coding should be regarded within the context of formal and semantic annotation. However, it does not fully capture the features of an ontological representation. Ontologies go beyond basic classification and offer a more detailed understanding of the relationships and semantics associated with concepts. Clinical coding, on the other hand, includes named entity recognition (NER) and named entity linking (NEL). These tasks can either be performed as separate steps or combined into a single task.

2.3.1 Name Entity Recognition

Named Entity Recognition is a fundamental information extraction task within natural language processing, aiming to identify and categorize entities within text. Entities, which might contain the names of individuals, locations, organizations, dates, and numerical values, are predetermined by the designer and can comprise a wide range of concepts. In specialized domains like healthcare, typical entities include diseases, medications, and procedures.

In a clinical environment, for example, one annotation would look like this:

Original Text: The patient was diagnosed with hypertension.

Annotated Text: The patient was diagnosed with [disease: **hypertension**].

In this example, the NER system has labeled the entity "hypertension" with the label "disease", demonstrating how NER may be used to detect and categorize specific entities within healthcare-related text.

This task is a key element in many NLP applications and activities, laying the groundwork for more complicated undertakings. By automating the identification and categorization of certain entities, NER promotes the extraction of structured information from unstructured text, hence contributing to the organization and analysis of complicated textual data. This is especially true in the health domain, where clinical entity recognition (Clinical NER) is extremely important. The ability to consistently recognize and categorize events like illnesses, drugs, and treatments is critical in healthcare for tasks such as EHR analysis, medical research, and healthcare decision-making.

Regarding the formulation of predefined classes, multiple schemes have been devised for crafting specific classes in NER. Among these, the simplest scheme is the IO scheme, where each token is labeled as either "I" (inside), indicating that the token is within an entity, or "O" (outside), signifying that the token is not inside an entity. Building upon this, the IOB and IOB2 schemes introduce the "B" (beginning) tag for tokens at the start of an

entity. To be precise, the IOB scheme flags the beginning word of an entity as "B" only if it immediately follows another entity, and the IOB2 scheme extends this use to every beginning word, regardless of its preceding entity. Next, the IOE scheme incorporates an "E" (ending) tag instead of "B". More intricate schemes include IOBES, which retains the IOB and IOE tags but adds an "S" (single) tag for single-token entities. In comparison, BIES mirrors IOBES but extends its application to non-entity tokens. Numerous other variations exist, each with a unique underlying logic.

Among the various schemes for integrating NER, each comes with its own set of advantages and disadvantages. The IO scheme, for instance, is straightforward and simple, but it has a limitation. It fails to detect consecutive entities. On the other hand, more complex schemes, such as IOB, IOE, IOBES, and BIES, address the issue of consecutive entities by introducing additional tags. However, the intricacy of these schemes comes with its own set of challenges.

The choice of annotation scheme has been empirically shown to have a significant impact on the performance of NER models [28]. Some schemes may excel at capturing specific types of entities or structures, while others might struggle in certain contexts. Understanding the pros and cons of each scheme is crucial in selecting an appropriate approach that aligns with the nuances of the data and the requirements of the NER task at hand.

2.3.2 Challenges

There are several issues in the field of named entity recognition that vary across different domains. While NER may appear to be a simple process at first glance, in the multilingual clinical domain, in particular, it becomes quite complex.

Domain Challenges

The intricacy of clinical language, the frequency of domain-specific acronyms, and the different structures of medical papers all contribute to the one-of-a-kind set of problems that must be addressed when extracting meaningful entities [29].

To begin with, abbreviations present a significant challenge in clinical entity recognition because the widespread use of different abbreviations among different healthcare professionals and institutions makes it difficult for models to consistently interpret and classify these entities correctly. In actuality, though, this is only one aspect of clinical terminology's intricacies. In clinical terminology, a single phrase can have several meanings in different situations. For example, an event might be represented by a plethora of adjectives, and one minor alteration of a term can transform the entire entity. This hassle, along with the fact that EHRs are often

abstract and imprecise, leads to interpretation mistakes. As a result, training models on large datasets becomes essential in order to capture the diversity of entities and their particular meanings, developing not just domain knowledge but also zero-shot ability.

Aside from capturing the precise semantic meaning of terminology, dealing with entities in the text has extra technical difficulties due to their formatting. Entities with overlapping texts present challenges for NER models since descriptions might differ in their level of abstraction. Working with such composite sentences makes it difficult to separate key pieces. For example, terms like ”chronic respiratory condition” may require a more comprehensive understanding to convey the appropriate aspects. That is, reading this description sometimes necessitates seeing both the particular respiratory feature and the chronic character as different entities.

Likewise, composite illness combinations, in which descriptions cover many entities in one, add another degree of difficulty. Models may struggle to distinguish separate components inside composite phrases, perhaps resulting in mistakes. For example, the phrase ”lung and bronchial cancer” encompasses both lung and bronchial cancer, necessitating careful differentiation. In contrast, there are instances in which a single entity is concatenated, posing a distinct issue. Disjoint findings in clinical literature demand an understanding of their relationship. Failure to recognise this link might lead to incorrect entity extraction. For example, ”vestibular” and ”migraines” must be described as linked things, if not as the same entity, in the following sentence: “The patient experienced migraines, and subsequent investigation confirmed their vestibular origin.”.

Another important aspect to consider is negation detection, which is vital in clinical NER since models must recognise when entities are expressly denied in the text. To avoid false positives in entity recognition, for example, avoiding flagging statements like “no abnormalities found” is critical. Finally, the significance of entities varies in clinical literature, with elements such as finding methods and chronological relevance determining their value. Standard NER techniques may struggle to capture these variations, emphasizing the significance of more advanced models that account for varied entity importance.

Multilingual Challenges

In addition to the issues described above, it is critical to separate these difficulties from those caused by multilingualism.

To begin with, multilingual models must properly manage numerous languages at the same time. This implies that a multilingual model must understand the intricacies of many languages simultaneously. To flourish in a variety of linguistic conditions, these models

must first have a thorough knowledge of language variances. They must, however, strike a balance between their proficiency in specific languages and their ability to function successfully across several languages. This balance is intended to mitigate the potential performance loss associated with the "curse of multilinguality".

Additionally, multilingual models, as a rule, require a substantial amount of data to achieve optimal performance. Yet, working with clinical data is a significant difficulty, particularly in languages where such data is limited. In many instances, the available data is insufficient for effective model training. This highlights the importance of zero-shot learning capabilities, which enable models to generalize even with non-existent training data. Nevertheless, for languages with different features, such approaches frequently fail to produce good results.

2.3.3 Model Assessment

Evaluation Metrics

In classification problems, the goal is to predict entities and categorize them into predefined classes. To assess the performance of a classification model, various evaluation metrics are employed. Precision and recall are two key variables in this context, each emphasizing a distinct element of the model's predictive skills. More specifically, precision accuracy is concerned with minimizing false positives, ensuring that when the model predicts a positive instance, it is highly likely to be true, whereas recall is concerned with minimizing false negatives, ensuring that when the model predicts a negative example, it should not be incorrect.

Precision and Recall are computed as follows:

$$P = \frac{\text{True Positives}}{\text{True Positives} + \text{False Positives}} \tag{2.1}$$

$$R = \frac{\text{True Positives}}{\text{True Positives} + \text{False Negatives}} \tag{2.2}$$

However, in named entity recognition and other tasks, the F1 score is the dominant metric. The F1 score is the harmonic mean of precision and recall and is best suited for tasks that need a delicate balance of those. Notably, NER tasks, as opposed to binary classification situations, require the identification and categorization of several entity classes, making the F1 score a more useful indicator of total performance.

The F1 score is computed as follows:

$$F1 = 2 \times \frac{P \times R}{P + R} \tag{2.3}$$

Given that NER models usually operate at the subword or character level, the question of how an entity prediction is calculated arises. More demanding evaluation modes require the model to predict not only the proper entity type but also its precise bounds. However, completing this assignment is challenging. Alternatively, a more tolerant mode, concentrating only on whether the predicted entity has an overlapping span with the ground truth, can be used. The researcher can choose between the two metrics—strict limits or overlapping spans—based on the specific nuances of the topic at hand.

A broad range of analytical measures extends beyond those mentioned. Message Understanding Conference has introduced metrics in the evaluation of Natural Language Processing tasks, considering various categories of errors [30]. These metrics are as follows:

1. Correct (COR): The system's output is consistent with the truth (TP).
2. Incorrect (INC): The system's output is not consistent with the truth.
3. Partial (PAR): The output of the system and ground truth are "similar" but not identical.
4. Missing (MIS): The system cannot locate an existing entity.
5. Spurious (SPU): The system discovers a non-existent entity.

These classifications provide a flexible foundation for customizing the recall and precision measures to the individual needs of a given problem. For example, the use of partial matches can be effortlessly incorporated as follows:

$$P = \frac{\text{COR} + 0.5 \cdot \text{PAR}}{\text{True Positives} + \text{False Positives}} \tag{2.4}$$

$$R = \frac{\text{COR} + 0.5 \cdot \text{PAR}}{\text{True Positives} + \text{False Negatives}} \tag{2.5}$$

Loss Function

While formal model assessment is often performed at the end of training for comparison analysis, evaluation also occurs continuously during the training process. The loss function is the metric required to update the model throughout training. Unlike the post-training measures used for comparison, the loss function offers information about the model's learning progress. For classification, the most frequently used training measure is cross-entropy loss.

The formula for cross-entropy $H(p, q)$ is expressed as:

$$H(p,q) = -\sum_{c=1}^{M} p_{o,c} \log(q_{o,c}) \tag{2.6}$$

Where:

- M: The number of classes
- $p_{o,c}$: The true probability that observation o belongs to class c. This is a binary indicator (0 or 1).
- $q_{o,c}$: The predicted probability that observation o belongs to class c.

Implemented using information theory, cross-entropy is a relative metric that quantifies how close the predicted distribution of the model is to the true distribution of the targets. This implies that minimizing cross-entropy during training drives the model's predictions to closely match the actual distribution.

2.4 Transformers

2.4.1 Architecture Overview

Transformers have emerged as the cutting-edge method for NLP tasks in recent years. The current model's enhanced performance over earlier state-of-the-art deep learning natural language processing models can be attributed to the efficiency of the attention mechanism. Although the mechanism employed by Bahdanau et al. [31] for machine translation was intended to overcome RNNs's limited comprehension of context, it wasn't until Vaswani et al.'s research [32] that it gained traction and shot to the top of the list of text data application architectures.

Similar to numerous other sequence models, transformers feature an encoder-decoder architecture. In a more detailed breakdown, the original transformers were crafted with a single decoder stack and a single encoder stack. Each stack comprises multiple layers of identical encoders in the case of the encoder stack and identical decoders in the case of the decoder stack. These layers have distinct weights. For its inputs, each stack contains embedded layers. Finally, an output layer is present to provide the final output. In Figure 2.3, a detailed representation of this architecture of the original transformer is presented. However, it's important to keep in mind that transformer architectures are versatile and may take on numerous forms. Both the encoder and the decoder are included in the sample that is shown. In actuality, though, transformers may be tailored for particular purposes, and depending on the demands of the application, there are variants that can only use the encoder side.

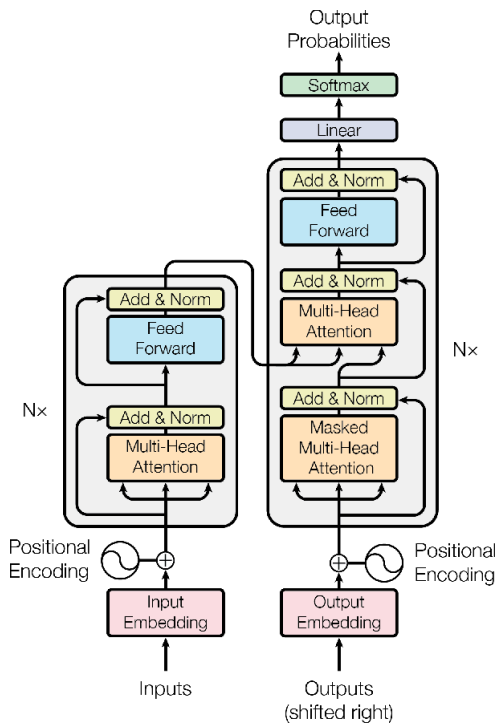

Figure 2.3: The Transformer architecture.

Although transformers can take many different shapes, this architecture's versions are all tied together by the addition of an attention mechanism. Every transformer model's attention mechanism is its central component and the key to its success. The creative framework, which can understand a word while taking into account its wider context, has been crucial in raising the bar for the whole model family. The exact equation of the self-attention process is efficiently expressed by the formula that follows:

$$Attention(Q, K, V) = softmax(\frac{QK^T}{\sqrt{d_k}})V \tag{2.7}$$

Each word has three representations: Query, Key, and Value, which represent different things. The Query represents the word that we want to assess or focus on. The Key signifies the attribute of the word that provides context or relevance. Finally, the Value embodies the actual information or content associated with the word. The attention mechanism measures the similarity of each word in the sequence by computing attention scores for each other word. This generates each word's significance in relation to the target word. The corresponding values of each word are then weighted based on these attention scores, and the final representation for the target word is formed by adding the weighted values. Every word in the sequence receives a representation that takes into account its contextual relationships with other words, since this procedure is repeated for every word in the sequence.

A similar fundamental logic frames both encoder-decoder attention and multi-head attention, the other two main attention mechanisms of transformers, in addition to self-attention. The transmission of important data between the encoder and decoder is facilitated by encoder-decoder attention, which is essential for tasks like sequence-to-sequence translation. On the other hand, by using parallel processing with many attention heads, multi-head attention increases computational efficiency. It is worth mentioning that researchers continue exploring and build novel attention mechanisms.

2.4.2 Transformers in Health Domain

In the field of natural language processing applied to EHRs, transformer-based models take the lead, accounting for roughly one-half of all models applied to the various tasks, including named entity recognition, text classification, semantic similarity, named entity linking, relation extraction, question answering, information retrieval, and de-identification. Among them, BERT and BioBERT appear to be the most widely used. Interestingly, innovative models only contribute less than 10%, while language-wise, at least 70% of research is done in either Chinese or English [33].

As transformers have become the predominant choice in contemporary NLP research within the health domain, numerous models have emerged, with claims of over 40 transformer-based models in the biomedical field since the introduction of BioBERT [34]. A common characteristic among these models is their utilization of transfer learning, where a large pre-trained model is leveraged and fine-tuned for specific tasks rather than being entirely novel. Notably, in tasks specifically related to electronic health records, a majority of models have adopted a BERT-based architecture.

Given the impracticality of examining each model in detail, it is noteworthy that BERT, as both a pioneer and inspiration, will be the focal point in the subsequent section. This underscores its foundational influence on subsequent developments in the field.

BERT

BERT, which stands for Bidirectional Encoder Representations from Transformers, is a neural network that was developed by Devlin et al. [35], in 2019, in order to be used as a pre-trained model for different NLP applications. It was trained on a combination of text from the BooksCorpus[6] dataset (800 million words) and Wikipedia (2.5 billion words) and has an advantage over other models, since it understands the context and connections between

[6]https://en.wikipedia.org/wiki/BookCorpus

words in both directions in a sentence at all levels of its architecture. For that reason, when it was published, it became the state-of-the-art in seven NLP tasks, and it was the first to be the state-of-the-art in both sentence-level and token-level tasks.

The architecture of the model is based on the original idea presented by Vaswani et al.[36]. It comes in two versions: $\text{BERT}_{\text{BASE}}$, which matches the model size of GPT for meaningful comparison, and $\text{BERT}_{\text{LARGE}}$. Because of its innovative architecture using special tokens, BERT's input representations are adaptable, allowing both single phrases and sentence pairs. The [CLS] token denotes the beginning of each sentence, whereas the [SEP] token denotes the transition between sentences, which can refer to abstract text spans in this context. For text representation, BERT utilizes WordPiece embeddings. WordPiece tokenization divides words into subword units, allowing for the handling of out-of-vocabulary terms and complicated word structures in many languages. Additionally, it has a vocabulary of 30,000 tokens, and the final representation of its input token is built as the sum of token, segment, and position embeddings.

Bert's architecture features, such as special tokens and embeddings that take into account the position and context of each token's neighborhood, make it appropriate for a variety of NLP tasks. Among these tasks are:

1. Paraphrasing tasks, where input is sentence A and sentence B, which are divided by the [SEP] token and represent pairs of sentences to be compared for similarity.

2. Connection tasks, which correspond to hypothesis-premise pairs and include determining whether the hypothesis can be rationally drawn from the premise.

3. Question-answering tasks in which the inputs A and B represent question-passage combos, allowing the model to discover answers in the passage depending on the question.

4. **Text classification or sequence tagging tasks**, such as ICD coding, in which sentence A is utilized and sentence B is represented as "empty", signifying a single text for classification or tagging.

Unlike ELMO and GPT, BERT is pretrained with two unsupervised tasks: MLM and NSP. Masked Language Model (MLM) is an approach for training models that involves randomly masking a percentage of the tokens in the input with the goal of predicting the original vocabulary identifier of the masked word based only on its context. This was employed in BERT with an 80-10-10 split to keep all possibilities: masking randomly, swapping the token with another, and not altering it at all in order to make the model more resistant

to unexpected vocabulary and hence react to real-world settings. Next sentence prediction (NSP), on the other hand, is another strategy used for pretraining such models by providing them with two sentences to work with and having it determine in binary form whether the two sentences are expected to be next to one another, aka connected. NSP was included in pretraining because many NLP tasks rely substantially on recognizing and modeling the connections between sentences or textual parts.

One could wonder how BERT can be fine-tuned for NLP tasks. Because of the self-attention mechanism, BERT can be fine-tuned by changing their input and output without affecting their current layout. Input configurations were previously described, and output configurations include inserting one extra output layer into BERT; therefore, a limited number of parameters must be learned from scratch.

2.4.3 Multilingual Transformers

Despite the fact that English is spoken by around 20% of the world's population, most modern language models are largely targeted at the English language. This is a concern since these models fail to adapt to different languages due to their distinct linguistic characteristics. Fortunately, recent advances in research have resulted in models that are able to be applied to a broader number of languages.

In this endeavour, researchers are adopting two key tactics. To begin, they are extending current language models that were initially created for a single language to become multilingual. This entails training these models on datasets that cover many languages, allowing them to acquire and apply information across linguistic barriers. Meanwhile, the other strategy introduces translation challenges during model training, assisting models in becoming adept at dealing with a wide range of language complexities. This method dramatically improves a model's competency in zero-shot learning, which is critical when dealing with languages with little to no training data. That is why, by exposing models to translation challenges, they gain a more comprehensive knowledge of language semantics, allowing them to generalize well and perform well even when data for a single language is minimal or nonexistent.

In terms of the model's representation tables, many adhere to dividing them by language during pretraining in order to better capture the unique properties of each language. Subsequently, alignment approaches are used at both the word and sentence levels. The goal is to have similar vector representations for similar words across languages. This strategic alignment enables models to use insights from one language to improve comprehension in another. The dominant strategy in contemporary research for cross-lingual modeling, however, is the

use of shared language embeddings, also known as multilingual embeddings.

Cross-Lingual pretraining methods

Numerous pretraining methods for multilingual models exist, both supervised and unsupervised, ranging from traditional monolingual approaches like Masked Language Modeling and Next Sentence Prediction to other models incorporating multilingual objectives.

TLM [37], an unsupervised modification of the MLM approach, incorporates the use of parallel data. The objective remains consistent with masked language modeling, but with a notable distinction: inputs consist of similar concatenated phrases in different languages. In this method, random masking occurs in both languages, and predictions are made based on the representations from both languages. This implies that when there is insufficient information in one language, the model leverages the expertise of the other language to enhance its understanding, fostering a more comprehensive grasp of the content.

Similarly, cross-lingual MLM [38], another technique, shifts to the document level. Instead of dealing with similar concatenated phrases, a complete cross-lingual text is used as input for the MLM task. Each document, which is made up of phrases in several languages, is subjected to masked language modeling, with the model predicting masked tokens throughout the document.

Moreover, an additional method for cross-lingual pretraining is cross-lingual word recovery assignment [38]. The basic goal of it is to create alignments between word representations in two different languages. In this task, a pair of sentences, each in a different language, serves as input. The model's goal is to represent each word within one language using embeddings derived from the other language. Following that, the model predicts the original word sequence in each language using the learned cross-lingual representations. This exercise aids in the construction of models capable of comprehending how words in one language correspond to their equivalents in another, hence promoting cross-lingual semantic alignment.

Lastly, cross-lingual paraphrase classification [38] requires assessing whether two statements in different languages communicate comparable meanings. The goal of cross-lingual paraphrastic categorization is to evaluate the similarity between pairs of phrases written in different languages. Positive examples, which are pairs of sentences that are true paraphrases, and negative examples, which are pairings of sentences that have some amount of resemblance but are not true paraphrases, are often assigned. The negative examples serve to test the model's ability to discriminate between phrases that may share words or concepts but may not have the same exact meaning.

Chapter 3

Related Work

3.1 Scope of the literature Review

The scope of this literature review involves an exploration of competitions and datasets within the clinical text domain, with a specific focus on applications leveraging BERT-based models and multilingual transformers for biomedical entity recognition.

- **Shared tasks and Datasets for Clinical Text**: This section begins by delving into shared tasks that have had a substantial impact on the clinical text analysis landscape. Then, the investigation continues by analyzing the benchmarks against which state-of-the-art multilingual systems are reviewed and compared. After that, a variety of datasets curated for clinical NER text evaluation are mentioned. Understanding these datasets is critical for evaluating model and algorithm performance. Notably, this analysis focuses on identifying the datasets mentioned in Section 3.3.3.

- **Applications, BERT-Based Model Applications**: The initial and widely recognized BERT models adapted for clinical applications are identified and discussed here. These versions serve as reference points, highlighting developments and optimizations particular to the clinical text domain. Additionally, GreekBERT is mentioned since it is the only monolingual Greek transformer.

- **Applications, Multilingual transformers**: Transitioning to multilingual transformers, this section aims to provide a basic understanding of their architectures. Identifying the benefits and possible drawbacks of these models' structures is critical for handling linguistic variety in clinical text analysis.

- **Applications, Biomedical NER with Multilingual transformers**: Following that, the emphasis changes to utilizing the capabilities of the previously described multilingual transformers. This section discusses how these transformers are used to detect and categorize entities in clinical content.

3.2 Shared tasks and Datasets for Clinical Text

3.2.1 Shared tasks

Challenges shared that play an important role in advancing clinical NLP health-related tasks are described in this section. These contests serve as dynamic events that examine the performance of models. Table 3.1 provides information on annual workshops, while Table 3.2 provides individual corpora released as shared tasks.

Table 3.1: Clinical NLP annual Workshops

Competition	Description
BioCreative	While BioCreative's major focus remains on the biological domain, clinical NLP tasks have been integrated.
CLEF eHealth Lab Series	Since 2013, it has conducted annual challenges in clinical information extraction, management, and retrieval tasks.
eHealth-KD	eHealth-KD, like CLEF and SemEval, it runs challenges that are specifically focused on Spanish NLP and semantic analysis of health texts.
i2b2	Provides datasets of completely de-identified notes from the Research Patient Data Registry at Partners and hosts popular yearly challenges. The project ran from 2004 until 2014.
n2c2	It is the continuation of i2b2 challenges, which started operating in 2018 and continues to run.
NTCIR	The NTCIR is a series of assessment conferences focusing on East Asian languages and English, supporting retrieval, question answering, text summarization, and text mining.
SemEval	SemEval, launched in 1998, is now an annual series of NLP challenges, incorporating diverse linguistic tasks and sometimes biomedical and clinical challenges.
TREC	TREC focuses on information retrieval and evaluation, including clinical tasks.

Table 3.2: Publicly available corpora as shared tasks

Corpus	Shared Task
ACTdb	Document Classification
CLIP	Sentence Classification
emrQA	QA
Harvey Corpus	NER
MADE 1.0	NER
MEDIQA	NLI, Summarization
MedNLI	NLI
Text2SQL	Text Generation

3.2.2 Datasets

Table 3.3 lists the Cross-Lingual Evaluation benchmarks that are mentioned in section 3.3.2. These corpora and tasks facilitate multilingual performance comparability.

Table 3.3: Cross lingual Evaluation benchmarks

Dataset	Full name	Tasks and languages facilitated
CoNLL-2002/3 [39]	Conference on Computational Natural Language Learning	Corpus for Language-independent NER in Spanish-Dutch (2002) and English-German (2003).
MLQA [40]	MultiLingual Question Answering dataset	Greek is not included among the seven supported languages.
TyDi QA [41]	Typologically Diverse Languages QA	Question answering. Greek is not included among the eleven supported languages.
XNLI [42]	Cross-lingual Natural Language Inference dataset	Greek language is included among the fourteen supported languages. The task involves the understanding of sentence relationships.
XQuAD [43]	Cross-lingual Question Answering Dataset	Question answering. Greek is included among the ten supported languages.

In addition to the benchmarks listed in Table 3.3, two other worth-mentioning extensive benchmarks that facilitate some of the mentioned are XGLUE [44] and XTREME [45].

XGLUE: Cross-lingual General Language Understanding Evaluation includes eleven tasks, including XNLI and MLQA, conducted in multiple languages (19 in total), with each task involving a subset of these. Greek is included in POS and XNLI.

XTREME: Cross-lingual TRansfer Evaluation of Multilingual Encoders is a massive benchmark with nine tasks, including XNLI, MLQA, XQuAD, and TyDi QA, spanning 40 languages. Greek is included.

The datasets used for assessing multilingual clinical entity recognition tasks discussed later are given in Table 3.4, with a focus on Spanish, which has been identified as the second most frequently applied language for such purposes following English.

More specifically:

- **Galen**: The corpus is private and includes 30.9K de-identified clinical oncology cases.
- **CANTEMIST**: The initial CANTEMIST Spanish corpus had 1,301 oncological clinical

Table 3.4: Monolingual clinical NLP evaluation corpora

Dataset	Full name	Language
Galen [46]	Galen oncology corpus	Spanish
Cantemist [47]	Cancer Text Mining in Spanish corpus	Spanish
PharmaCoNER [48]	Pharmacological Substances, Compounds and proteins	Spanish
ICTUSnet	-	Spanish
Real-MedNLP [49]	REAL document-based MEDical NLP	English, Japanese
BRONCO150	Berlin-Tubingen Oncology corpus	German
ChaDL [50]	Charite Discharge Letters	German
GGPONC [51]	German Guideline Program in Oncology NLP Corpus	German
SemClinBr [52]	Semantically Annotated Clinical Brazilian Portuguese	Portuguese
CLINpt [53]	Clinical Portuguese corpus	Portuguese
-	Silver Standard Biomedical Corpus for Arabic Language [54]	Arabic
Medmentions [55]	-	English
IDMedmentions	-	Indonesian
-	Korean NER dataset [56]	Korean
CLARO-NSCLC [57]	-	Italian

case reports. The 16,030 entities of tumor morphology in these studies were mapped into the eCIE-O ontology using 850 unique codes.

- **PharmaCoNER**: The PharmaCoNER corpus contains 1,000 clinical case reports in Spanish, covering oncology and cardiology. It contains 7,624 entity mentions, classified into four types: manually normalized chemical mentions, unnormalized ones, proteins and genes treated as a single entity, and unclear entities.

- **ICTUSnet**: Comprising 1,006 hospital discharge reports, this dataset pertains to patients admitted for stroke across 18 distinct Spanish hospitals. With over 79,000 annotations, it encompasses 51 diverse variables.

- **Real-MedNLP**: The Real-MedNLP dataset consists of five datasets, each serving a specific purpose. MedTxt-CR-JA contains 100 case reports in Japanese, later translated to English in MedTxt-CR-EN.

- **BRONCO150**: It is an anonymized corpus composed of sentences extracted from 150 discharge summaries originating from the oncology department. The annotations encompass the label: diagnosis, treatment, and medication.

- **ChaDL**: The corpus consists of 50 neurology-related discharge letters that include the

following entities: diagnosis, disorder, dosage, intake, medication, and procedure.

- **GGPONC**: The original GGPONC is made up of 8414 text sequences taken from 25 papers related to clinical guidelines for oncology. A specific subset of 4153 text sequences, considered a gold standard, contains annotations for seven UMLS terms.
- **SemClinBr**: It consists of 1000 clinical notes, annotated with 13 entities for NER and supports both the IOB2 and IOBES schemes.
- **CLINpt**: The dataset incorporates 281 clinical descriptions focused on neurology cases.
- **Silver Standard Biomedical Corpus for Arabic Language**: The dataset consists of 49,856 sentences and is annotated with 13 distinct semantic types. These types, including entities like "Disease or Syndrome" and "Therapeutic or Preventive Procedure", are identified within the sentences and align with entries in UMLS.
- **Medmentions**: It is an annotated biomedical corpus of 4.392 abstracts sourced from PubMed. One version of the dataset has basic annotation tags, one for each category: disease, technique, chemical, and anatomy.
- **IDMedmentions**: It is a non-annotated raw collection of biomedical publications. In the study described later, 2.069 papers were chosen to be annotated.
- **Korean NER dataset**: The dataset originates from a medical question-answering site, containing a total of 2189 sentences annotated with three entities: body parts, diseases, and symptoms.
- **CLARO-NSCLC**: This NER dataset is a subset of CLARO, with annotations for 25 clinical entities. It includes 758 clinical and radiology reports from 257 patients with Non-Small Cell Lung Cancer.

3.3 Applications

3.3.1 BERT-Based Models

The BERT architecture stands as a robust approach for constructing large models in the realm of clinical natural language processing. These models, which have been trained on large clinical corpora, serve as a basic core, allowing for additional fine-tuning to handle particular clinical demands. Among the several BERT-based designs, Clinical BERT and BioBERT stand out as the most popular solutions for fine-tuning. These models have become

Table 3.5: Clinical and Biomedical NLP Databases and Search Engines

Database Search Engine	Description
AMIce	The AMIce database includes modules devoted to German pharmaceutical items and substances, such as medication leaflets.
EMHJ	Eastern Mediterranean Health Journal is published by WHO and supports papers in English, Arabic and French.
JMPAS	The Journal of Medical and Pharmaceutical Sciences is an open-content journal.
LIVIVO	LIVIVO is a free search portal that offers access to scientific articles and information in a variety of subjects and languages, including biomedicine.
Medline	It is one of the world's largest and most popular biomedical literature databases. Medline offers a wide range of topics in the realm of medicine. The database, which contains references and abstracts from hundreds of biomedical publications, is an invaluable resource for researchers.
MedlinePlus	MedlinePlus is a Medline version intended for the general population, including patients and relatives.
PubMed	PubMed is a free search engine that primarily accesses the MEDLINE database of life sciences and biomedical references and abstracts.
Wikinews	Wikinews is a collaborative article platform that provides updated and reports on a wide range of topics, including health.
Wikipedia	Wikipedia serves as a large online encyclopedia as well as a search engine and database for biomedical and clinical text.

important alternatives for customizing pretrained BERT architecture for particular clinical objectives because of their performance.

BioBERT

BioBERT [58] is a specialized BERT-based language model designed for processing biomedical text. It is the first domain-specific BERT model pretrained on biomedical corpora, such as PubMed abstracts and PubMed Central full-text articles. With an architecture closely resembling BERT, BioBERT utilizes WordPiece tokenization to handle out-of-vocabulary words, and it uses the same vocabulary as BERT to ensure compatibility, allowing for fine-tuning on biomedical tasks while benefiting from BERT's general domain pre-training.

The model demonstrates its superiority over BERT and other state-of-the-art models in several key tasks, including named entity recognition, relation extraction, and question answering. For instance, in the research conducted in the original paper on the NER task, BioBERT achieved higher scores than BERT on all the datasets. More specifically, it outperformed the state-of-the-art models on 6 out of 9 datasets. These performance gains were attributed to various factors, including the utilization of an extensive biomedical corpus, de-

creased pre-training steps, and minimal architectural changes.

ClinicalBERT

ClinicalBERT [59], reported in 2019, was a groundbreaking BERT-based model designed exclusively for the clinical domain. It marked a crucial advancement by leveraging clinical data from the MIMIC III[1] dataset, which contains about 60.000 unique ICU EHRs from around 38.500 patients. The need for a specialized model like ClinicalBERT emerged from the inherent challenges of EHR data. Models trained on generic data, such as the original BERT, frequently underperform in this specialized area. This was demonstrated when ClinicalBERT outperformed BERT in tasks such as MLM and NSP within the clinical context.

ClinicalBERT is architecturally similar to BERT but contains more advanced semantic understanding and similarity training solutions. It does, however, come with its own set of restraints and limitations. Scaling is required to adequately capture dependencies in extensive clinical notes. Furthermore, because the MIMIC dataset is rather modest in size, it is frequently recommended to retrain the model on data particular to the hospital or healthcare institution to ensure best performance. In practice, ClinicalBERT has been effectively used for a variety of healthcare activities, including predicting hospital re-admissions within a 30-day window, where it outperformed other prominent approaches, especially in terms of recall.

GreekBERT

In addition to the widely recognized BERT-based models, a noteworthy inclusion for this thesis lies in the integration of GreekBERT [60], since it is centered on Greek clinical data.

GreekBERT is a monolingual NLP model created specifically for the Greek language. Because of its authors' computation restrictions, GreekBERT uses the BERT base-uncased version. Its training data set comprises Greek Wikipedia as well as Greek segments from both the Europal corpus and Oscar, a clean version of the Common Crawl corpus. GreekBERT's advantage lies in overcoming the challenges posed by the Greek alphabet and offering a language-specific solution. This contrasts with mBERT (1% Greek vocabulary) and XLM-R (2% Greek vocabulary), which have limited Greek representations. This is due to the Greek alphabet's divergence from the more commonly used alphabets.

On three fundamental NLP tasks, GreekBERT was compared against XLM-R and mBERT: POS tagging, named entity recognition, and natural language inference. For POS tagging, the XLM-R claimed the lead, with the other two models coming close behind. Because context

[1] https://paperswithcode.com/dataset/mimic-iii

isn't as crucial in Greek POS tagging, multilingual models were equivalent in strength, and tokenization in additional subwords wasn't an issue. In NER, Greek BERT outperformed the multilingual models. Also, XLM-R demonstrated an advantage over mBERT. As for NLI, Greek BERT was the one that achieved the best results, cementing its standing as a successful monolingual model for Greek.

Notably, the assessment did not specifically address any corpus for the health sector; nevertheless, future versions of Greek BERT will focus on wider datasets, including health-related data. While promising, caution is advised in extending these findings to health applications without specific evaluations in that domain. In summary, GreekBERT exhibited competitive results in a variety of NLP tasks, establishing itself as a powerful monolingual tool for the Greek language.

3.3.2 Multilingual Transformers

Several fundamental models have emerged as keystones for bridging language gaps and boosting the application of NLP in varied linguistic domains in the changing environment of multilingual natural language processing. Among these are the Multilingual BERT (mBERT) and XLM-RoBERTa (XLM-R). These models, which were trained on large datasets encompassing a wide range of languages, have shown great efficiency in biomedical applications.

Multilingual BERT

Multilingual BERT [61] is similar to BERT but trained on a diverse dataset of 104 languages, including Greek. This model excels at transferring knowledge and understanding across languages, even in zero-shot cross-lingual model transfer scenarios where the languages may differ in scripts or lack lexical overlap.

Its performance is best when languages share linguistic and structural similarities, although it doesn't learn systematic transformations for languages with different word orders. In particular, in Named Entity Recognition tasks, mBERT outperforms BERT and demonstrates superior deep semantic cross-lingual generalization. It can effectively handle code-switching, meaning the mixing of multiple languages within the same text, and even identify some translations among pairs of text, making it highly suitable for multilingual transfer tasks. However, there are some limitations to this model. It struggles with transliterated text and lacks internal structure to recognize the input language or distinguish specific aspects of translation pair representations. Because of its multilingual features, mBERT has been widely used in many different natural language processing (NLP) applications.

Cross-lingual Language Model - RoBERTa: XLM-R & XLM-$R_{XL/XXL}$

XLM-R [62] is a state-of-the-art multilingual masked language model trained on text from 100 languages. It uses SentencePiece with a unigram model. Unlike its competitors like mBERT and XLM, XLM-R uses a unique approach by relying on a clean CommonCrawl corpus instead of Wikipedia data. This approach provides richer information, especially for less-resourced languages. It has excelled in various cross-lingual tasks such as classification, sequence labelling, and question answering. It outperforms previous models on benchmarks like XNLI, CoNLL-2002, and CoNLL-2003. Notably, it shines for low-resource languages and competes well with strong monolingual models on benchmarks like GLUE.

XLM-R's primary objective was to improve cross-lingual language understanding. To achieve this, it has had to address challenges like the curse of multilinguality, ensuring overall performance doesn't degrade when adding more languages, managing vocabulary size, and adjusting model capacity. XLM-R's research shows that models like mBERT and XLM were underutilised, and simple improvements in unsupervised masked language modelling can yield substantial results.

Not long after employing XLM-R, researchers introduced two larger models, XLM-R_{XL} and XLM-R_{XXL} [63], which have about 100 times more parameters than the original XLM-R (3.5 billion and 10.7 billion parameters, respectively). They used the same training method and dataset as XLM-R and outperformed the original XLM-R in cross-lingual understanding and scored well on GLUE tasks. The larger models also excel in low-resource language understanding while maintaining good performance for widely spoken languages. Lastly, among many achievements, XLM-R_{XXL} achieved a new state-of-the-art performance for Greek on XQuad.

3.3.3 Biomedical NER with Multilingual Transformers

A plethora of research has explored the approach of leveraging the power of multilingual transformers with the aim of enhancing biomedical entity recognition. Notably, a preference has grown for the two multilingual transformers indicated. This section examines recent research, with an emphasis on studies conducted within the previous four years. Implementation of at least one of the two models—mBERT or XLM-R—is required for inclusion. For a complete comparison study, selected studies must also include at least a monolingual BERT-based baseline. Furthermore, even in the absence of a monolingual BERT-based model, research that directly compares the use of the two multilingual models is taken into account. Importantly, the research considered addresses a variety of languages, with English corpora

being excluded.

The analysis will begin by focusing on Spanish, which holds a dominant position in multilingual clinical NER research.

Guillermo López-García et al. [46] employed multilingual models, mBERT and XLM-R, along with BETO, which is a Spanish version of BERT, for named entity recognition. They trained mBERT and XLM-R first on Galen employing NSP and MLM, followed by fine-tuning on the evaluation dataset, CANTEMIST. The comparison between the original models and their more domain-specific counterparts revealed slightly enhanced results. Notably, mBERT and XLM-R exhibited identical performance when not trained on the Galen oncology dataset. Additionally, the authors implemented an ensemble method, combining each pair of models, and found that incorporating all three models in the ensemble yielded the most favorable results, surpassing the next best by a more notable difference of nearly 0.01%.

Regarding details in training, the IOB2 method was adhered to by using a fully connected layer followed by a softmax activation during the fine-tuning step. Notably, this study deviates from traditional methods in its evaluation process. Rather than assessing the predictions of the subwords by the transformers, the researchers first generated the word-level predictions by labeling the corresponding word with the maximum likelihood of its subword predictions. These labels were then used to calculate the model's performance using 2.1, 2.2, and 2.3.

Carrino et al. [64], in 2021, used effectively both clinical and biomedical data to train a monolingual model based on the RoBERTa architecture while managing a low-resource situation. Using cross-transfer methods with mBERT and BETO, they discovered that, despite their domain-specific model outperforming the fine-tuned BETO and mBERT, both BERTs produced competitive results. Their model's performance was attributed to its larger vocabulary overlap and greater domain knowledge. Another notable discovery is that, with the exception of PharmaCoNER, mBERT outperformed BETO across the two other datasets, CANTEMIST and ICTUSnet.

Important information is that two variants of MLM approaches were used in the pre-training stage: SubWord Masking (SWM) and Whole Word Masking (WWM). Also, a linear layer was used as the classification layer for the NER fine-tuning, and the BIO scheme for annotations. Finally, as in the previous research, the 2.1, 2.2, and 2.3 metrics were employed for evaluation.

The following year, the same researchers conducted another study [65] with the same objective, this time using large corpora of Spanish EHRs and biomedical texts. They compared, among others, BETO, mBERT, mBERT Galen, and XLM-R Galen models to their

newly trained models. Because of the expanded training corpus, results favored the new monolingual model. Notably, mBERT, mBERT Galen, and XLM-R Galen performed poorer but closer to the novel model across the three evaluation datasets that were the same as the previous research. In fact, XLM-R Galen exhibited the highest performance within the clinical corpus and mBERT outperformed the mBERT Galen version in two out of the three NLP tasks. This performance highlighted the difficulties in identifying which model would outperform the others when pretraining is performed on a small dataset.

Continuing upon their previous findings, only WWM was employed, and in the fine-tuning process, the same standard technique was followed for both metrics selection and model adjustment, as well as the annotation scheme.

Villaplana's study [66] included Spanish Named Entity Recognition that corresponded with the eHealth-KD 2021 competition objectives. Their particular emphasis was on the detection of uncommon entities. For that reason, they improved their monolingual NER model by using data augmentation methodologies, particularly back translation, which includes translating to produce synthetic data. In contrast to previous techniques, Villaplana et al. used more strict metrics, as reflected by the formulas 2.4, 2.5, and 2.3. In addition to using Spanish pretrained models, such as BETO, they expanded their investigation to include mBERT. Surprisingly, despite being fine-tuned exclusively for the challenge's original Spanish dataset, mBERT outperformed BETO. This discovery highlights mBERT's durability and efficacy as a model pretrained on larger corpora.

Despite the current tendency in Spanish-related research to favor robust monolingual BERT-based models over multilingual ones, it is worth noticing that multilingual models are still used by academics in the Spanish linguistic environment. This is indicative of the competitive performance of multilingual transformers, even in the presence of substantial Spanish corpora.

Continuing our investigation, it is intriguing to delve into languages with more limited linguistic resources and models, where multilingual transformers become especially important for effective natural language processing. One research paper will be addressed for each language—Portuguese, Arabic, Indonesian, Japanese, German, Korean, and Italian—to investigate the use and impact of transformers in these distinct linguistic NER settings.

Schneider et al. [67] built three models for Portuguese clinical NER by fine-tuning mBERT using two medium-sized corpora, one centered on clinical content and the other on biomedical data. Their domain-specific model performed better than mBERT when compared to various versions of mBERT and Portuguese BERT. In turn, mBERT performed better than Portuguese

BERT in both datasets. The research emphasizes that the extreme difference between the initial pretraining corpus and the following fine-tuning one caused catastrophic forgetting, thus this outcome of underperformance.

The token classification head from the Hugging Face API was used for NER fine-tuning, with a linear layer serving as the head. Token-level categorization was carried out. They used a multi-classification technique for the two datasets: SemClinBr with the IOB2 scheme and CLINpt with the IOBES scheme. In addition to the conventional metrics, the statistical significance of the model differences was evaluated using the Friedman and Wilcoxon tests.

Moving on to Arabic, AraBERT, an Arabic adaptation of BERT, was utilized by Boudjellal et al. [68] for biomedical NER. For pretraining, the researchers used PubMed, MedlinePlus, and two other Arabic literature sources, and for fine-tuning, they used a silver biomedical tagged corpus. Focusing only on "Disease or Syndrome" and "Therapeutic or Preventive Procedure" entities, their model achieved the best performance, surpassing its predecessor, while mBERT showed comparatively weaker results. The methods employed to apply the models were typical, with nothing novel. This study once again emphasized the impactful role of pretraining, even on a smaller domain-specific corpus.

Purwitasariet et al. [69] conducted noteworthy research on the Indonesian language. Researchers implemented biomedical NER with three different settings: zero-shot, monolingual, and multilingual. The second technique relied on subsets of IDMedmentions, while the third used both Medmentions and IDMedmentions. The study found that XLM-R outperformed mBERT and emphasized the practical use of the mixed language context, confirming that multilingual models perform well in such settings. Furthermore, a comparison with IndoBERT, a monolingual BERT-based model for Indonesian, indicated lower performance than mBERT. In terms of setting, the researchers chose relaxed matching. This approach recognizes a single detected entity as right, regardless of its kind ("B" or "I").

The NCTIR-16 Real-MedNLP Task is another great example of multilingual model performance in Japanese. One NICTmed team [70] participated in two subtasks in both English and Japanese. For the first subtask, characterized as a low-resource NER task in the MedTxt-CR corpus, they utilized multilingual models, namely mBERT and XLM-R. Impressively, the team secured the third position in this. During evaluation, XLM-R outperformed mBERT in terms of F1 scores in Japanese. The team emphasized that multilingual models demonstrated similar NER performance in English and Japanese, even with limited data resources.

Along with the standard settings for evaluating and optimizing the models, the researchers also tried to implement corrective methods in response to the models' predictions. If the

projected entity of the model had no beginning "B" and only had "I", then there was a selection to ignore the entity or change the first word to "B". Their research showed that using the first strategy (I to O) produced better outcomes than using the second strategy (I to B). Overall, the modifications in XLM-R were successful in improving the data. Corrections, however, were not always helpful for mBERT and frequently produced less than ideal results.

Continuing, one study was conducted in German [50]. Researhers' major conclusion was that while training from scratch with little data proved ineffective, large general pretrained transformers can perform noticeably well in similar tasks when fine-tuned. To gather data for model training, researchers used Wikipedia, AMIce, and LIVIVO. Meanwhile, NER assessment was conducted using three benchmarks: BRONCO150, GGPONC, and ChaDL. BioGott-BERT, a German BERT model that produced the greatest results, was yet another monolingual BERT model. Interestingly, in the evaluation, mBERT was lower even from the baseline, a Bi-LSTM CRF model, in terms of performance.

Additional observations about the performances include that the frequency of each entity type and the size of the pretraining corpus were important factors in the models' performance. The NER assignment was completed in a normal manner without any noteworthy settings that set it apart.

Kim et al. [71] applied KM-BERT, their own model pretrained with MLM and NSP, to a self-constructed Korean medical corpus. This corpus was generated from textbooks, papers, journals, and health news. The researchers compared KM-BERT with mBERT and KR-BERT across various tasks. Notably, in the NER task on the Korean NER dataset, KM-BERT, initialized with KR-BERT weights, outperformed the others. Interestingly, the version of KM-BERT with an additional vocabulary of clinical terminology performed worse than the version without this augmentation.

Finally, Paolo et al. [57] utilized BioBIT, a pre-trained BioBERT model, to perform NER in the Italian biomedical domain. Their study focused on a subset of the CLARO dataset and compared their model (MedBIT_r3) with mBERT and another Italian BERT-based model, umBERTO. Results demonstrated that MedBIT_r3 outperformed the other models. The authors employed standard fine-tuning and opted for a focal loss function to address class imbalance in their experiments.

In conclusion, while observing promising outcomes with both monolingual and multilingual models, there persists a distinct gap in NER research for non-English languages. Notably, the competitive or even superior performance of multilingual models, as evidenced in scenarios like Spanish where they outshine language-specific models such as BETO, sug-

gests that opting for multilingual models may offer a more practical avenue for advancing NER tasks in languages with limited resources. Drawing parallels, the adaptability of models like GreekBERT to the Greek language can be envisioned as akin to BETO's role in Spanish, highlighting the potential of multilingual models to enhance NER capabilities.

Chapter 4

Idea and Approach

4.1 Methodology

In addressing the scarcity of Greek language benchmarks and the limited annotations within the available dataset (approximately 400 samples), the methodology revolves around leveraging multilingual models, namely mBERT and XLM-R, alongside the Greek monolingual model, GreekBERT. The initial step involves fine-tuning these models on the annotated dataset to adapt them to the nuances of the Greek language and the specific domain under consideration.

4.2 Adaptation and Integration

In terms of specific adaptations required for the models, one crucial adjustment involves the incorporation of metadata associated with each patient document as additional input during the NER process. This inclusion of metadata aims to enhance the accuracy of NER, especially when dealing with sparsely annotated data.

When considering the incorporation of additional information directly into the input, a special token is utilized to distinguish the extra information from the sentences intended for annotation. This approach provides valuable contextual information to the model, aiding in the identification of entities within the primary sentence. While alternative methods to integrate extra information exist, this straightforward approach offers a clear mechanism to enhance NER accuracy.

The complexity of the dataset, where EHRs contain abstract descriptions of labels at a document level, represents a unique intricacy. To the best of my knowledge, the intricacy of such a dataset, where labels are not only present within the text but also described abstractly at the document level, has not been explored in academic literature.

4.3 Expected Outcomes

Since the focus of the named entity recognition task revolves around identifying entities in the Greek healthcare domain without delving into further categorization, it is anticipated that the NER models fine-tuned on the annotated dataset will exhibit promising performance in entity identification.

Predicting which specific model—mBERT, XLM-R, or GreekBERT—will outperform the others is challenging due to the limited research on the Greek language in the clinical NER context. Unlike other languages, Greek poses unique linguistic challenges, making assumptions about model performance premature. Existing literature, as explored in related work, suggests that multilingual models demonstrate competitive performance compared to some monolingual models. Notably, examples like BETO versus mBERT and XLM-R showcase instances where multilingual models outperform or closely match the performance of monolingual counterparts.

All in all, while the comparative performance of mBERT, XLM-R, and GreekBERT remains uncertain, it is anticipated that the results will give valuable insights to the field of NER in the Greek language.

Chapter 5

Implementation and Experimentation

5.1 Data Collection

5.1.1 Origin and Specifics of the Dataset

Our team got access to a database of discharge letters from the cardiac sector of the "PAPANIKOLAOU" tertiary hospital, which had initially been collected for the CardioMining study [72]. The selection criteria were consistent with the CardioMining study, targeting patients who were discharged from the hospital, survived the hospital stay, and had their EHRs electronically entered in the hospital's systems.

Additionally, the data in this sample were neither de-identified nor annotated. In total, there were approximately 6,500 electronic discharge letters in the dataset that our team was given. These documents adhered to a semi-structured template, which included sections of information related to the hospital, the patient, and their doctors.

Below is a description of the document's units:

- Hospital Information: At the top of each document, there is a section for hospital information. This section typically includes the hospital name, the clinical unit, and the director's full name.

- Patient Information (Στοιχεία Ασθενούς): The section provides standard demographic information, like the patient's full name and age. Supplementary details, such as the social security number and paternal information, may be included. Additionally, this segment systematically records the precise dates of both patient admission and discharge.

- History – Objective Examination (Ιστορικό – Αντικειμενική Εξέταση): This part contains the most important data related to the patient's admission. It contains a brief summary of the patient's medical history, the cause for admission, any noted conditions that

call for hospitalization, and any relevant tests that were performed at the moment of admission.

- Course of the Disease (Πορεία Νόσου): This section describes how the patient's medical condition has changed over time. Throughout the patient's hospital stay, it frequently contains information about symptom changes, the effectiveness of the treatment, and any noteworthy occurrences or turning points in the disease's progression.

- Discharge Diagnosis (Διάγνωση Εξόδου): The identified medical diagnosis is provided in this sector; however, its inclusion in the EHR is not always certain.

- Treatment Plan & Discharge Instructions (Θεραπευτική αγωγή & Οδηγίες κατά την έξοδο): This section contains information about any medications that are prescribed, including the dosage, frequency, and instructions given to the patient. These guidelines encompass a wide range of medical advice, including the necessity for regular heart exams, medication administration, and nutritional suggestions.

- Laboratory/Clinical Tests (Εργαστηριακές/Παρακλινικές εξετάσεις): Not every test is included here, but when it is, the results—including numerical values and comments—are directly recorded in the text file to provide a brief summary of the patient's clinical and laboratory findings.

- Doctor Information: The last section of the document contains the complete names of the physicians who evaluated the patient, including the director, as well as certain hospital contact details.

It is worth noting that, while explicit annotations were not included in the data, descriptions of document-level entities were. These descriptions were standardized, and we received an accompanying Excel sheet that listed them in columns. Each document was assigned a "1" if the associated columns were present and a "0" otherwise. This Excel sheet served as a guide to identify the inclusion or exclusion of specific document-level entities throughout the dataset.

For instance, if a document-level descriptor is "**ΣΑΚΧΑΡΩΔΗΣ ΔΙΑΒΗΤΗΣ ΤΥΠΟΥ 2**" for a document, a corresponding phrase in it's text could be: "Ο ασθενής πάσχει από **ΣΔ 2**." In this instance, the document-level description is "ΣΑΚΧΑΡΩΔΗΣ ΔΙΑΒΗΤΗΣ ΤΥΠΟΥ 2", while the corresponding mention in the text is "ΣΔ 2". Similarly, the document-level description "**ΟΣΣ** (δεν αναφέρεται η κατηγορία)", could show up in the text as "Ελαβε πλήρη αγωγή **οξέως στεφανιαίου συνδρόμου**". Table 5.1 provides additional examples.

Table 5.1: Examples of metadata in EHRs

Document-level Descriptor	Corresponding Text Expression
ΣΑΚΧΑΡΩΔΗΣ ΔΙΑΒΗΤΗΣ ΤΥΠΟΥ 2	... πάσχει από **ΣΔ 2** ...
ΟΣΣ (δεν αναφέρεται η κατηγορία)	... αγωγή **οξέως στεφανιαίου συνδρόμου** ...
ΘΩΡΑΚΙΚΟ ΑΛΓΟΣ/ΔΥΣΦΟΡΙΑ	... προσήλθε με αναφερόμενο **άλγος επιγάστριου, με επέκταση στο θώρακα** και στα άνω άκρα ...
ΘΩΡΑΚΙΚΟ ΑΛΓΟΣ/ΔΥΣΦΟΡΙΑ & ΕΜΕΤΟΣ/ΤΑΣΗ ΓΙΑ ΕΜΕΤΟ	... **προκαρδιακό άλγος** και **εμετό** και ...
history of ΣΤΕΦΑΝΙΑΙΑ ΝΟΣΟΣ & prior OEM	... ιστορικό: **σν-οεμ** ...

Despite the absence of any efforts to structure the texts for machine compatibility, these descriptions can become quite useful. The unconventional effort by medical professionals may not reduce preprocessing time, but it does serve as useful metadata, providing insights into each document.

5.1.2 Prepossessing and Anonymization

There were three major steps to the preprocessing. First, all documents were transformed into a common text format with a consistent structure and preliminary anonymization. In the second phase, these files were de-identified, and in the third phase they were matched to the given Excel file to guarantee proper metadata alignment.

Step 1: Obtaining the final text files

The initial dataset included documents in diverse formats, including doc and docx, which caused compatibility issues with our annotation tool. So, all documents were converted to text format. In particular, only the doc and docx formats were carried over from the original forms—doc, docx, pdf, odt, ott, and rtf—because the rest consisted of just 116 files and required much more time to preprocess. This conversion was intended to improve compatibility and consistency in the later steps of processing.

Following the conversion of files into text format, the preprocessing phase centered on evaluating the integrity of the resulting text files. Duplicate files were detected and deleted by comparing their MD5 hashes. Furthermore, rigorous checks were performed to ensure that all files followed the intended format and corrected any potential flaws, ensuring the dataset's quality and correctness.

However, not all files were retained in the dataset. When eliminating files that did not follow the hospital's standards, special attention was paid to identifying the most common

section titles, which were mostly written in capital letters. Files with insufficient information or written in English were purposefully omitted to maintain the dataset's integrity. The sections examined in the texts, listed in alphabetical order, are given in Table 5.2:

Table 5.2: Sections in Texts

Greek Section	**English Translation**
ΑΙΤΙΑ ΕΙΣΟΔΟΥ – ΑΝΤΙΚΕΙΜΕΝΙΚΗ ΕΞΕΤΕΤΑΣΗ - ΙΣΤΟΡΙΚΟ	Reason for Admission - Objective Examination - History
ΕΡΓΑΣΤΗΡΙΑΚΕΣ ΕΞΕΤΑΣΕΙΣ	Laboratory Tests
ΕΞΕΤΑΣΕΙΣ	Examinations
ΙΣΤΟΡΙΚΟ – ΑΝΤΙΚΕΙΜΕΝΙΚΗ ΕΞΕΤΑΣΗ	History - Objective Examination
Λοιπές εξετάσεις	Other Examinations
ΟΔΗΓΙΕΣ ΚΑΤΑ ΤΗΝ ΕΞΟΔΟ - ΠΑΡΑΤΗΡΗΣΕΙΣ	Instructions at Discharge - Observations
ΠΑΡΑΚΛΙΝΙΚΕΣ ΕΞΕΤΑΣΕΙΣ	Clinical Examinations
ΠΟΡΕΙΑ ΝΟΣΟΥ	Course of Illness
ΣΤΟΙΧΕΙΑ ΑΣΘΕΝΟΥΣ	Patient Information
ΘΕΡΑΠΕΥΤΙΚΗ ΑΓΩΓΗ - ΕΠΕΜΒΑΣΕΙΣ	Treatment - Interventions

In that preprocessing phase, the accepted files were required to contain at least one of the noted sections (excluding "ΣΤΟΙΧΕΙΑ ΑΣΘΕΝΟΥΣ" - Patient Information) to be considered valid and move to the next phase. The same sections were also used in the tokenization process, as described in Section 5.4.1. In this step, an early amount of anonymization was performed by deleting the "Patient Information" section from all files. Additionally, any content following the keywords "Ο Διευθυντής", "Ο/Η", which typically contained doctors' information, was also deleted.

As for the checks, keywords such as "ΑΜΚΑ" (Social Security Number), "Διεύθυνση" (Address), "Όνομα Πατρός" (Father's Name), "Ονομα" & "Επωνυμο" (First and Last Name), "Διεύθυνση" (Address), "Διευθυντης" (Director), "Επιβλέπον" (Supervisor), "Επιμελητής" (Attending), "Ειδικευόμενος" (Resident), and similar terms were searched inside the final texts to ensure the privacy of patients and healthcare professionals. Notably, incomplete forms of the keywords were examined to provide full confirmation, leaving no room for variants that may risk individuals' anonymity.

Step 2: De-identification

The initial annotation performed in step 1 was insufficient since some files had additional sensitive information, such as phone numbers and names of doctors, hospitals, or registry offices, which were more difficult to locate. While more keywords aided in detecting a large number of them, manual intervention was required to ensure accurate anonymization of the

texts intended to be given for annotation. Although the overall dataset was not completely anonymized, patient and doctor information was not included. Table 5.3 lists particular keywords and instances of the additional automatic deidentification.

Table 5.3: Anonymization Keywords and Examples

Keyword	Example	Anonymized Form
ΣΤΟΙΧΕΙΑ ΑΣΘΕΝΟΎΣ	-	Skip the section entirely.
'Ο Διευθυντής', 'Ο/Η'	-	Remove all lines after these keywords.
Hospital Names	...την καρδιολογική του ΓΝ "xxx xxx"...	Each flagged word was replaced with xxx.
Keywords that followed by hospital names	...Διακομίσθηκε από το ΓΝ xxx...	The next sequence after the keyword was replaced with xxx.
Phone numbers	...(τηλ. Επικοινωνίας για ραντεβού: xxxxx)...	Every sequence of numbers in the flagged row was replaced with xxxxx.

Step 3: Matching the final texts with the Excel file

After converting the files into text format, matching them with the Excel file posed numerous challenges. Matching conditions were based on name, surname, date of admission, and date of release, requiring each document to have all of this information align with the Excel data. Challenges, such as mixed lettering (English-Greek) in names or missing conditions, were identified. Ultimately, only 4,091 of the 5.194 EHRs initially given met the criterion. While this tight matching method reduced the dataset, it assured the validity and correctness of the information that was kept. Table 5.4 is showing the evolution of file count at each stage.

Table 5.4: Evolution of Document Files

Stage	EHR Count
Initial (doc, docx, pdf, odt, ott, rtf)	6.449
After transformation into text format	6.253
Final (semi-de-identified and ready for matching)	5.194
Matched	4.091

5.2 Annotation process

5.2.1 Annotation tool selection

In our effort to assist the domain experts in annotating the data for our research, we explored various annotation tools. Our top choices were Brat, Inception, Prodigy, and Doccano. Among

these options, we selected Doccano [73] for our annotation needs. These tools were evaluated based on a combination of general factors, including their ability for label set customization, collaboration features, and aspects related to export and cost, as well as specific criteria based on our research assets, including their ability to handle document-specific metadata label sets, their support for the Greek language, and their user-friendliness for non-technical users.

The sections below explain how Doccano meets the requirements in each area:

- Customizable label set:

  The necessity of allowing a customizable label set within a tool is rooted in the diverse nature of annotation tasks. A one-size-fits-all approach to labelling cannot effectively provide the wide range of concepts, entities, and categories that different projects demand. By permitting users to customize the label set to their specific context, the tool becomes capable of addressing domain-specific requirements, such as having the ICD-10 code label set.

  Each of the considered tools possessed the capability to customize label sets.

- Document-level label sets:

  The decision to prioritize document-specific metadata label sets was primarily driven by the context of our pre-existing dataset, where each individual document already had associated labels. Given that, coupled with the extensive size of the cardiological ICD-10 codes, it became apparent that expecting our experts to punctiliously sift through and select from the lengthy range of cardio ICD labels would be impractical and time-consuming.

  In a non-streamlined approach, an expert annotator would be required to manually review each electronic health record and choose relevant labels from the large label set for each specific diagnosis, procedure, or symptom mentioned in the document without any prior knowledge. This usually involves scrolling through an extensive list of potential labels, cross-referencing codes, and making individual selections.

  In our streamlined approach, the annotators initially consulted the given prior data, i.e., the associated labels of each respective document, and attempted to match them with specific segments of the electronic health record. During this process, if something was incorrect, they would change or delete the ICD code entirely. Finally, they would review the entire document for segments that require entities that might have been missed in the previous research. It's important to note that they weren't supposed to rely merely on the document-level labels; they had to use them as a guide to ease the entire process.

Doccano was a tool that allowed the inclusion of metadata within each text. Although they appeared as text, they provided enough information for the annotators to follow the predefined steps previously outlined.

- Language support:

  Exploiting an annotation tool that substantiates the specific language being annotated is of major importance. Languages are not uniform; they hold idiosyncratic linguistic attributes, including grammar structures, vocabulary intricacies, and contextual subtleties. When annotating text, understanding and accurately capturing these unique elements is paramount to achieving high-quality results. A tool designed specifically for the language can provide valuable grammatical hints, syntax suggestions, and contextually relevant prompts. This guidance significantly empowers annotators, enabling them to structure annotations in alignment with the language's inherent grammar rules.

  Although suggestions were not needed for our task, having support for UTF-8 encoding was imperative. The availability of language-specific characters within a tool is an absolute prerequisite for rendering an annotation task feasible. This capability is non-negotiable, as it forms the foundation upon which the entire annotation process relies.

- User-Friendly Interface:

  Ensuring the user-friendliness of a manual annotation tool is important, particularly when the task involves domain experts who often lack familiarity with such tools and technical proficiency. "User-friendly" covers a range of attributes that collectively create an accessible and pleasant experience throughout various stages of tool utilization. This means simplifying or completely avoiding the installation process, sparing users from convoluted steps like setting up virtual machines or navigating complex configurations. It extends to the interface's comprehensibility, ensuring that users can understand the tool's functionalities effortlessly, regardless of their technical background.

  In our case, we opted to manage the installation process internally by setting up a virtual machine on a server provided by our university. By configuring the server in this manner, cardiologists could log in using their designated accounts and immediately begin the annotation task without the need for any additional actions or steps. Moreover, we made sure to give clear instructions on how to use the tool. The chosen tool itself also had easy-to-follow guidelines. Our goal was to make it as simple as possible for them to start using the tool for the annotation task, minimizing any confusion.

- Collaboration Features:

In general, collaborative features are highly beneficial for a tool. They open the door for parallel annotations by multiple annotators, significantly saving time. We leveraged collaborative features in our tool to facilitate simultaneous logins for multiple users, allowing them to engage in the same document simultaneously. To achieve this, we disabled the "share annotation among all users" feature so the tool would display the tagged text only to the respective users and not universally, and we assigned each document to two different annotators.

- Export and Integration:

  When preparing a dataset for training a NER model or any NLP task, the format of the dataset is pivotal to ensuring that the data can be effectively used for training and evaluation. Integration with other tools or platforms can also be beneficial. JSON format is ideal for NER tasks, as it enables the inclusion of necessary details such as the document's ID and text, the start and end position of each span and its associated tags (the ICD codes), and even comments in a structured and, most importantly, functional way.

  Doccano enabled easy import and export of annotated data in such a JSON format.

- Cost and Licensing:

  Cost plays a vital role in the selection process by judging by the value-to-benefit ratio of a product or service. In our context, where funds were limited, cost became a critical factor. As students, we were naturally inclined to prioritize free options or, if applicable, solutions that were budget friendly. Doccano was a suitable choice in this regard.

5.2.2 Integration of annotations

To streamline the process, as mentioned earlier, we leveraged a virtual machine provided by our university and deployed Doccano at "http://cardiocoding.csd.auth.gr/". Subsequently, we conducted tests to ensure the seamless functioning of the system, validating aspects such as test annotated datasets and exporting functionalities. Following this, we created four user accounts, each assigned to one of our four annotators, including the two doctors with whom we collaborated and two students designated by them.

To optimize the annotation task, we allocated 250 Electronic Health Records to each annotator, with each EHR assigned to two annotators for cross-verification. Given the doctor's domain-specific expertise, instructions pertaining to such matters were assigned to them at

their own initiative. Unfortunately, due to time constraints, only 382 EHRs were double-annotated.

The final label set consisted of 766 ICD-10 codes, and it was primarily focused on cardiology codes. Other than that, specific codes requested by doctors were incorporated during the annotation process, further refining the label set to align with their practical needs.

For the concatenation of annotations to construct the final dataset, we employed a straightforward approach. The initial step involved identifying overlapping and non-overlapping spans between the annotations of different annotators. Spans without contradictions were preserved in their original form, while for overlapping spans, we selected the most encompassing boundaries, considering various scenarios for their final coding.

More specifically, in instances where codes were entirely different and belonged to distinct general categories, we conducted a manual collection and constructed a third opinion. This third opinion was derived collaboratively from all three team members and an additional expert in the field.

Algorithm 1: Handling Spans of Annotations

Input : Annotations' spans of two different annotators: $span_1$ and $span_2$

Output: Final span boundaries: $start_f$ and end_f

if $span_1$ *and* $span_2$ *are overlapping* **then**

  $start_f \leftarrow \min(\text{start of } span_1, \text{start of } span_2)$

  $end_f \leftarrow \max(\text{end of } span_1, \text{end of } span_2)$

else

  $start_{f_1}, end_{f_1} \leftarrow$ start and end of $span_1$ $start_{f_2}, end_{f_2} \leftarrow$ start and end of $span_2$

end

return $start_f, end_f$ *or* $start_{f_1}, end_{f_1}, start_{f_2}, end_{f_2}$

On the other side, for spans within the same general category, simple logic was applied. In cases where one code was general (comprising only the first four alphanumeric characters) and the other was more specialized, we opted for the more specialized code. We saw a higher level of correctness with the more specialized code, implying that the other annotator may not have scrutinized it thoroughly. Conversely, in situations where codes belonged to the same category but differed in specificity, we selected the more generalized code. This choice aimed to encompass both cases, ensuring coverage without selecting an incorrect code.

The provided algorithms 2 and 1 clearly present all of the specifics of these decisions.

Algorithm 2: Handling Differences in Annotations

```
Input  : ICD-10 codes of two different annotators: c_i and c_j
Output: Final codes of span c_f
if c_i and c_j correspond to overlapping spans (identical or overlapping) then
    if c_i and c_j belong in the same general category (first three digits are the same) then
        if c_i is general and c_j is specialized then
            c_f ← c_j
        end
        else if c_i is specialized and c_j is general then
            c_f ← c_i
        end
        else if c_i and c_j are both specialized then
            c_f ← code of the general category
        end
    else
        if thirdOpinion = "Both are correct" then
            c_f ← c_i
        end
        else if thirdOpinion = "One is correct" then
            if first annotator is correct then
                c_f ← c_i
            end
            else if second annotator is correct then
                c_f ← c_j
            end
        end
    end
else
    c_f1 ← c_i c_f2 ← c_j
end
return c_f or c_f1, c_f2
```

5.3 Final Dataset Summary

The dataset, as shown in Table 5.5, consists of 382 records, with 267 selected for training, 57 for validation, and 58 for testing. Table 5.6 displays EHR annotations, providing specific information on annotation patterns. The number of annotations per EHR varies, ranging from 1 to 29. Each EHR contains an average of 10.17 annotations, adding up to a total of

3,886 annotations in the dataset.

Split	Size
Total	382
Train	267
Validation	57
Test	58

Table 5.5: Size of Final Dataset Splits

Table 5.6: EHR-wise Annotation Statistics

Metric	Value
Minimum Annotations per EHR	1
Maximum Annotations per EHR	29
Average Annotations per EHR	10.17
Total Annotations in Dataset	3,886

To be clear, each annotation in the annotation analysis in table 5.6 corresponds to a sequence labeled with a single ICD-10 code. For the purpose of this thesis, the focus was solely on the extraction and conversion of annotation positions into the IOB2 scheme, disregarding the more detailed information offered by ICD-10 codes. In this scheme, a single class named "ENTITY" was selected, and the labels include "B-ENTITY" for the beginning word of an entity, "I-ENTITY" for words inside an entity, and "O" for all other non-entity words.

Now let's look at the metadata statistics. Specifically, the number of additional labels per document varies from 0 to 15, with an average of 7.424 labels. Figure 5.1 visualizes this distribution.

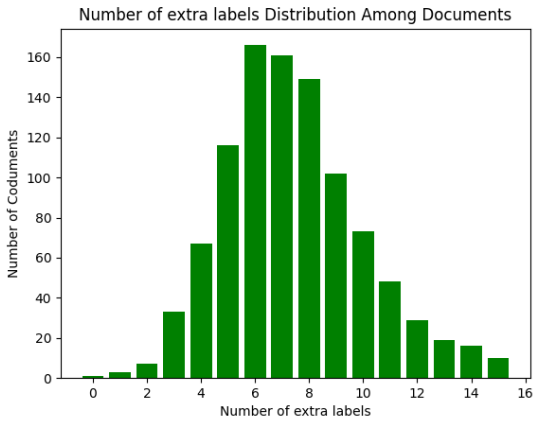

Figure 5.1: Extra labels distribution

Figure 5.2 illustrates the direct matching of these extra labels inside the text. The x-axis shows the percentage of document-level descriptions included in the text for each document. For example, if a document has 10 descriptions and only 2 of them are found in the text, the x-axis value is 0.2. The y-axis indicates the number of documents corresponding to each percentage, which gives a clear picture of the distribution throughout the dataset. The purpose of creating this figure is to demonstrate that the extra labels are not always present in the text precisely as marked. As previously noted, this divergence is to be expected, particularly in the context of clinical terms.

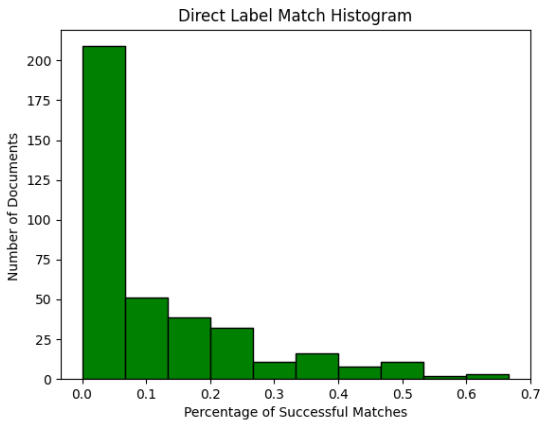

Figure 5.2: Direct matching of extra labels in text

5.4 Splitting

Preparing data inputs for transformers became challenging due to token constraints, as transformers typically accept 512 or 1024 tokens. To improve the splitting, a two-step strategy was followed. Initially, the dataset was partitioned into sections. Subsequently, each section was further divided into sentences. The additional step improved the splitting process.

5.4.1 Sections

A simple keyword-based technique was used to get started with splitting the dataset into smaller parts. This involved using specific keywords defined in Table 5.2 to indicate section boundaries. This strategy allowed a straightforward split of the dataset, in line with its stated criteria. More information about the splitting is given in Table 5.7.

Table 5.7: Section Split Statistics

Metric	Train	Validation	Test
Number of Instances	267	57	58
Max Sections	9	9	9
Min Sections	5	5	5
Avg Sections	7.74	7.63	7.638
Total Sections	2,067	435	443

5.4.2 Sentences

Five tokenizers were investigated for the second stage of splitting: NLTK punkt, CliniTokenizer, spaCy, MedSpaCy, and Stanza. They were evaluated on their capacity to handle difficult patterns, including not splitting abbreviations, even though not all of them supported Greek. Stanza and MedSpaCy performed the best out of all the tokenizers evaluated. That said, Stanza [74] was chosen in the end due to its Greek support. Table 5.8 presents the results of the sentence splitting using the Stanza tokenizer.

Table 5.8: Sentence Split Statistics

Metric	Train	Validation	Test
Number of Instances	267	57	58
Max Sentences	54	46	46
Min Sentences	11	12	12
Avg Sentences	24.96	24.053	23.83
Total Sentences	6,664	1,371	1,382

5.5 Model Deployment

5.5.1 Construction of Inputs

Initially, the extra information was tokenized in the desired format, with separators added in between each extra label. The maximum length was to be calculated through this approach and then declared as a threshold. The number of instances that would be shortened was calculated and found to be insignificant. Notable, despite XLM-R's ability to accept 1024 tokens, the approach remained consistent among the models, resulting in all final tokenized inputs having a length of 512. For the thresholds, see Table 5.9.

	mBERT			**XLM-R**			**GreekBERT**		
	Train	**Validation**	**Test**	**Train**	**Validation**	**Test**	**Train**	**Validation**	**Test**
Max Sentence Length	458	303	367	396	254	291	331	212	220
Max Extra Info Length	195	135	148	149	101	113	95	63	70
Cut off thresholds	317	377	364	363	411	399	417	449	442
Elements > Threshold	8	0	1	1	0	0	0	0	0

Table 5.9: Thresholds and Lengths in mBERT, XLM-R, and GreekBERT

The input was then generated with the help of those thresholds using Algorithm 3 for the two BERT models, while the similar methodology was used for XLM-R, but with different special tokens: [sep] was represented as </s>, [cls] as <s>, and [pad] as <pad>. All in all, the specific special tokens designated for each model were adhered to.

An example of each model's tokenization output is shown in Table 5.11, which also shows how effectively each tokenizer handles Greek words. This could be an indication of the extent to which they perceive Greek.

Algorithm 3: Constructing Formatted Input for BERT models for train set

Input : Sentence $sent_{i,j}$ of document j: $sent_{i,j}$, Extra labels of document j: $extra_j$ (Format: $[extra_1][SEP][extra_2][SEP]...[extra_d][SEP]$)

Output: Final inputs of mBERT $input_{i,j}$

```
max_length_train ← 0;
for document j in train_set do
    max_length_train ← max(max_length_train, length of extra_j);
end
for document j in train_set do
    for sent_{i,j} in document j do
        if length(sent_{i,j}) < 512 − max_length_train then
            padded_sentence ← pad(sent_{i,j}, 512 − max_length_train);
            input_{i,j} ← concatenate(padded_sentence, extra_j);
        end
        else
            truncated_sentence ← truncate(sent_{i,j}, 512 − max_length_train);
            input_{i,j} ← concatenate(truncated_sentence, extra_j);
        end
    end
end
return input_{i,j}
```

Model	**Tokenization Output**
GreekBERT	[CLS] ιστοριικο – αντικειμενικη εξε ##τε ##ταση η ασθενης προσηλ ##θε λογω οξεια ##ς δυσπνοια ##ς ...
mBERT	[CLS] I ##Σ ##T ##O ##P ##I ##K ##O [UNK] A ##N ##T ##I ##K ##E ##I ##M ##E ##N ##I ##K ##H E ##Ξ ##E ##T ##E ##T ##A ##Σ ##H H α ##σ ##θε ##νής π ##ρο ##σή ##λ ##θε λ ##ο ##γ ##ω ο ##ξει ##ας δ ##υ ##σ ##π ##νο ##ια ##ς ...
XLM-R	<s> _ ΙΣ ΤΟ ΡΙ ΚΟ _– _ ΑΝΤ ΙΚ ΕΙ Μ ΕΝ ΙΚΗ _Ε Ξ ΕΤΕ ΤΑ ΣΗ _Η _ασθενή ς _προσ ήλθε _λογ ω _ οξ ειας _δυσ π νοια ς ...

Table 5.11: Comparison of Tokenization Output

5.5.2 Fine-tuning

The following versions of the three models from the Transformers library were used:

Position	Token(s)	Attention Mask
0	[CLS]	1
1-71	ΑΝΤΙΚΕΙΜΕΝΙΚΗ ΕΞΕΤΕΣΗ Προσήλθε με αναφερόμενο **συσφιγκτικό άλγος** διάρκειας ωρών με αυτόματη ύφεση, από 20 ημέρου.	1
72	[PAD]	0
...	...	...
316	[PAD]	0
317	[SEP]	1
318-334	Θωρακικο αλγος (in cl. άτυπο)	1
335	[SEP]	1
336-349	Θωρακικο αλγος / δυσφορια	1
350	[SEP]	1
351-361	History of στεφανιαια νοσος	1
362	[SEP]	1
363-364	Prior PCI	1
364	[SEP]	1
365	[PAD]	0
...	[PAD]	0
511	[PAD]	0

Table 5.10: Input format mBERT train example

- **mBERT**: "bert-base-multilingual-cased"
- **XLM-R**: "xlm-roberta-base"
- **GreekBERT**: "nlpaueb/bert-base-greek-uncased-v1"

All the experiments were conducted using the NVIDIA Tesla T4 GPU available in Google Colab. To guarantee reproducibility, particularly in tasks involving batch processing, a fixed random seed of 42 was consistently applied with PyTorch across all trials. Also, the training process assessment was made easier with the use of Weight and Biases[1], which was used for tracking a variety of metrics and parameters.

For every given model, two datasets were put to use: one with the extra information as described in Section 5.5.1 and the other without it. This comparison approach was applied to assess the impact of additional information on the model's performance and to quantify its contribution.

The Hugging Face Transformers library's pre-trained transformer models with a token classification head built as a linear layer were used in the fine-tuning procedure. Due to computational limitations, training was carried out in batches of four, with cross-entropy loss as a metric for adjusting weights and optimizing hyperparameters of Table 5.12. More

[1]https://wandb.ai/site

specifically, the cross-entropy loss was calculated for the first part of the input, corresponding to the sentences.

Table 5.12: Hyper-parameter Values for Fine-Tuning

Hyper-parameter	**Value**
Learning Rate	4e-6, 8e-6, 9e-6, 1e-5, 2e-5, 3e-5, 4e-5, 5e-5, 8e-5
Optimizer	AdamW
Scheduler	Linear
Warming steps	0.1
Weight Decay	0.01
Batch Size	4
Epochs	10
Patience	3
Max Grad Norm	3
Criterion	CrossEntropyLoss

Chapter 6

Results and Discussion

6.1 Results

Table 6.1 presents the best hyperparameters for each model, and Table 6.2 shows the evaluation and test metrics for those hyperparameters in terms of macro F1, precision, and recall.

	Parameters	
	Learning Rate	Epoch
m_BERT	3e-5	2
mBERT_no_extra	2e-5	2
XLM-R	2e-5	2
XLM-R_no_extra	2e-5	2
Greek_BERT	2e-5	2
Greek_BERT_no_extra	4e-6	5

Table 6.1: Model's best parameters

Model	**Validation**			**Test**		
	F1	**P**	**R**	**F1**	**P**	**R**
mBERT	0.9176	0.9182	0.9171	0.9230	0.9097	0.9380
mBERT_no_extra	0.8544	0.8561	0.8531	**0.8857**	0.8675	0.9059
XLM-R	0.9180	0.9169	0.9191	**0.9296**	0.9186	0.9417
XLM-R_no_extra	0.8485	0.8651	0.8332	0.8737	0.8685	0.8797
GreekBERT	0.9259	0.9282	0.9236	0.9284	0.9262	0.9305
GreekBERT_no_extra	0.8430	0.8685	0.8200	0.8652	0.8732	0.8574

Table 6.2: Final model results

6.1.1 Models without descriptions

Table 6.3 compares the performance of the three models trained without additional descriptions: mBERT_no_extra, XLM-R_no_extra, and GreekBERT_no_extra. In the validation set, mBERT_no_extra achieved an F1 score of 85.44%, followed by XLM-R_no_extra with 84.85%

and GreekBERT_no_extra with 84.30%. Moving on to the test set, mBERT_no_extra retains its lead with an F1 score of 88.57%, while XLM-R_no_extra is close behind with 87.37% and GreekBERT_no_extra follows in with 86.52%.

Model	Validation			Test		
	F1	**P**	**R**	**F1**	**P**	**R**
mBERT_no_extra	0.8544	0.8561	0.8531	**0.8857**	0.8675	0.9059
XLM-R_no_extra	0.8485	0.8651	0.8332	0.8737	0.8685	0.8797
GreekBERT_no_extra	0.8430	0.8685	0.8200	0.8652	0.8732	0.8574

Table 6.3: Model results for mBERT_no_extra, XLM-R_no_extra and GreekBERT_no_extra

6.1.2 Models with descriptions

Table 6.4 compares the performance of the three models trained with additional descriptions: mBERT, XLM-R, and GreekBERT. During the validation phase, XLM-R achieved an F1 score of 91.80%, with mBERT behind at 91.76% and GreekBERT dominating with 92.59%. In the final testing, mBERT lagged behind with an F1 score of 92.30%, whereas XLM-R emerged as the top performer with an F1 score of 92.96%, followed closely by GreekBERT with a slightly lower score of 92.84%.

Model	Validation			Test		
	F1	**P**	**R**	**F1**	**P**	**R**
mBERT	0.9176	0.9182	0.9171	0.9230	0.9097	0.9380
XLM-R	0.9180	0.9169	0.9191	**0.9296**	0.9186	0.9417
GreekBERT	0.9259	0.9282	0.9236	0.9284	0.9262	0.9305

Table 6.4: Model results for mBERT, XLM-R and GreekBERT

6.1.3 Models with descriptions versus models without descriptions

As expected, the models trained with extra descriptions perform significantly better than those trained without these additional inputs, as shown in Table 6.5. On average, the models with descriptions outperform their counterparts in the test set by around 6%, with the most significant improvement shown in GreekBERT, where the F1 score jumped by 6.8% when the descriptions were included.

Model	Validation F1	Test F1
mBERT	91.76%	92.30%
mBERT_no_extra	85.44%	88.57%
XLM-R	91.80%	92.96%
XLM-R_no_extra	84.85%	87.37%
GreekBERT	92.59%	92.84%
GreekBERT_no_extra	84.30%	86.52%

Table 6.5: Comparison of models with and without Descriptions

6.2 Discussion

Aside from the apparent variations in performance between models trained with and without descriptions, it's interesting to note that discrepancies across models within the same context vary greatly.

For the models without descriptions, the differences between the various models were more pronounced, indicating significant variability in their performance. Conversely, for models trained with descriptions, the differences were minimal, suggesting a convergence in their performance. This finding suggests that adding extra information through descriptions can offer models a boost, facilitating convergence towards similar performance levels. That is, the supplementary information provided by descriptions likely aids in refining the models' understanding and interpretation of the data, resulting in more consistent outcomes.

Furthermore, the performance of multilingual models relative to their monolingual counterparts contradicted initial assumptions. Despite initial expectations favoring monolingual models due to their presumed advantage in language specificity, multilingual models consistently outperformed them. While the variations in performance between multilingual and monolingual models were minor, their constant superiority indicates that variables other than language specificity play an important role in model performance. This outcome highlights the robustness and adaptability of multilingual models across diverse scenarios.

Finally, estimating model performance beforehand is challenging. The variability in performance outcomes across different model architectures highlights the need for empirical evaluation and validation. Especially in contexts with low-resource languages or where monolingual models fall short, multilingual models are indispensable.

Chapter 7

Conclusions and Future Work

7.1 Conclusions

Overall, this thesis focuses on using transformer-based monolingual and multilingual models to get weak span-level NER supervision. This technique is intended for developing NER and NEL models for clinical coding. Within this framework, the presence of extra descriptions has a substantial impact on the models' performance when recognizing entities inside the text. Models trained with extra descriptions systematically outperform those trained without them. This shows that the contextual information given by the extra descriptions helps the models understand and identify entities in the text.

7.2 Future Work

A major limitation of this study is its reliance on a single dataset with a specific structure. In other words, the scarcity of alternative datasets suitable for comparison, which stems from the unique structure of the dataset used in this study, presents a challenge in sourcing comparable alternatives. However, if such datasets become available in the future, this research could be extended to encompass broader analyses and comparisons.

Additionally, the dataset used in this study was relatively small in scale, limiting the breadth of the analysis. Consequently, the exploration of larger annotated datasets, particularly in the Greek language, holds promise for more comprehensive research endeavors. This might include either adding to the existing dataset through annotation efforts or finding comparable datasets with larger amounts of data.

Furthermore, integrating a broader array of output entities relevant to clinical settings, such as medical conditions and treatments, has the potential to significantly improve clinical coding. Although these entities may not align perfectly with established clinical coding standards initially, their incorporation can enrich the model's comprehension of the primary

categories. This heightened understanding of critical categories can serve as a valuable foundation for achieving more precise matches with ICD codes during the subsequent stages of the coding process.

Bibliography

[1] Thomas Handler, Rick Holtmeier, Jane Metzger, J. Marc Overhage, Sheryl Taylor, and Charlene Underwood. Himss electronic health record definitional model version 1.0. *HIMSS Electronic Health Record Committee*, 01 2003.

[2] RS Evans. Electronic health records: Then, now, and in the future. *Yearb Med Inform*, Suppl 1(Suppl 1):S48–61, May 20 2016. doi: 10.15265/IYS-2016-s006.

[3] JE Rodnick. Should the complete medical record be computerized in family practice? an opposing view. *J Fam Pract*, 30(4):460–4, Apr 1990.

[4] BG Regan. Computerised information exchange in health care. *Med J Aust*, 154(2):140–4, Jan 21 1991.

[5] Office of the National Coordinator for Health Information Technology. National trends in hospital and physician adoption of electronic health records. `https://www.healthit.gov/data/quickstats/national-trends-hospital-and-physician-adoption-electronic-health-records`, 2023. Health IT Quick-Stat #61.

[6] J. Everson, V. Patel, A. W. Bazemore, and R. L. Jr. Phillips. Interoperability among hospitals treating populations that have been marginalized. *Health Services Research*, 58 (4):853–864, Aug 2023. doi: 10.1111/1475-6773.14165. URL `https://doi.org/10.1111/1475-6773.14165`. Epub 2023 May 23.

[7] Gregory Parker and Christopher Parker. Future of electronic health records: A challenge to maximize their utility. May 23 2023. doi: 10.2139/ssrn.4457214. URL `https://ssrn.com/abstract=4457214`.

[8] Dimitrios G. Katehakis and Angelina Kouroubali. A framework for the consistent management of ehealth interoperability in greece. In *International Conference on Enterprise Information Systems*, 2019. URL `https://api.semanticscholar.org/CorpusID:174803671`.

[9] NA Goulas et al. Epirus-net: a wireless health telematics network in greece. In *Proceedings of the 23rd annual EMBS international conference*, 2001. URL https://apps.dtic.mil/sti/pdfs/ADA411499.pdf. [Accessed 09.09.2021].

[10] DG Katehakis et al. An environment for the creation of an integrated electronic health in hygeianet, the regional health telematics network of crete. In *Proceedings of the 16th annual towards an electronic patient record conference & exhibition, your connection to electronic healthcare*, volume 1, pages 89–98, 2000.

[11] Evangelia LAPPA, Aristofanis PAGANAS, Vasiliki GKARMIRI, Ourania GIATA, and Dimitrios KARAPOULIOS. E-health: Evaluation of the implementation of the personal electronic health record by family doctors in greece. *One Health & Risk Management*, 3 (2), February 2022. doi: 10.38045/ohrm.2022.2.01. URL https://doi.org/10.38045/ohrm.2022.2.01.

[12] Overview of the national laws on electronic health records in the eu member states and their interaction with the provision of cross-border ehealth services contract, 2014. URL https://health.ec.europa.eu/system/files/2016-11/laws_greece_en_0.pdf.

[13] Jennie Shepheard and Andrea Groom. The role of health classifications in health information management. *Health Information Management Journal*, 49(2-3):83–87, 2020. doi: 10.1177/1833358320905970. URL https://doi.org/10.1177/1833358320905970.

[14] Luke Roberts, Solomon Araromi, and Oliver Peatman. Clinical coding - an insight into healthcare data. *The British Student Doctor*, 2(2):36–43, 2018. doi: 10.18573/bsdj.48.

[15] James Blundell. Health information and the importance of clinical coding. *Anaesthesia & Intensive Care Medicine*, 24(2):96–98, 2023. ISSN 1472-0299. doi: https://doi.org/10.1016/j.mpaic.2022.12.006. URL https://www.sciencedirect.com/science/article/pii/S1472029922002946.

[16] Patricia T. Aalseth. *Medical Coding: What It Is and How It Works*. Jones & Bartlett Learning, 2006.

[17] R.T. Sutton, D. Pincock, D.C. Baumgart, and et al. An overview of clinical decision support systems: benefits, risks, and strategies for success. *npj Digit. Med.*, 3:17, 2020. doi: 10.1038/s41746-020-0221-y.

[18] Sebastian D. Kafke, Adelheid Kuhlmey, Julian Schuster, and et al. Can clinical decision

support systems be an asset in medical education? an experimental approach. *BMC Med Educ*, 23:570, 2023. doi: 10.1186/s12909-023-04568-8.

[19] James J. Cimino. Desiderata for controlled medical vocabularies in the twenty-first century. *Methods of Information in Medicine*, 37:394 – 403, 1998. URL `https://api.semanticscholar.org/CorpusID:39094303`.

[20] Kathy Brouch. Where in the world is icd-10? *Journal of AHIMA*, 71(8):52–57, 2000. URL `https://library.ahima.org/doc?oid=58621`.

[21] Laxmaiah Manchikanti, Frank J E Falco, and Joshua A Hirsch. Ready or not! here comes icd-10. *Journal of NeuroInterventional Surgery*, 5(1):86–91, October 2011. ISSN 1759-8486. doi: 10.1136/neurintsurg-2011-010155. URL `http://dx.doi.org/10.1136/neurintsurg-2011-010155`.

[22] N. Hosseini, K. Kimiafar, S.M. Mostafavi, B. Kiani, K. Zendehdel, A. Zareiyan, and S. Eslami. Factors affecting the quality of diagnosis coding data with a triangulation view: A qualitative study. *International Journal of Health Planning and Management*, 36: 1666–1684, 2021. doi: 10.1002/hpm.3254. URL `https://onlinelibrary.wiley.com/doi/abs/10.1002/hpm.3254`.

[23] V. Alonso, J. V. Santos, M. Pinto, J. Ferreira, I. Lema, F. Lopes, and A. Freitas. Problems and barriers during the process of clinical coding: a focus group study of coders' perceptions. *J Med Syst*, 44(3):62, 2020. doi: 10.1007/s10916-020-1532-x.

[24] F. Asadi, M. Ahmadi Hosseini, T. Gomar, and A. Sabahi. Factors affecting clinical coding errors. *Shiraz E-Medical Journal*, 23(9):e122161, 2022. doi: 10.5812/semj-122161. URL `https://brieflands.com/articles/semj-122161.html`.

[25] Yongxin Liao, Mario Lezoche, Hervé Panetto, and Nacer Boudjlida. Semantic annotation model definition for systems interoperability. 2011.

[26] Sean Bechhofer, Leslie Carr, Carole Goble, Simon Kampa, and Timothy Miles-Board. The semantics of semantic annotation. pages 1152–1167, 11 2002. ISBN 978-3-540-00106-5. doi: 10.1007/3-540-36124-3_73.

[27] Eyal Oren, Knud Möller, Simon Scerri, Siegfried Handschuh, and Michael Sintek. What are semantic annotations. 01 2006.

[28] Nasser Alshammari and Alanazi Saad. The impact of using different annotation schemes on named entity recognition. *Egyptian Informatics Journal*, 2020. ISSN 1110-8665. doi: https://doi.org/10.1016/j.eij.2020.10.004. Publisher Copyright: © 2020.

[29] Srinivasa Rao Kundeti, J Vijayananda, Srikanth Mujjiga, and M Kalyan. Clinical named entity recognition: Challenges and opportunities. In *2016 IEEE International Conference on Big Data (Big Data)*, pages 1937–1945, 2016. doi: 10.1109/BigData.2016.7840814.

[30] Nancy Chinchor and Beth Sundheim. MUC-5 evaluation metrics. In *Fifth Message Understanding Conference (MUC-5): Proceedings of a Conference Held in Baltimore, Maryland, August 25-27, 1993*, 1993. URL `https://aclanthology.org/M93-1007`.

[31] Dzmitry Bahdanau, Kyunghyun Cho, and Yoshua Bengio. Neural machine translation by jointly learning to align and translate. *CoRR*, abs/1409.0473, 2014. URL `https://api.semanticscholar.org/CorpusID:11212020`.

[32] Ashish Vaswani, Noam M. Shazeer, Niki Parmar, Jakob Uszkoreit, Llion Jones, Aidan N. Gomez, Lukasz Kaiser, and Illia Polosukhin. Attention is all you need. In *Neural Information Processing Systems*, 2017. URL `https://api.semanticscholar.org/CorpusID:13756489`.

[33] Vitor Alcantara Batista and Alexandre Gonçalves Evsukoff. Application of transformers based methods in electronic medical records: A systematic literature review, 2023.

[34] Katikapalli Subramanyam Kalyan, Ajit Rajasekharan, and Sivanesan Sangeetha. Ammu : A survey of transformer-based biomedical pretrained language models, 2021.

[35] Jacob Devlin, Ming-Wei Chang, Kenton Lee, and Kristina Toutanova. Bert: Pre-training of deep bidirectional transformers for language understanding, 2019.

[36] Ashish Vaswani, Noam Shazeer, Niki Parmar, Jakob Uszkoreit, Llion Jones, Aidan N Gomez, Ł ukasz Kaiser, and Illia Polosukhin. Advances in neural information processing systems, attention is all you need. volume 30. Curran Associates, Inc., 2017. URL `https://proceedings.neurips.cc/paper_files/paper/2017/file/3f5ee243547dee91fbd053c1c4a845aa-Paper.pdf`.

[37] Guillaume Lample and Alexis Conneau. Cross-lingual language model pretraining, 2019.

[38] Haoyang Huang, Yaobo Liang, Nan Duan, Ming Gong, Linjun Shou, Daxin Jiang, and Ming Zhou. Unicoder: A universal language encoder by pre-training with multiple cross-lingual tasks, 2019.

[39] Erik F. Tjong Kim Sang. Introduction to the CoNLL-2002 shared task: Language-independent named entity recognition. In *COLING-02: The 6th Conference on Natural Language Learning 2002 (CoNLL-2002)*, 2002. URL https://aclanthology.org/W02-2024.

[40] Patrick Lewis, Barlas Oguz, Ruty Rinott, Sebastian Riedel, and Holger Schwenk. Mlqa: Evaluating cross-lingual extractive question answering. *ArXiv*, abs/1910.07475, 2020. doi: 10.18653/v1/2020.acl-main.653.

[41] Jonathan H. Clark, Eunsol Choi, Michael Collins, Dan Garrette, Tom Kwiatkowski, Vitaly Nikolaev, and Jennimaria Palomaki. TyDi QA: A benchmark for information-seeking question answering in typologically diverse languages. *Transactions of the Association for Computational Linguistics*, 8:454–470, 2020. doi: 10.1162/tacl_a_00317. URL https://aclanthology.org/2020.tacl-1.30.

[42] Alexis Conneau, Guillaume Lample, Ruty Rinott, Adina Williams, Samuel R. Bowman, Holger Schwenk, and Veselin Stoyanov. Xnli: Evaluating cross-lingual sentence representations. In *Conference on Empirical Methods in Natural Language Processing*, 2018. URL https://api.semanticscholar.org/CorpusID:52271711.

[43] Mikel Artetxe, Sebastian Ruder, and Dani Yogatama. On the cross-lingual transferability of monolingual representations. pages 4623–4637, 01 2020. doi: 10.18653/v1/2020.acl-main.421.

[44] Yaobo Liang, Nan Duan, Yeyun Gong, Ning Wu, Fenfei Guo, Weizhen Qi, Ming Gong, Linjun Shou, Daxin Jiang, Guihong Cao, Xiaodong Fan, Ruofei Zhang, Rahul Agrawal, Edward Cui, Sining Wei, Taroon Bharti, Ying Qiao, Jiun-Hung Chen, Winnie Wu, Shuguang Liu, Fan Yang, Daniel Campos, Rangan Majumder, and Ming Zhou. XGLUE: A new benchmark dataset for cross-lingual pre-training, understanding and generation. In Bonnie Webber, Trevor Cohn, Yulan He, and Yang Liu, editors, *Proceedings of the 2020 Conference on Empirical Methods in Natural Language Processing (EMNLP)*, pages 6008–6018, Online, November 2020. Association for Computational Linguistics. doi: 10.18653/v1/2020.emnlp-main.484. URL https://aclanthology.org/2020.emnlp-main.484.

[45] Junjie Hu, Sebastian Ruder, Aditya Siddhant, Graham Neubig, Orhan Firat, and Melvin Johnson. Xtreme: A massively multilingual multi-task benchmark for evaluating cross-lingual generalization, 2020.

[46] Guillermo López-García, José M. Jerez, Nuria Ribelles, Emilio Alba, and Francisco J. Veredas. Detection of tumor morphology mentions in clinical reports in spanish using transformers. In Ignacio Rojas, Gonzalo Joya, and Andreu Català, editors, *Advances in Computational Intelligence*, pages 24–35, Cham, 2021. Springer International Publishing. ISBN 978-3-030-85030-2.

[47] Antonio Miranda-Escalada, Eulàlia Farré, and Martin Krallinger. Named entity recognition, concept normalization and clinical coding: Overview of the cantemist track for cancer text mining in spanish, corpus, guidelines, methods and results. In *IberLEF@SEPLN*, 2020. URL `https://api.semanticscholar.org/CorpusID:225063173`.

[48] Aitor Gonzalez-Agirre, Montserrat Marimon, Ander Intxaurrondo, Obdulia Rabal, Marta Villegas, and Martin Krallinger. PharmaCoNER: Pharmacological substances, compounds and proteins named entity recognition track. In Kim Jin-Dong, Nédellec Claire, Bossy Robert, and Deléger Louise, editors, *Proceedings of the 5th Workshop on BioNLP Open Shared Tasks*, pages 1–10, Hong Kong, China, November 2019. Association for Computational Linguistics. doi: 10.18653/v1/D19-5701. URL `https://aclanthology.org/D19-5701`.

[49] Shuntaro Yada, Yuta Nakamura, Shoko Wakamiya, and Eiji Aramaki. Real-mednlp: Overview of real document-based medical natural language processing task subtasks. 06 2022.

[50] Manuel Lentzen, Sumit Madan, Vanessa Lage-Rupprecht, Lisa Kühnel, Juliane Fluck, Marc Jacobs, Mirja Mittermaier, Martin Witzenrath, Peter Brunecker, Martin Hofmann-Apitius, Joachim Weber, and Holger Fröhlich. Critical assessment of transformer-based AI models for German clinical notes. *JAMIA Open*, 5(4):ooac087, 11 2022. ISSN 2574-2531. doi: 10.1093/jamiaopen/ooac087. URL `https://doi.org/10.1093/jamiaopen/ooac087`.

[51] Florian Borchert, Christina Lohr, Luise Modersohn, Thomas Langer, Markus Follmann, Jan Philipp Sachs, Udo Hahn, and Matthieu-P. Schapranow. GGPONC: A corpus of German medical text with rich metadata based on clinical practice guidelines. In Eben Holderness, Antonio Jimeno Yepes, Alberto Lavelli, Anne-Lyse Minard, James Pustejovsky, and Fabio Rinaldi, editors, *Proceedings of the 11th International Workshop on Health Text Mining and Information Analysis*, pages 38–48, Online, November 2020. Association for Computational Linguistics. doi: 10.18653/v1/2020.louhi-1.5. URL `https://aclanthology.org/2020.louhi-1.5`.

[52] Lucas Emanuel Silva e Oliveira, Ana Carolina Peters, Adalniza Moura Pucca da Silva,

Caroline P. Gebeluca, Yohan Bonescki Gumiel, Lilian Mie Mukai Cintho, Deborah Ribeiro Carvalho, Sadid A. Hasan, and Claudia Maria Cabral Moro. Semclinbr – a multi institutional and multi specialty semantically annotated corpus for portuguese clinical nlp tasks. 2020. doi: 10.1186/s13326-022-00269-1.

[53] Lucas Emanuel Silva e Oliveira, Ana Carolina Peters, Adalniza Moura Pucca da Silva, Caroline P. Gebeluca, Yohan Bonescki Gumiel, Lilian Mie Mukai Cintho, Deborah Ribeiro Carvalho, Sadid A. Hasan, and Claudia Maria Cabral Moro. Semclinbr – a multi institutional and multi specialty semantically annotated corpus for portuguese clinical nlp tasks. 2020. doi: 10.1186/s13326-022-00269-1.

[54] Hussein Awdeh, Adelle Abdallah, Gilles Bernard, Mohammad Hajjar, and Mazen El-Sayed. A silver standard arabic corpus for segmentation and validation. In *International Conference on Big Data and Cyber-Security Intelligence*, 2019. URL `https://api.semanticscholar.org/CorpusID:219850550`.

[55] Sunil Mohan and Donghui Li. Medmentions: A large biomedical corpus annotated with umls concepts, 2019.

[56] Young-Min Kim and Tae-Hoon Lee. Korean clinical entity recognition from diagnosis text using bert. *BMC Medical Informatics and Decision Making*, 20:242, 09 2020. doi: 10.1186/s12911-020-01241-8.

[57] Domenico Paolo, Alessandro Bria, Carlo Greco, Marco Russano, Sara Ramella, Paolo Soda, and Rosa Sicilia. Named entity recognition in italian lung cancer clinical reports using transformers. pages 4101–4107, 12 2023. doi: 10.1109/BIBM58861.2023.10385778.

[58] Jinhyuk Lee, Wonjin Yoon, Sungdong Kim, Donghyeon Kim, Sunkyu Kim, Chan Ho So, and Jaewoo Kang. Biobert: a pre-trained biomedical language representation model for biomedical text mining. 2019. doi: 10.1093/bioinformatics/btz682.

[59] Kexin Huang, Jaan Altosaar, and Rajesh Ranganath. Clinicalbert: Modeling clinical notes and predicting hospital readmission, 2019.

[60] John Koutsikakis, Ilias Chalkidis, Prodromos Malakasiotis, and Ion Androutsopoulos. Greek-bert: The greeks visiting sesame street. 2020. doi: 10.1145/3411408.3411440.

[61] Telmo Pires, Eva Schlinger, and Dan Garrette. How multilingual is multilingual BERT? In Anna Korhonen, David Traum, and Lluís Màrquez, editors, *Proceedings of the 57th Annual Meeting of the Association for Computational Linguistics*, pages 4996–5001, Florence,

Italy, July 2019. Association for Computational Linguistics. doi: 10.18653/v1/P19-1493. URL https://aclanthology.org/P19-1493.

[62] Alexis Conneau, Kartikay Khandelwal, Naman Goyal, Vishrav Chaudhary, Guillaume Wenzek, Francisco Guzmán, Edouard Grave, Myle Ott, Luke Zettlemoyer, and Veselin Stoyanov. Unsupervised cross-language representation learning at scale. In Dan Jurafsky, Joyce Chai, Natalie Schluter, and Joel Tetreault, editors, *Proceedings of the 58th Annual Meeting of the Association for Computational Linguistics*, pages 8440–8451, Online, July 2020. Association for Computational Linguistics. doi: 10.18653/v1/2020.acl-main.747. URL https://aclanthology.org/2020.acl-main.747.

[63] Naman Goyal, Jingfei Du, Myle Ott, Giri Anantharaman, and Alexis Conneau. Larger-scale transformers for multilingual masked language modeling. In Anna Rogers, Iacer Calixto, Ivan Vulić, Naomi Saphra, Nora Kassner, Oana-Maria Camburu, Trapit Bansal, and Vered Shwartz, editors, *Proceedings of the 6th Workshop on Representation Learning for NLP (RepL4NLP-2021)*, pages 29–33, Online, August 2021. Association for Computational Linguistics. doi: 10.18653/v1/2021.repl4nlp-1.4. URL https://aclanthology.org/2021.repl4nlp-1.4.

[64] Casimiro Pio Carrino, Jordi Armengol-Estapé, Asier Gutiérrez-Fandiño, Joan Llop-Palao, Marc Pàmies, Aitor Gonzalez-Agirre, and Marta Villegas. Biomedical and clinical language models for spanish: On the benefits of domain-specific pretraining in a mid-resource scenario, 2021.

[65] Casimiro Pio Carrino, Joan Llop, Marc Pàmies, Asier Gutiérrez-Fandiño, Jordi Armengol-Estapé, Joaquín Silveira-Ocampo, Alfonso Valencia, Aitor Gonzalez-Agirre, and Marta Villegas. Pretrained biomedical language models for clinical NLP in Spanish. In Dina Demner-Fushman, Kevin Bretonnel Cohen, Sophia Ananiadou, and Junichi Tsujii, editors, *Proceedings of the 21st Workshop on Biomedical Language Processing*, pages 193–199, Dublin, Ireland, May 2022. Association for Computational Linguistics. doi: 10.18653/v1/2022.bionlp-1.19. URL https://aclanthology.org/2022.bionlp-1.19.

[66] Aitana Villaplana, Raquel Martínez, and Soto Montalvo. Improving medical entity recognition in spanish by means of biomedical language models. *Electronics*, 12(23), 2023. ISSN 2079-9292. doi: 10.3390/electronics12234872. URL https://www.mdpi.com/2079-9292/12/23/4872.

[67] Elisa Terumi Rubel Schneider, João Vitor Andrioli de Souza, Julien Knafou, Lucas

Emanuel Silva e Oliveira, Jenny Copara, Yohan Bonescki Gumiel, Lucas Ferro Antunes de Oliveira, Emerson Cabrera Paraiso, Douglas Teodoro, and Cláudia Maria Cabral Moro Barra. BioBERTpt - a Portuguese neural language model for clinical named entity recognition. In Anna Rumshisky, Kirk Roberts, Steven Bethard, and Tristan Naumann, editors, *Proceedings of the 3rd Clinical Natural Language Processing Workshop*, pages 65–72, Online, November 2020. Association for Computational Linguistics. doi: 10.18653/v1/2020.clinicalnlp-1.7. URL `https://aclanthology.org/2020.clinicalnlp-1.7`.

[68] Nada Boudjellal, Huaping Zhang, Asif Khan, Arshad Ahmad, Rashid Naseem, Jianyun Shang, and Lin Dai. Abioner: A bert-based model for arabic biomedical named-entity recognition. *Complex.*, 2021:6633213:1–6633213:6, 2021. URL `https://api.semanticscholar.org/CorpusID:232283435`.

[69] Diana Purwitasari, Abid Famasya Abdillah, Safitri Juanita, and Mauridhi Hery Purnomo. Transfer learning approaches for indonesian biomedical entity recognition. In *2021 13th International Conference on Information Communication Technology and System (ICTS)*, pages 348–353, 2021. doi: 10.1109/ICTS52701.2021.9608496.

[70] Masao Ideuchi, Masatoshi Tsuchiya, Yiran Wang, and Masao Utiyama. Nictmed at the ntcir-16 real-mednlp task. In *NTCIR 2022 (Workshop)*, 2022.

[71] Yoojoong Kim, Jong-Ho Kim, Jeong Moon Lee, Moon Joung Jang, Yunjin Yum, Seong Eon Kim, Unsub Shin, Young-Min Kim, Hyung Joon Joo, and Sanghoun Song. A pre-trained bert for korean medical natural language processing. *Scientific Reports*, 12, 2022. URL `https://api.semanticscholar.org/CorpusID:251622631`.

[72] A. Samaras, A. Bekiaridou, AS Papazoglou, and et al the CardioMining Study Group. Artificial intelligence-based mining of electronic health record data to accelerate the digital transformation of the national cardiovascular ecosystem: design protocol of the cardiomining study. *BMJ Open*, 13:e068698, 2023. doi: 10.1136/bmjopen-2022-068698.

[73] Tobias Daudert. A web-based collaborative annotation and consolidation tool. In Nicoletta Calzolari, Frédéric Béchet, Philippe Blache, Khalid Choukri, Christopher Cieri, Thierry Declerck, Sara Goggi, Hitoshi Isahara, Bente Maegaard, Joseph Mariani, Hélène Mazo, Asuncion Moreno, Jan Odijk, and Stelios Piperidis, editors, *Proceedings of the Twelfth Language Resources and Evaluation Conference*, pages 7053–7059, Marseille, France, May 2020. European Language Resources Association. ISBN 979-10-95546-34-4. URL `https://aclanthology.org/2020.lrec-1.872`.

[74] Peng Qi, Yuhao Zhang, Yuhui Zhang, Jason Bolton, and Christopher D. Manning. Stanza: A python natural language processing toolkit for many human languages, 2020.