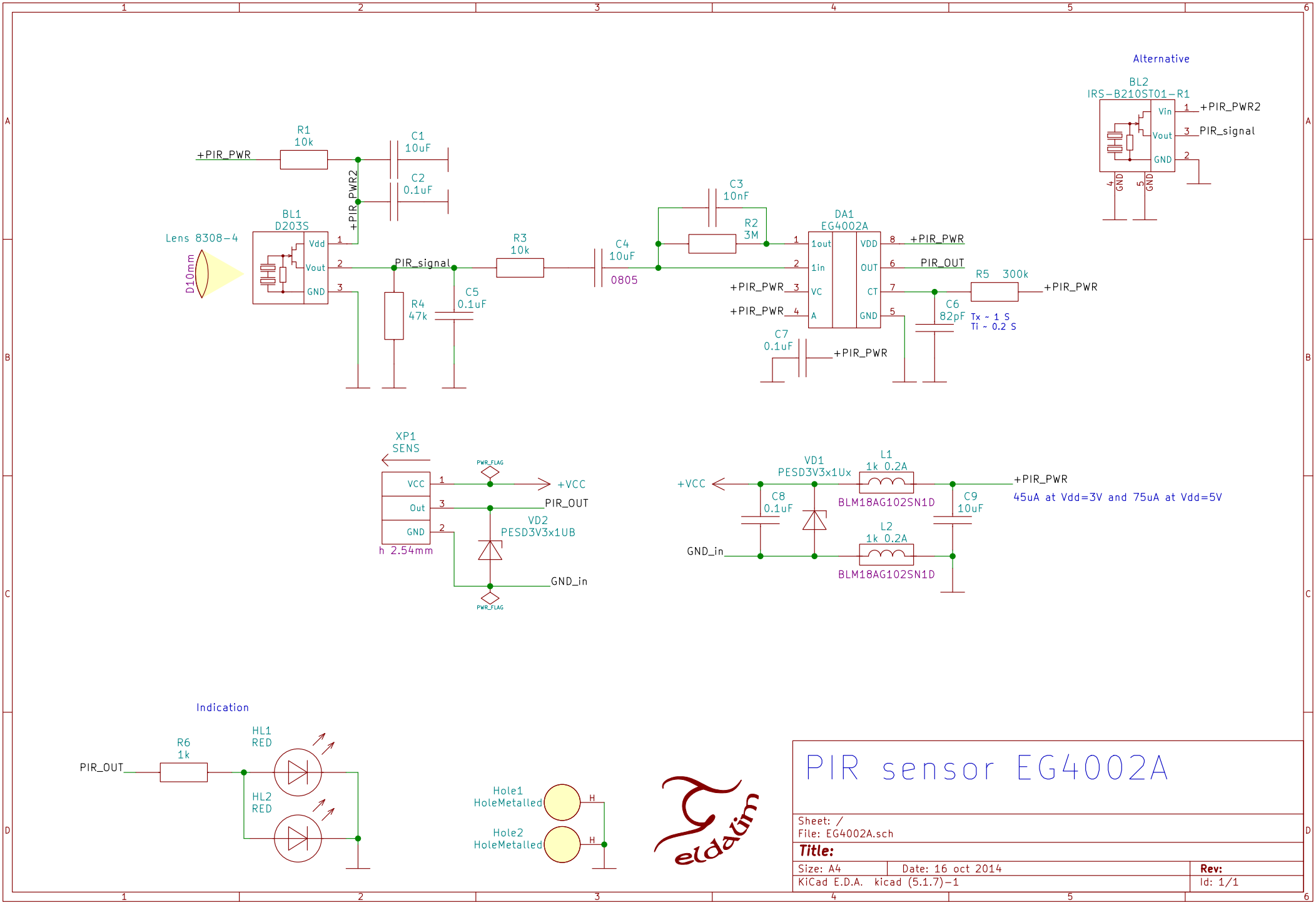

PIR sensor EG4002A

Sheet: /
File: EG4002A.sch

Title:

Size: A4	Date: 16 oct 2014	**Rev:**
KiCad E.D.A. kicad (5.1.7)-1		Id: 1/1