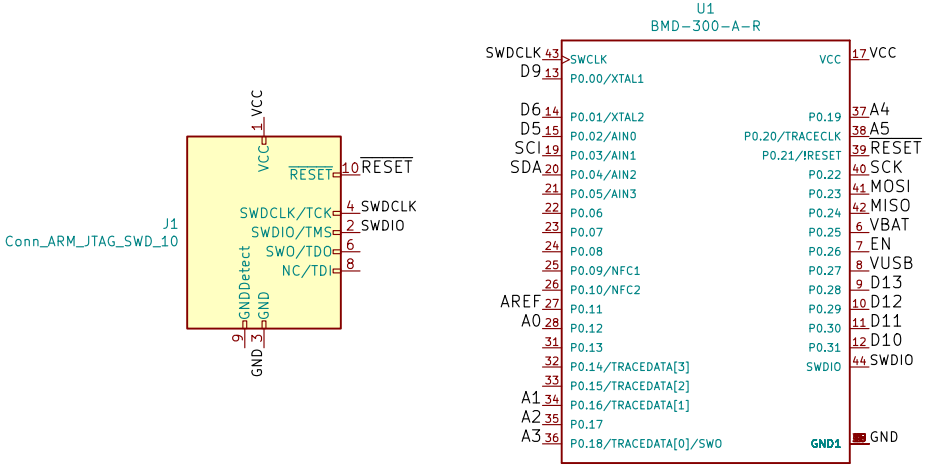

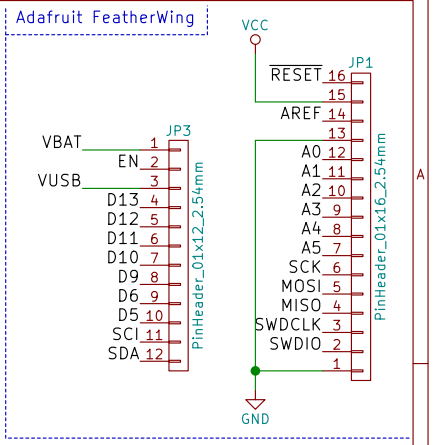

Sheet: /
File: Adafruit_FeatherWing.sch

Title:

Size: A4	Date: sam. 04 avril 2015	**Rev:**
KiCad E.D.A. kicad (5.0.1)-3		Id: 1/1