Artificial Intel Resource Ref Portfolio

ELIJAH GHAYA - 2026

AI-Driven Biometric Security

Automated Facial Recognition Drawer

- **Project Overview:** Engineered an end-to-end physical security solution using biometric authentication to control mechanical access.
- **ESP32 Cam & ESP32 Dev Board:** Utilized for on-device edge computing and image processing.
- **Computer Vision:** Implemented real-time facial detection and recognition directly on the microcontroller.
- **Prototyping:** Designed and 3D-printed custom mechanical components and housing using Fusion 360

AI Systems & Hardware Integration

From Edge Intelligence to High-Torque Actuation

- **Edge AI Inference:** Optimized a custom facial recognition model on the ESP32-S3 Sense, achieving sub-200ms real-time detection without external cloud dependency.
- **Embedded Logic:** Developed robust C++ firmware to manage memory-constrained environments, biometric handshakes, and fail-safe "manual override" protocols.
- **Security Architecture:** Implemented hardware-to-software isolation to prevent electrical noise from inductive solenoid spikes interfering with the MCU's vision pipeline.

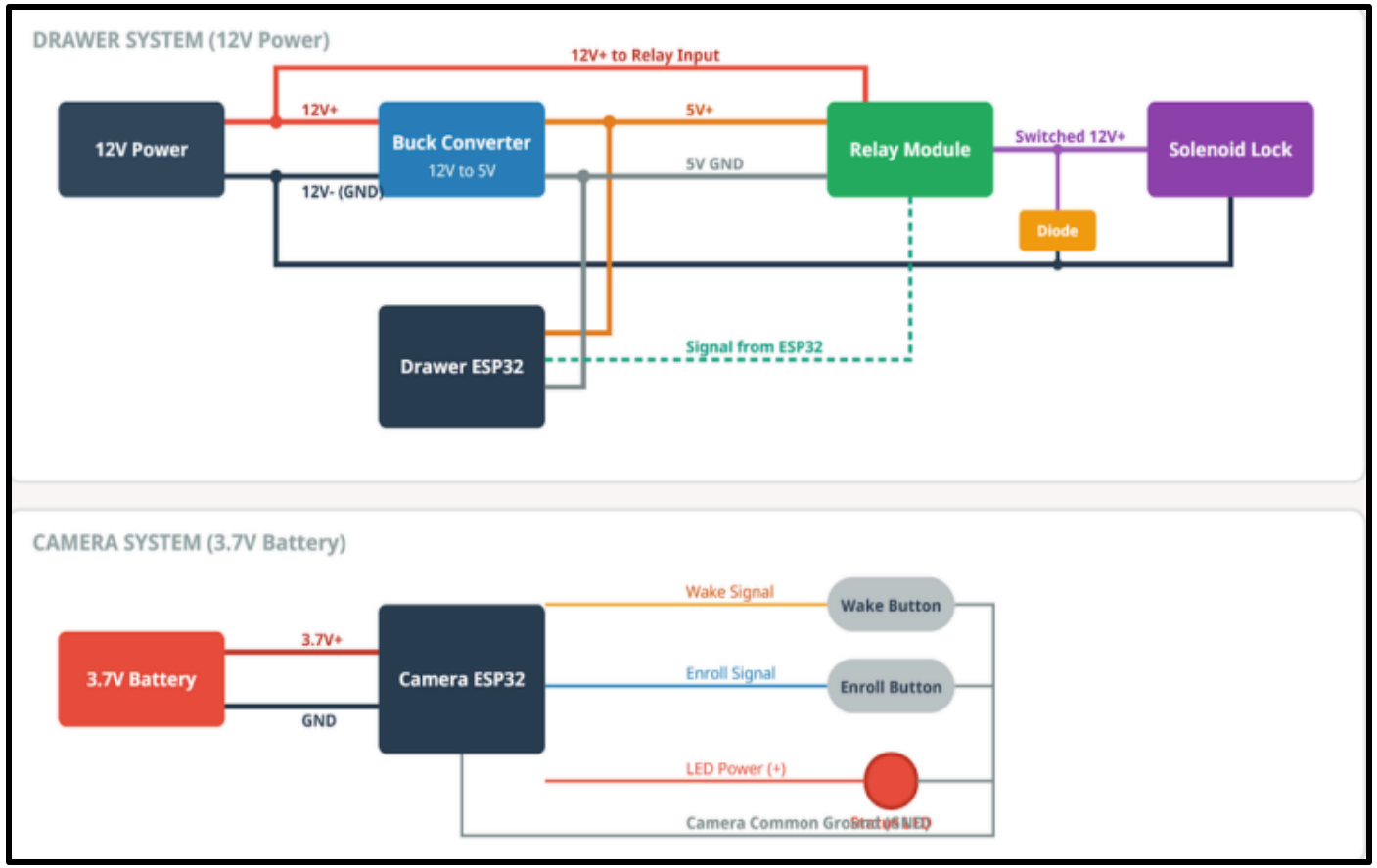

Real World Applications

Bridging Edge AI with Commercial Physical Security

Multi-Family Residential Access:

- Market Insight: During the HCC Intel Showcase, industry stakeholders from multi-home communities identified this technology as a high-value solution for secure resident access to common areas (gyms, pools, and clubhouses).

Smart Asset & Inventory Security:

- Applicable for high-value storage in Retail, Healthcare, and Labs where specific personnel need biometric clearance to access sensitive equipment or restricted inventory.

Workforce Management & Time Attendance:

- Replacing traditional punch-cards or PIN-based systems with biometric "clock-in" stations for high-volume staffing environments.

Contact Information & Github Link

https://github.com/ElijahGhaya/ITAI2277Portfolio.git

Elijahghaya@gmail.com