Proceedings of the 36th Chinese Control Conference
July 26-28, 2017, Dalian, China

A Control Approach Adaptive to Load and Road Slope for Electric Power Assisted Bicycle

Zhang Kai[1], Yin Dejun[1, 2]

1. School of Mechanical Engineering, Nanjing University of Science and Technology, 200 Xiaolingwei Street, Nanjing, China 210094

2. Corresponding author
E-mail: yin@njust.edu.cn

Abstract: Electric Power Assisted Bicycle (EPAC) is becoming the transport and fitness tools that people pursue because of its green, healthy and economical characteristics. Compared to the conventional electric bike, EPAC not only reduces the burden on the rider, but also maintains the original bicycle characteristics. Nowadays, there is few study of the control approach adaptive to road slope and load for EPAC. This paper proposes a new control approach adaptive to load and road slope for EPAC based on disturbance observers, which can estimate the road slope and bicycle body load by processing the bicycle speed signal and pedal force signal. Accordingly, the motor assisted-power ratio is adjusted in real-time to achieve the optimal assisted-power. As a result, the rider will get better riding experience. The simulation results demonstrate that the proposed control approach is highly effective in various riding conditions.

Key Words: Electric Power Assisted Bicycle; Adaptive Control; Road Slope and Load; Disturbance Observers

1. Introduction

EPAC is becoming widely popular as people pay more attention to the health, environmental protection and other aspects of the problem. EPAC not only reduces the burden on the rider, but also maintains the original bicycle characteristics. Compared with the traditional electric bicycle, EPAC can realize intelligent control. In some special situation, such as load, upslope road and so on, the rider achieves a smooth running with great effort. EPAC can detect the force state of rider dynamically by torque sensor and adjust the driving torque. This helps the rider save effort in the situation of loading or going up the slope [1-3].

The change of the road slope and the load will affect the bicycle longitudinal speed control during the bicycle riding. Considering the disturbances mentioned above, it is important to make the controller adapt to the disturbances [4]. In order to solve the problems above, researchers have proposed some control approaches adaptive to these disturbances.

So far, Stanford University HogS.Bae has proposed the application of GPS vehicle information and an atmospheric pressure sensor information to estimate the road slope [5]. However, the disadvantages of this approach are obvious. The main defect of using GPS to estimate the road slope is that the GPS frequency is low, and the delay in GPS leads to a large estimation error of road slope. At the same time, the atmospheric pressure sensor is affected by many factors, including temperature, wind speed, weather and so on. The atmospheric pressure changes with altitude very slowly, which leads to a low signal-to-noise ratio. In addition, the control approach cannot be used in the EPAC because of too many sensors.

In 2003, Professor Ardalan Vahidi proposed an approach applying the recursive least squares' algorithm to estimate the vehicle mass and road slope [6]. The approach is based on the vehicle engine output torque. However, the road slope and the vehicle quality are variables with different characteristics. The road slope is a fast variable; the vehicle mass is a slow variable which is basically constant during an experiment. Thus, it is inappropriate to simultaneously estimate the two variables which are completely different in time based on the same vehicle-level kinetic model.

In 2005, Vincent Winstead proposed an approach applying the extended Kalman Filter to estimate vehicle mass and road slope [7]. The Kalman Filter is used to estimate the vehicle mass and road slope in real time. However, the authors gave neither sufficient verification, nor a specific application.

The control approaches above are not applied to two-wheel vehicles because of a lot of sensors, high cost and complicated process.

Therefore, this paper proposes a novel control approach adaptive to load and road slope for EPAC based on disturbance observers. The control approach only needs to obtain the driving torque signal of the motor and the motor speed signal (or the bicycle speed signal). When the bicycle load and the road slope change, the controller can perceive and adjust the motor output to achieve a smooth running in real time by detecting the variation of the speed without additional human control. The advantages of this control approach are good effect and low cost.

2. Longitudinal Model

EPAC only uses a wheel motor to provide assisted-power. According to the value of the motor driving current, it is easy to obtain the motor's torque and rotation. After comparing with the output difference between the actual bicycle and the ideal nominal model, the controller calculates the compensation torque, and adjusts the power in real-time.

In this paper, the main object of study is the road slope and the load, it should try to ignore the effect of secondary factors for the driving torque. Therefore, the following assumptions are made:

*This work is supported by 'the Fundamental Research Funds for the Central Universities' No. 30917015101.

Authorized licensed use limited to: National Chung Cheng University. Downloaded on August 05,2021 at 05:53:52 UTC from IEEE Xplore. Restrictions apply.

1) the slip between the tires and the road is ignored.

2) the research focuses on the effect of load and road slope on the EPAC, the impact of wind resistance on bicycle speed is neglected.

In order to simplify this research, only longitudinal motion is discussed in this paper. The dynamic longitudinal model of the wheel based on [8,9]is described in Fig.1, and the parameter definition is listed in Table 1.

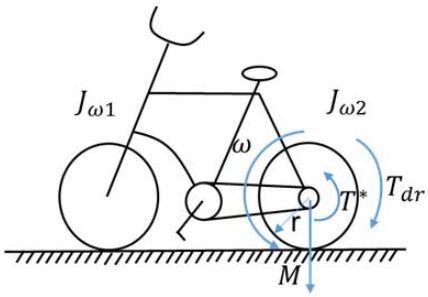

Fig.1. Dynamic longitudinal model of the wheel

Table 1. Parameter list

T^*	Driving Torque (from rider and /or motor)
T_{dr}	Resistance Torque
M	Total Mass
r	Wheel Radius
J_{w1}	Front Wheel Inertia
J_{w2}	Rear Wheel Inertia
w	Wheel Speed

Acording to Fig.1, the dynamic equation for the longitudinal motion of the bicycle are described as formula (1):

$$T^* - T_{dr} = (Mr^2 + J_{w1} + J_{w2})\frac{dw}{dt} \tag{1}$$

Ignoring the driving resistance of the road, $T_{dr} = 0$, the ideal dynamic equations of longitudinal motion of the bicycle are described as follows:

$$T^* = J\frac{dw}{dt} \tag{2}$$

$$J = Mr^2 + J_{w1} + J_{w2} \tag{3}$$

Here, T^* is easily measured, J_{w1}, J_{w2}, r are fixed and known. Mr^2 is equivalent moment of inertia, J is the total of inertia. If the mass of the bicycle does not change, the driving torque will correspond to the bicycle motion state one by one on the flat road. The value of T_{dr} increases when the road slope increases. Simultaneously, Mr^2 increases when the bicycle load increases. These two variables will lead to changes in bicycle motion state. In this paper, the novel control approach adaptive to load and road slope is proposed based on these characteristics.

3. Controller Design

In this section，a novel control approach adaptive to load and road slope is proposed based on disturbance observer, the Fig.2 shows the basic idea of disturbance observer. The interference from the external torque and the changes of the actual model parameters will be equivalent to the control input, which is named equivalent interference. In this control, the controller adds the equal amount of compensation torque, to achieve complete suppression of interference. $P(s)$ is the transfer function of the plant, and d is observation interference, $\hat{d}$ is equivalent interference.

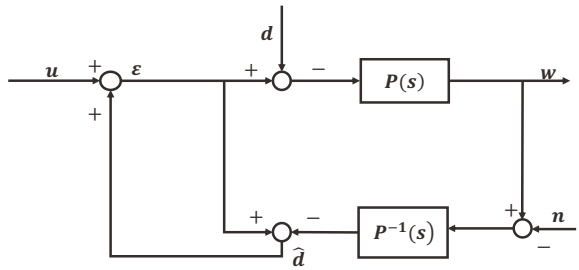

Fig2. The basic idea of disturbance observer

From Fig.2, the d can be described as follows:

$$d = (\varepsilon + d)P(s)P^{-}(s) - \varepsilon = d \tag{4}$$

The observation interference d can be perfectly compensated based on formula (4). However, the problems for the actual physical system are listed below:

1) Usually, the inverse of the $P(s)$ cannot be obtained accurately.

2) The exact mathematical model of the plant is not available.

3) Due to the influence of noise, the performance of the controller is degraded.

Accordingly, a modified control approach is described as Fig.3. T^* is the driving torque provided by the rider and the motor. $P(s) = w(s)/T^*$ is the real controlled plant. T_{dis} is the disturbance torque, n is the sensor noise, and w is the wheel speed ,$Q(s)$ is a low pass filter (LPF).

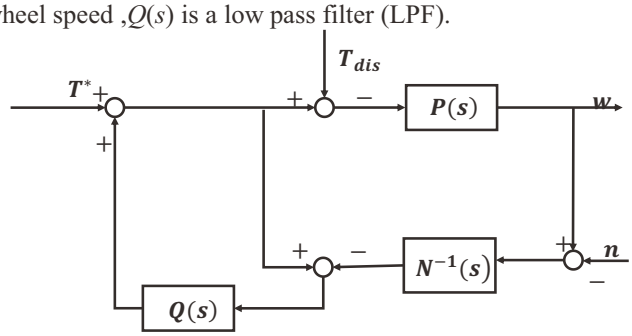

Fig.3. Block diagram of control

As introduced above, we can build a model, in which the bicycle motion variation caused by road slope and load is regarded as inertia variation. In this paper, the variation is described as the plant uncertainty Δ. Thus, the plant transfer function can be represented as follows:

$$P(s) = \frac{1}{J_n s}(1 + \Delta) \tag{5}$$

$$J_n = \overline{M}r^2 + J_{\omega 1} + J_{\omega 2} \tag{6}$$

$$\Delta = \frac{J_n - J}{J} \tag{7}$$

Therefore, the control can be described as Fig.4.Where $\overline{M}$ is the mass of ideal nominal model which includes the mass of the rider and the bicycle, J_n is the ideal nominal

Authorized licensed use limited to: National Chung Cheng University. Downloaded on August 05,2021 at 05:53:52 UTC from IEEE Xplore. Restrictions apply.

inertia, J is the real inertia which varies with the load and road slope. J takes its nominal value J_n when the bicycle is running on a flat road and M is equal to the mass of ideal nominal model.

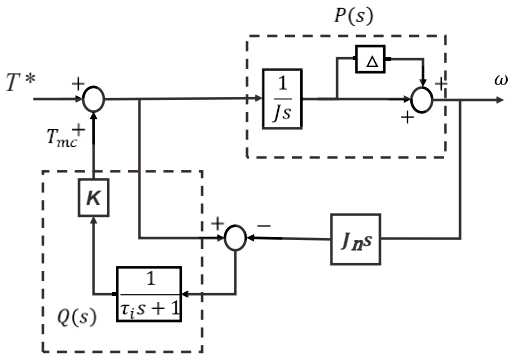

Fig.4. Control system proposed

The plant can be nominalized by disturbance observer [10]. In this paper, the disturbance observer is applied to adaptive control. When perfect nominalization is achieved with ideal observer gain K = 1, the torque response becomes complete ideal nominal state regardless of Δ as:

$$w(s) = \frac{1}{J_n s} T^*(s) \tag{8}$$

Stability analysis:

If the controlled plant can be described by the simple model as (2), the observer gain can be set to the ideal value K = 1 and complete ideal nominal condition is achieved as (3). However, the real plant has latency:

1) wheel speed detection with low resolution encoder,
2) control band- width of torque current loop
3) the time delay between the motor torque and traction force generation through tire dynamics [11].

Thus, the stability of the proposed system is analyzed by taking the dead-time into account.

The controlled plant with dead-time can be described as:

$$P(s) = \frac{1}{Js} e^{-sT_d} \tag{9}$$

where T_d is the equivalent dead-time and the uncertainty Δ can be defined as

$$\Delta(s) = \frac{J_n}{Js} e^{-sT_d} - 1 \tag{10}$$

In this paper, the controller has to ensure the closed-loop stability against this unmodeled dynamics $\Delta(s)$. By utilizing the Mason formula, we can obtain the transfer function of Fig3. The stability of the closed-loop system can be analyzed by the open-loop transfer function.

$$H_{T^*\omega}(s) = \frac{P(s)N(s)}{N(s) + [P(s) - N(s)]Q(s)} = \frac{P(s)}{1 - \Delta(s)Q(s)} \tag{11}$$

The necessary and sufficient conditions disturbance observer closed-loop stability can be described as follows:

$$|Q(s)\Delta(s)| \le 1 \tag{12}$$

$$Q(s)\Delta(s) = \frac{K}{\tau_i + 1}\left(\frac{J_n}{J} e^{-sT_d} - 1\right) \tag{13}$$

Where, $Q(s)$ is the complementary sensitivity function composed of low pass filter (LPF) and observer gain K. In this paper, this gain K is determined based on (13) to assure the closed-loop stability.

4. Simulations and Discussion

The system shown in Fig.4 is simulated by BikeSim and MATLAB-Simulink. The ideal nominal bicycle parameters as Table 2:

Table 2. Main Parameters of the Ideal Nominal Model

Bicycle Mass	20kg
Rider Mass	60kg
Wheel Radius	0.29m
Front Wheel inertia	0.1 kgm^2
Front Wheel inertia	0.1kgm^2
Ideal Nominal Inertia	7 kgm^2
The Initial Speed	0 km/h

The nominal model bicycle runs on a flat road surface with rear-wheel independent drive. These bicycle parameters and road conditions are set in BikeSim, and the driving torque is simulated gradually decreased until stable.

4.1 Influence of *K* in Controller

Fig. 5 shows the simulation results with variations in the rider mass. In this simulation, the rider mass is 120kg. The bicycle is traveling on a flat road surface, and the disturbance observer gain K is set to 0.5 and 0.9, respectively.

Fig.6 shows the simulation results with variations in the road slope. In this simulation, the rider mass is 60 kg, the road slope is 15%, the bicycle enters the slope road after 50m on a flat road, the disturbance observer gain K is set to 0.5 and 0.9, respectively.

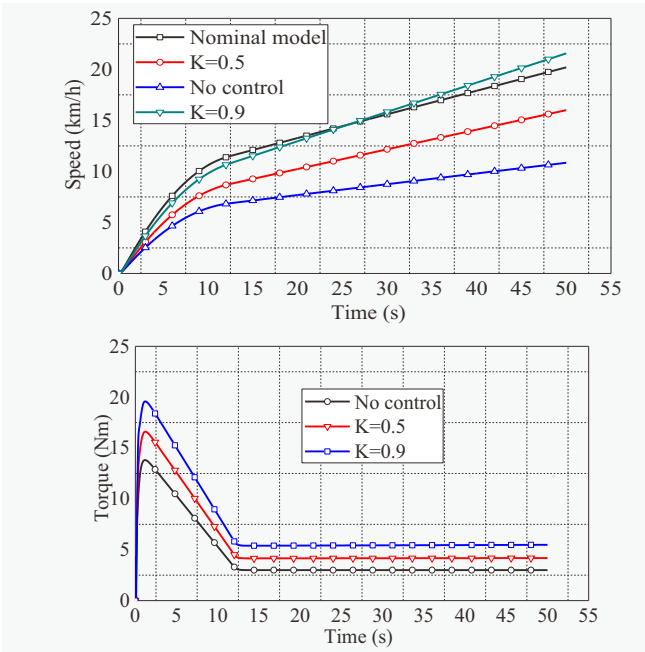

Fig.5: Comparison of simulation results with variations of the disturbance observer gain K in 120kg load and on flat road.

Authorized licensed use limited to: National Chung Cheng University. Downloaded on August 05,2021 at 05:53:52 UTC from IEEE Xplore. Restrictions apply.

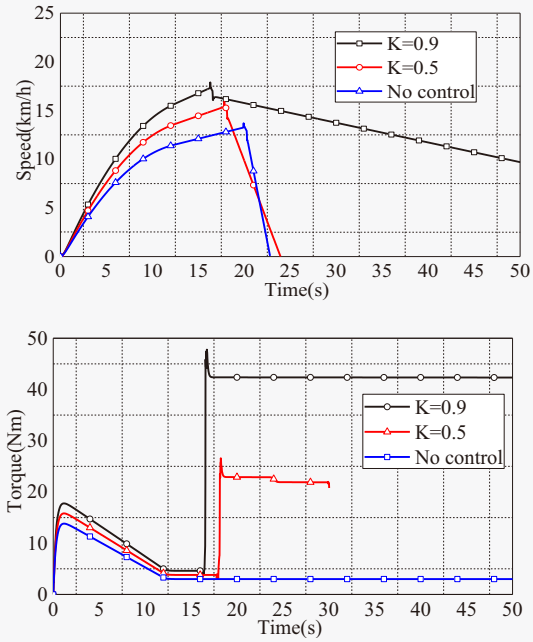

Fig.6: Comparison of simulation results with variations on the disturbance observer gain *K* in 60kg load and on the 15% slope road.

In Fig.5, it shows the variation of the bicycle speed and the driving torque without control and with different values of gain K, respectively. In this simulation, the initial driving torque will be set to a variable that is ultimately stable from 12Nm to 2 Nm. With the no-control case, the bicycle speed is slow. With the control case, the bicycle speed becomes faster, and the driving torque is larger than the initial driving torque.

In Fig.6, it shows the variation of bicycle speed and the driving torque with different values of gain *K*, respectively. In this simulation, the initial driving torque will be set to a variable that is ultimately stable from12Nm to 2 Nm. With the no-control case, after the bicycle enters the slope road, the initial driving torque is insufficient to drive the wheel continues to move, the bicycle speed drops rapidly to zero. With the control case, when the bicycle enters the slope road, the control system immediately controls the motor to a larger driving torque value, which maintains the bicycle moving forward.

By analyzing the above two simulation results, in case of K= 0.9, the bicycle movement follows the nominal model movement, the controller achieves high control performance. Therefore, the gain of the controller should be 0.9(K= 0.9).

4.2 Comparison of the Results with Variations in Load

Fig. 7 shows the simulation results with variation in the rider mass under control. In this simulation, the road slope is 5%, the rider mass is set to 30 kg, 60 kg ,90 kg and 120kg, respectively.

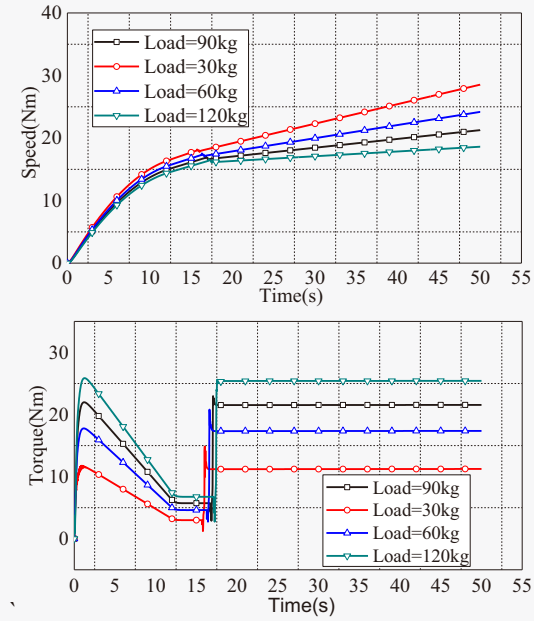

Fig.7: Comparison of simulation results with variations of the load on the 5% slope road

In this simulation, the initial driving torque is set to a variable that is ultimately stable from 15Nm to 3Nm. With the control case (K=0.9), when bicycle enters downslope road, the bicycle speed does not increase excessively but slowly, and the driving torque instantly becomes a negative value and becomes resistance torque. On the contrary, when bicycle enters upslope road, the bicycle speed decrease slowly, the driving torque instantly become a larger value. The Fig.7 also shows that the slope becomes greater, the driving/ resistance torque becomes larger.

4.3 Comparison of the Results with Variations in Slope

Fig. 8 shows the simulation results with variation in the road slope under control. In this simulation, the rider mass is 90 kg, the road slope is set to -10%, -5%, 5% and 15%, respectively.

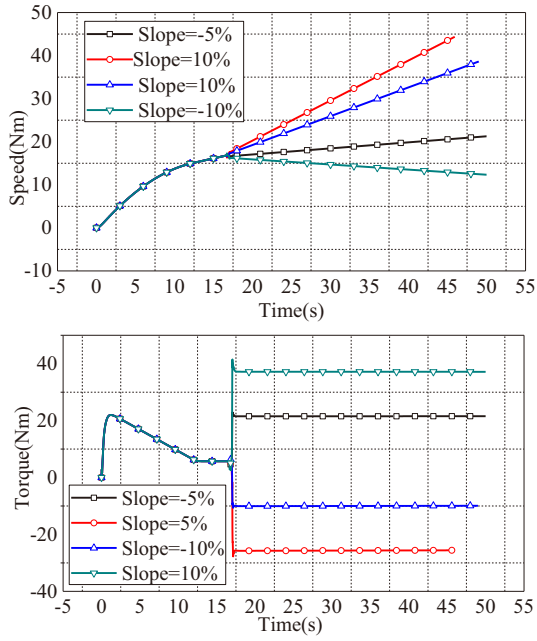

Fig.8: Comparison of simulation results with variations of the road slope in the 90kg load

Authorized licensed use limited to: National Chung Cheng University. Downloaded on August 05,2021 at 05:53:52 UTC from IEEE Xplore. Restrictions apply.

In this simulation, the initial driving torque is set to a variable that is ultimately stable from 15Nm to 3 Nm. With the control case (K=0.9), there is no significant bicycle speed difference in four load cases. However, when bicycle enters slope road, the driving torque is significantly different in four load cases. The Fig.8 also shows that the load becomes greater, the driving torque becomes larger.

4.4 Stability Analysis: Control Performance in Extreme Cases

Fig. 9 shows the simulation results with variations in the rider quality and the road slope under control. In this simulation, both variables are set to extreme cases: the rider weight is 120 kg, the road slope is set to 15% and -15%, respectively.

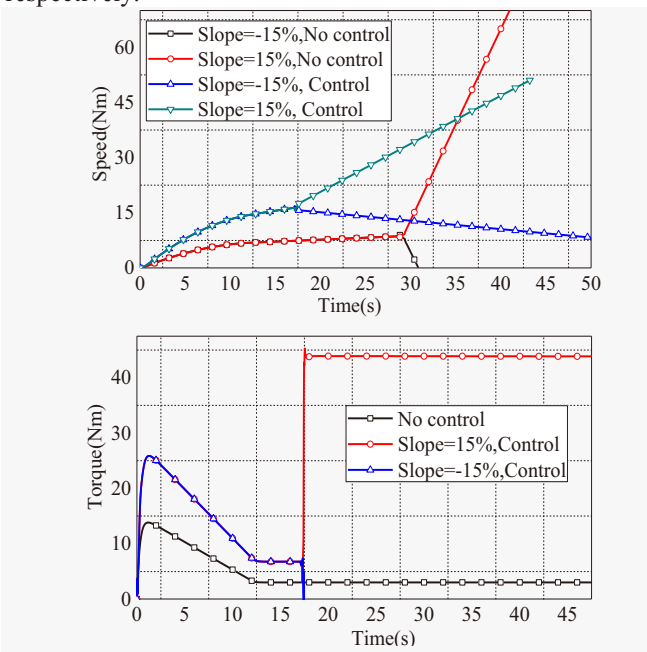

Fig.9: Comparison of simulation results with and without control in extreme cases

In this simulation, it shows the simulation results without control and with the control (K=0.9) system this paper proposed respectively. Whether the bicycle enters upslope road or downslope road, the bicycle speed changes rapidly. From the driving torque Fig, we can clearly realize that the driving torque suddenly change to a certain value to adapt to the slope changes. This simulation results shows that the controller still achieves high control performance in very extreme cases. The control system is stable.

5. Conclusion

This paper proposesa new and high-performance control approach adaptive to load and road slope for EPAC based on disturbance observers. By only processing signals of the motor's torque and speed, the adaptive control can be implemented at low cost. This paper presented a series of comparative simulation results to prove the controller's performance in some extreme cases. The simulation results and analysis demonstrated that the proposed controller has significant effectiveness and high control performance.

For further work, the controller will be applied to the bicycle to verify its validity and robustness. And the impact of wind resistance on the controller will be considered. Furthermore, it is possible to extend this controller to other electric vehicles.

References

[1] Kou Zhiguo. Design of Electric Controller Based on TMS320F28035 [D]. Hangzhou Danzi University,2011

[2] He Qingling.Study on Sensor-less Motor Bike [D]. HeFei University of Technology,2002

[3] Xia Jingman. Research and Implementation of Torque Sensing Control System Based on Holzer Device [D]. Southwest University,2015

[4] Liu Bainan. Research on Longitudinal Speed Control for Autonomous Vehicles Adaptive with Road Grade and Vehicle Mass [D]. Jilin University,2015

[5] Hong S.Bae, Jihan RYU, J.Christian Gercfes. Road and Vehicle Parameter Estimation for Longitudinal Control Using GPS[C]. 2001 IEEE Intelligent Transportation Systems Conference.

[6] Ardalan Vahidi, Anna Stafanopoulou, Hui Peng. Recursive Least Squares with Forgetting for Online Estimation of Vehicle Mass and Road Grade-Theory and Experiments [J] Vehicle System Dynamics, 2005, 43(1):31-55.

[7] Vincent Winstead and Ilya V.Kolmanovsky. Estimation of Road Grade and Vehicle Mass via Model Predictive Control[C]. The 2005 IEEE Conference on Control Applications.Toronto, 2005.

[8] Hori Y. Motion Stabilization Control of Electric Vehicle under Snowy Conditions Based on Yaw-Moment Observer [J]. Industrial Electronics IEEE Transactions on, 2004:35-40.

[9] Yin, D., S. Oh, and Y. Hori. "A Novel Traction Control for EV Based on Maximum Transmissible Torque Estimation." IEEE Transactions on Industrial Electronics 56.6(2009):2086-2094.

[10] K. Ohnishi, M. Shibaia and T. Murakami: "Motion control for advanced mechatronics". IEE UASMETrans. Mechatmnics, 1, I. pp. 5 M 7 (1996).

[11] T. Umena, K. Asano. H. Ohashi. M. Yonetani, T. Naitou and T. Taalwchi:" Observer hased estimation of aarameier variations and its application to tire pressure diagnosis", Control Engineering Practice, 9, 6, pp. 639645 (2001).

Authorized licensed use limited to: National Chung Cheng University. Downloaded on August 05,2021 at 05:53:52 UTC from IEEE Xplore. Restrictions apply.