Design and Simulation of an Intelligent Bicycle Transmission System

Puneet Tandon, Arpit Awasthi, Bipin Kr. Mishra, Pragam Rathore, and Ram Krishan Shukla

***Abstract*—An intelligent bicycle transmission system provides a solution that enables a bicycle rider to keep pedaling in his comfort speed range regardless of the torque or the speed requirement. The cadence or the pedaling speed has a preferred range for every rider. However, a rider can exceed or fall below his preferred range when in need of a torque or a velocity more than what the cycle offers to him. The designed transmission system presented in the paper senses the requisites of the rider, and hence, changes gears automatically so that cyclist can keep pedaling in his preferred cadence range. This paper proposes an extremely cost effective and novel solution that improves upon the existing designs of automatic gear shifting arrangement in bicycles. It incorporates special built-in sensors, electronic control unit and specially designed state-of-the-art actuator mechanism that augment the derailleur mechanism. It keeps the cost of the transmission system within an acceptable range with an uncompromised accuracy. In designing the solution, the preferred cadence range of a given user shall be employed.**

***Index Terms*—Cadence, derailleur, electronic control unit (ECU), gear shifting, intelligent transmission.**

I. Introduction

IN THE present scenario of a crude oil crisis, the use of bicycles is good for commuting. Further, it provides good exercise to the user and is environmentally friendly as well. Unfortunately, there exists a problem of timely and appropriate maneuvering of gear changing levers in a multigear bicycle to reach the desired balance between torque and speed, which has not been properly answered so far. The gear manipulation in the case of a bicycle is not a simple linear progression from a lower gear to a higher gear as in a motorized vehicle, for example, a car. It is instead a function of the ratio of the front gear size to the rear gear size, both of which are variable.

Another problem with the shifting of gears on bicycles is that the derailleur, which is the mechanism that moves the chain between gears of different sizes, is imprecise in nature. Although some designs are better than others, overshooting or undershooting from the desired gear is common, and if the rider is pedaling the bicycle too fast or under too heavy a load, the chain can easily slip off the gears entirely, requiring a greasy manual adjustment. Hence, the need for automatic gear change is of great significance. The major requirement of an automatic gear transmission is a mechanism designed to ensure that the movement of the chain between the gears is automatic, instead of the manual mechanism of the standard lever-operated cable. In addition, there is a need to properly look into the timing of shifting of the gear, which is another critical issue.

Bicycle transmission has continuously evolved for over a century and although it is deceptively simple, it is extremely difficult to implement. Browning Research [1] was probably the first company to successfully solve the formidable problems associated with fully automatic gear shifting. However, the enhancement of the cost factor was a great drawback, since the cost of the microcontroller/mini computer circuitry used was much more than the cost of the bicycle itself [1]. Hence, the need evolved for a simpler, highly efficient, and cost-effective solution.

Some of the similar designs/mechanisms developed by other researchers (as reported in the literature) were studied to help arrive at the proposed design. Behbahani and de Silva [2] have presented a concurrent, integrated, and multicriteria methodology for conceptual design of a mechanism and a mechanical design quotient to evaluate the proposed design of the machine. Zhang *et al.* [3] propose a mechatronic design methodology for the integrated design of mechanical structure and control algorithm for a programmable four-bar linkage. Li *et al.* [4] described a "design for control" technique for a mechatronic system design, and implemented it for a programmable four-bar linkage. Ouyang *et al.* [5] proposed a sliding-mode controller for a hybrid machine and its simulation to show the effectiveness of the system. Silva *et al.* [6] captured the varying dynamics and the embedded control system actions and applied it to a pick-and-place assembly robot considering structural and control parameters.

In this paper, a novel and cost-effective methodology is proposed. It implements an automated bicycle transmission system that can enable a bicycle rider to keep pedaling within his preferred cadence range regardless of the torque or speed requirement. The proposed design provides fairly accurate transmission and is not a compromise on accuracy. Due to the very low cost, effectiveness, and efficiency of the transmission, the masses can avail it conveniently.

The paper is organized as follows. The concepts of cadence and gearing, as in a bicycle, are presented in Section II. The idea and the approach for the design of the transmission system are

Manuscript received May 4, 2009; revised October 31, 2009 and February 9, 2010; accepted February 22, 2010. Date of publication April 5, 2010; date of current version May 6, 2011. Recommended by Technical Editor P. X. Liu.

P. Tandon and R. K. Shukla are with the Pandit Dwarka Prasad Mishra Indian Institute of Information Technology, Design and Manufacturing, Jabalpur 482005, India (e-mail: ptandon@iiitdm.in; ram@iiitdm.in).

A. Awasthi is with Hella KGaA Hueck and Company, Pune 411045, India (e-mail: arpit@iiitdm.in).

B. K. Mishra and P. Rathore are with the Indian Institute of Technology Kanpur, Kanpur 208016, India (e-mail: bipin@iiitdm.in; pragam@iiitdm.in).

Color versions of one or more of the figures in this paper are available online at http://ieeexplore.ieee.org.

Digital Object Identifier 10.1109/TMECH.2010.2045431

1083-4435/$26.00 © 2010 IEEE

Authorized licensed use limited to: National Chung Cheng University. Downloaded on August 05,2021 at 05:53:20 UTC from IEEE Xplore. Restrictions apply.

presented in Section III. The designs of the core components of the proposed automated transmission system are provided in Section IV. Observations and simulation results are given in Section V. This is followed by Section VI that provides the concluding remarks.

II. Cadence and Gearing

Bicycle's motion is dependent on the input power being delivered by the rider in the form of pedaling. Pedaling involves rotation of a front sprocket due to pressure applied by the rider's feet. This motion is then transmitted to the rear wheels through a chain mechanism and rear sprocket (a smaller gear attached to the rear wheels). The primary concern for a driver is the rate of energy that is to be supplied to the bicycle in order to move it with required speed/torque. This rate is limited by the rider's physical ability. Cycling involves different riding conditions, each having their own power requirements. For instance, while racing more speed is desirable, whereas for city commuting, comfort is preferred over speed. Cadence, as used in the paper, can be defined as the angular velocity with which the pedal rotates around the bottom bracket of the bicycle. Every cyclist has his own ''preferred cadence'' range. Also, a cyclist while cycling is offered a fixed resistance from pedals [7].

From the basic laws of physics, it is known that

$$\text{Power } P = \tau \times \omega \tag{1}$$

where is τ torque and ω is angular velocity.

In the case of a bicycle, power is limited by the physical constraints of the rider. In order to ride at an optimum comfort level, rider faces a tradeoff between torque or force applied and angular velocity of the pedal. In order to efficiently use the preferred cadence range, gears are used. Gearing, in the context of bicycles, is to select the correct pair of front sprocket (driving gear) and rear sprocket (driven gear). By switching between driven gears, rider is provided with the torque or the speed of his/her choice without altering the pedaling power/pedaling speed. The necessity of gearing can be explained by comparing it with walking. In walking up a hill, our pace becomes shorter and our forward movement slower, while in walking down a hill, our pace becomes longer and our movement quicker. If we try walking up a steep hill without slowing down, we will rapidly become exhausted. However, on a geared bicycle, there is no need to slow down the speed of our legs as we can gear down (shift the chain to large rear sprocket) to reduce the amount of pressure we have to apply to the pedals. Therefore, a cyclist going up a hill and down a hill may be cycling his legs at the same pace and making the same effort, but the bike while going uphill travels a shorter distance and while going down travels a longer distance with every turn of the crank. The cyclist on the uphill gives up speed to save effort, the same as the person walking up a hill [8], [9].

For the same power output at the rear wheel, a lower gear (the one with the larger mechanical advantage or the larger rear sprocket) will require the rider to pedal at a faster cadence, but with less torque. Conversely, a higher gear (the one with the smaller mechanical advantage or the smaller rear sprocket) allows a higher speed for a given cadence, but requires greater torque, as illustrated in Table I.

TABLE I
Cadence and Force Requirements

Gear type	Gear Ratio	Mechanical Advantage	Cadence	Input force
Low (Large Rear Sprocket)	Low	High	Faster	Less
High (Small Rear Sprocket)	High	Low	Slower	More

If we had a perfect bicycle, with an infinite number of gears, a bicyclist may not have to apply variable energy to achieve the constant cadence. We would always be pedaling at the same cadence, with the same amount of resistance. Of course, the bike would go slower uphill and faster downhill. There is always a correct correlation between the gear at which the bicycle and the cadence is running. Pedaling faster than the preferred cadence can allow rider to generate an extra burst of speed that will soon tire the rider out. However, pedaling slower than the preferred range of cadence will not lead to the efficient utilization of energy generated by pedaling, due to higher torque requirements at lower revolution per minute [7].

One of the functions of a multispeed transmission system of the bicycles can be considered to provide the cyclist with the choices between high-cycling cadence along with low-cycling torque and low-cycling cadence with high-cycling torque under one's fixed comfortable output power [7]. In the prior studies, the cycling cadence has been generally considered as an index of cyclist's comfort and cycling efficiency. These conclusions are determined by experiments conducted by various researchers and are reported in the literature. The experiments concluded that a cyclist cycling with a cadence of 50–65 r/min consumes the least oxygen [9]. The pedaling rate, corresponding to the least oxygen consumption at a workload of 50–300 W, is in the range of 42–60 r/min [10], [11]. Another set of experiments showed that most professional cyclists pedal at a cadence between 85 and 95 r/min [12]. Determination of the preferred cadence range for cycling is still a debatable topic. However, riding at low (<60–70 r/min) and high (>90 r/min) has its own advantages and disadvantages. Low cadence results in lower heart rate (HR), pulmonary ventilation, i.e., the amount of air inspired or expired (in L/min) and oxygen intake rate [13]. From the aforementioned results, it can be concluded that a pedaling rate of 85–100 r/min is most efficient for competitive cycling, whereas 50–60 r/min range is more preferred for city commutation, where least oxygen consumption is desirable. Besides at low speeds—as those typical in commutation cycling—cadence lowers toward the range of 50–60 r/min, may be due to reduced crank inertial load. In the proposed design, an effort is made to provide an intelligent transmission system to encounter a fix cadence range of 50–60 r/min that is suitable for nonprofessional riders for the purpose of city commuting.

Authorized licensed use limited to: National Chung Cheng University. Downloaded on August 05,2021 at 05:53:20 UTC from IEEE Xplore. Restrictions apply.

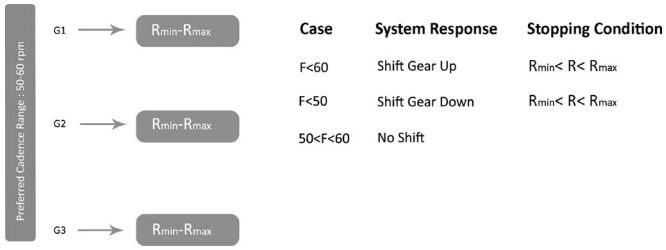

Fig. 1. Working principle of transmission system.

III. Design of Transmission System

Based upon the theory of preferred cadence as mentioned in the previous section, an approach for the design of transmission system is suggested with the following parameters.

Preferred cadence range: $50 \leq F \leq 60$, where

$$F_{\min} = 50\,\mathrm{r/min};$$

$$F_{\max} = 60\,\mathrm{r/min}.$$

Gear ratio:

G_i = Number of teeth in the front sprocket/number of teeth in the ith rear gear.

The range of angular velocity (R) of the wheel varies for each gear ratio from $F_{\min} \times G_i$ to$F_{\max} \times G_i$. For each gear ratio

$$R_{\min} = F_{\min} \times G_i \tag{2}$$

$$R_{\max} = F_{\max} \times G_i. \tag{3}$$

A sensor (A) is used to measure the cadence. The sensor output corresponding to preferred cadence is noted. Another sensor (B) is used to measure the angular velocity range of the rear wheel corresponding to different gear ratios. While pedaling, if cadence crosses the F's upper limit ($F_{\max}$), actuator is activated to shift a gear up from the current level to decrease the cadence, the process being called upshifting. Similarly, if cadence falls below the F's lower limit ($F_{\min}$), actuator is activated to shift a gear down from current level to increase the cadence, the process being called downshifting [14]. As soon as gear is changed, new range of R is obtained corresponding to a new G. For the actuator to stop at certain gear, a check is performed, which compares the sensor on the rear wheel output with the new range R. If this output lies in the range R, the actuator is turned OFF. Fig. 1 illustrates the same working principle. The algorithm for gear shifting is developed currently for three gears, but can be easily extended for any number of gears.

IV. Design and Implementation

The implementation of the algorithm required fulfilling of three steps: 1) design of two sensor devices A and B that measure the angular velocities accurately and their output is in the form of parameters, which can be inputted to an electronic control unit (ECU); 2) design of an ECU that receives the output of the sensors and controls the motion of the actuator that causes the shifting of the gear; and 3) design of an actuator that shifts the gear system as per the signals generated by the ECU. The design process is shown with the help of a flowchart in Fig. 2.

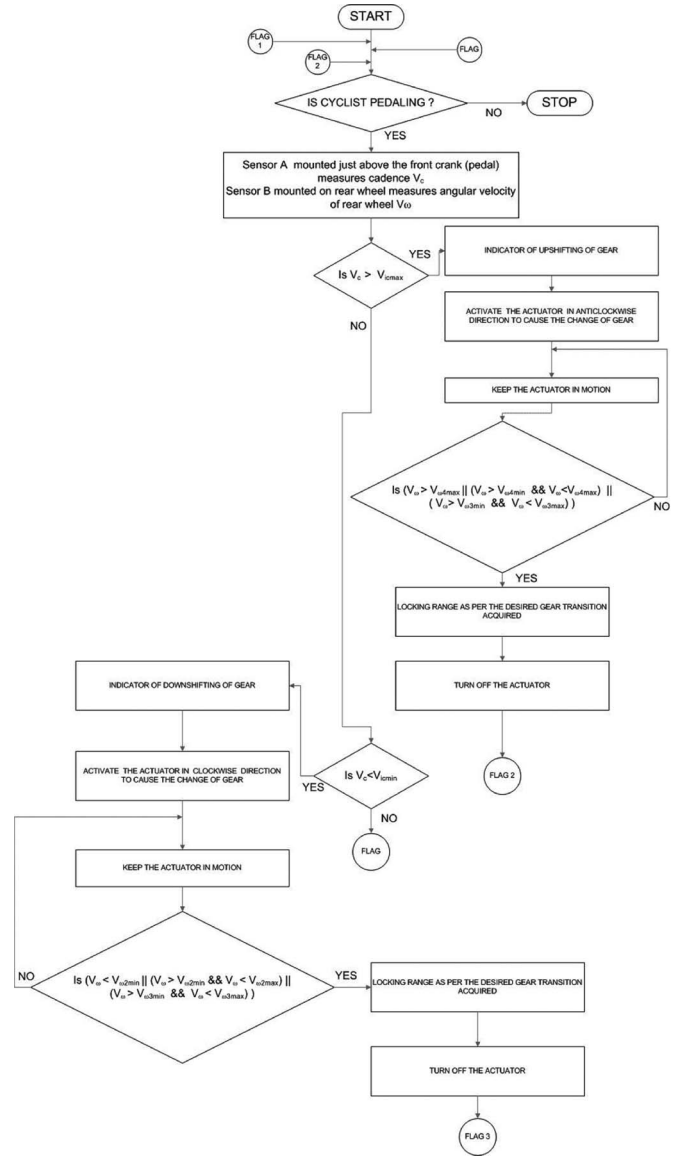

Fig. 2. Flowchart of the design process.

A. Sensor Devices

In the presented design, two sensors have been used. Sensor A has been used to measure cadence and sensor B to measure angular velocity of the rear wheel. Many velocity-sensing devices are available in the market, but their cost was defying the economic concern of this paper. Hence, the need was to devise a cost-effective method to sense the angular velocity and cadence. Therefore, a very simple and pecuniary solution was implemented based on the voltage generating principles of a dc motor.

The generator action of a dc motor is the result of the Faraday's induction principle. A dc motor generating voltage is a passive analog sensor that provides voltage proportional to the velocity of the rotating shaft. There is no need of external reference or excitation voltage. The dynamic relationship between the terminal voltage V_i, and current i in the rotor winding, and

Authorized licensed use limited to: National Chung Cheng University. Downloaded on August 05,2021 at 05:53:20 UTC from IEEE Xplore. Restrictions apply.

Fig. 3. Setup arrangement of sensors A and B.

the angular speed of the rotor ω (in rad/s) is as follows:

$$V_i(t) = L\frac{di(t)}{dt} + Ri(t) + K_{v\omega}\omega \tag{4}$$

where L is the inductance, R is the resistance, and $K_{v\omega}$ is back electromotive force (EMF), a constant property of motor.

The voltage generated due to the back EMF is as follows:

$$V_{\mathrm{bEMF}} = K_{v\omega}\omega. \tag{5}$$

By design, the parameters L and R are selected such that they result in a small motor current (i). In steady state, the output voltage is proportional to the shaft velocity

$$V_{\mathrm{out}}(t) = K_{v\omega}\omega \tag{6}$$

where

$$K_{v\omega} = K_{v\omega}(T, \theta) \tag{7}$$

where T is temperature and θ is rotor position [15].

Two 12 V, 2400 r/min brushed dc motors were attached to the system to measure cadence and angular velocities individually. For cadence measurement, motor is mounted just above the front crank. As the cycle pedal is rotated, a small belt transmits the motion to motor's shaft, which in turn, produces a voltage proportional to the shaft's speed of rotation as per the principle discussed earlier. A similar arrangement is made at the rear wheel to measure the angular velocity of the rear wheel of the bicycle. Once activated, the actuator remains in motion until the sensor B responds with a signal corresponding to "locked state." A state is said to be locked when the signal is given corresponding to the acquisition of the desired gear position that further corresponds to preferred cadence range. A voltage amplifier circuit is used to amplify the generated voltage (which is usually less than 1 V) to bring it within a detectable range for ECU. The setup arrangement for the two sensors is shown with the help of Fig. 3.

From the experimental results, it is found that a voltage range of [1.3, 1.7] V is obtained by the sensor A for the preferred cadence. The values generated by the sensor corresponding to the driven wheel are shown in Table II.

B. Electronic Control Unit

We designed an ECU with two main sections: 1) actuator control circuit and 2) motor driver circuit. A voltage amplifier

TABLE II
VOLTAGE RANGES FOR THE DRIVEN WHEEL

Gear Number	Lower Value (V)	Upper Value (V)
2	1.80	2.30
3	2.50	3.10
4	3.18	3.60

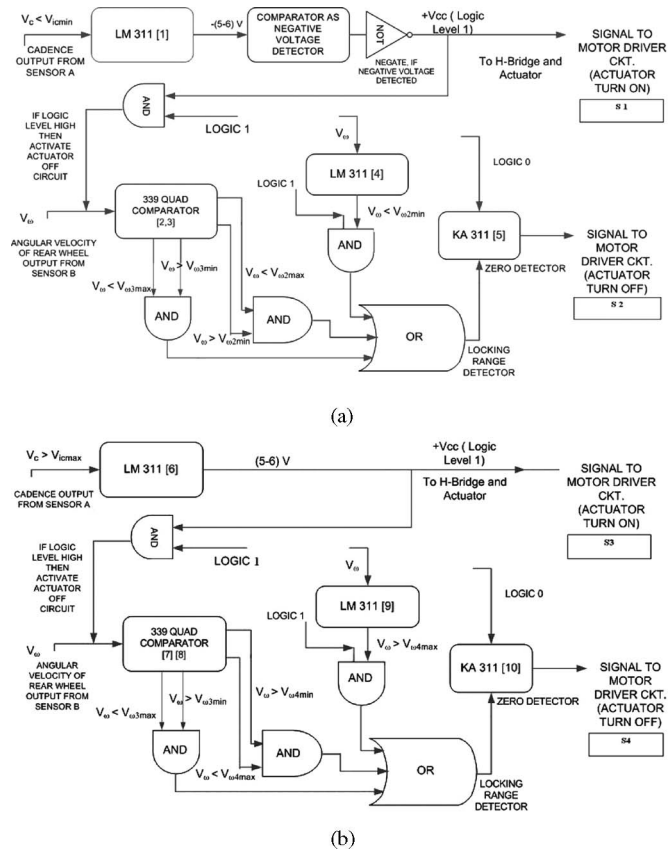

Fig. 4. (a) Module 1 of actuator driver circuit corresponding to downshifting of gear. (b) Module 2 of actuator driver circuit corresponding to upshifting of gear.

was required to boost the signals generated from the sensors. The LM311/KA311 comparator IC was used to compare the input voltage with the reference voltage (being provided by standard 0–15 V variable dc power supply). Depending upon the inverting or noninverting mode of operation, the IC outputs either logic level 1 or 0 that indicates whether the input voltage is greater than or lesser than the reference voltage. When the sensor output at the driving pedal (output at sensor A) crosses the cadence range, then the LM311/KA311 IC detects the direction of the break away (i.e., whether the cadence has exceeded or fallen below the range) and starts the actuator system. There are comparators (ICs), one each for checking whether the lower or upper cadence limit has been crossed. Thus, the actuator control circuit has two modules corresponding to the two possible directions of crossing the cadence range. Fig. 4(a) and (b) show the block diagrams of the two modules of the actuator control circuit. The actuator moves until the gear shifting is completed, which is indicated by

Authorized licensed use limited to: National Chung Cheng University. Downloaded on August 05,2021 at 05:53:20 UTC from IEEE Xplore. Restrictions apply.

TABLE III
REFERENCE VOLTAGE FOR COMPARATOR ICS

IC Designated Name in Block Diagram	Reference Voltage	Mode of Operation	Condition Checked
[1] Cadence Comparator	1.30 V	Non Inverting	V<1.30 V
[2] Quad Comparator	2.50 V	Inverting	V<2.30 V
[2] Quad Comparator	1.80 V	Non Inverting	V>1.80 V
[3] Quad Comparator	1.91 V	Inverting	V<3.10 V
[3] Quad Comparator	2.50 V	Non Inverting	V>2.30 V
[4] LM 311	3.10 V	Non Inverting	V<1.80 V
[6] Cadence Comparator	1.70 V	Non Inverting	V>1.70 V
[7] Quad Comparator	2.50 V	Inverting	V>2.30 V
[7] Quad Comparator	3.10 V	Non Inverting	V<3.10 V
[8] Quad Comparator	3.18 V	Inverting	V>3.18 V
[8] Quad Comparator	3.60 V	Non Inverting	V<3.60 V
[9] LM 311	3.60 V	Non Inverting	V>3.60 V

the sensor output of the rear wheel (output of sensor B) getting within a locking range. Both the modules of the control circuit perform the logical OR operation on the outputs from various comparators. The output of OR operation is used for checking whether the system has acquired locking range. If the output of logical OR operation is one, then a signal is generated to stop the actuator motion. However, if the output of logical OR operation is zero, the actuator continues to be in motion. The electronics circuit uses LM 311/KA 311 IC, 339 QUAD Comparator IC, 7408 AND Gate IC, 7404 NOT Gate IC, and 7432 OR Gate IC as structural elements. Various reference input voltages for the comparator IC are listed in Table III.

The outputs of both the modules of actuator control circuit are fed to the second section of ECU that has two blocks: control signal generation block and motor driver circuit block (after amplifying and conditioning the signals, if found necessary). The control signal generation block is shown in Fig. 5. The logic gate realization of this block shows that the control signals $S1$, $S2$, $S3$, and $S4$ produce motor driver circuit control signals: $I1$ and $I2$, respectively. The control signal generation values have also been tabulated in Table IV. The standard design of H-bridge motor driver circuit is used to drive the motor in the actuator. For this purpose two types of high-power transistors were used: 1) 2N3904 (NPN) and 2) 2N2907 A (PNP) having maximum current rating 15 A. The experimental results of H-bridge output are given in Table V.

C. Actuator

The basic gear shifting mechanism uses a standard derailleur mechanism. The derailleur mechanism used is similar to the gearbox mechanism in a motorized vehicle. It consists of four main components: 1) chain wheel and freewheel; 2) front and rear derailleur; 3) shift levers and cables; and 4) a chain. Normally, in a bicycle, riders change gears by moving shift levers that in turn affects the derailleur, which in turn guides the chain. As a result, the chain is engaged to the larger sprocket or drops to one of the smaller sprockets. Different combinations of teeth numbers on the chain wheel sprocket and the free wheel sprocket produce different gear ratios [14]. Therefore effectively, moving shift levers produces different gear ratios.

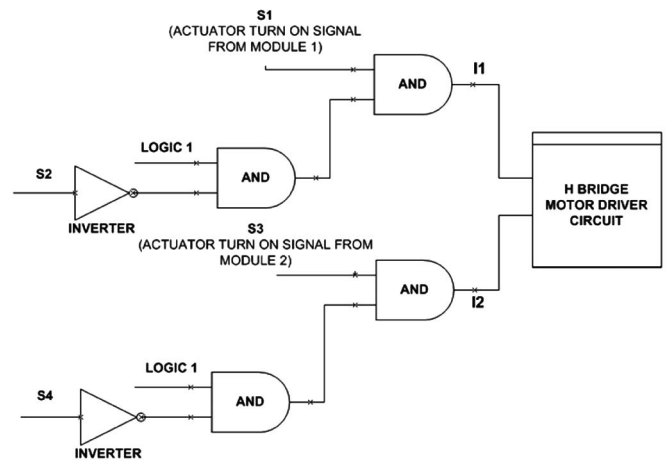

Fig. 5. Control signal generation block.

The gear-changing mechanisms used in modern bicycles usually consist of two or three gears (speeds) in their front derailleur systems and six to nine gears (speeds) in the rear derailleur systems. In the proposed system, a derailleur with five speeds or gears is used having the following specifications.

1) The average gear thickness is 1.09 mm.
2) The intergear distances are:
   gear pair 5-4: 5.72 mm;
   gear pair 4-3: 5.52 mm;
   gear pair 3-2: 4.96 mm.
3) The gear ratios (ratio of number of teeth in front sprocket to the number of teeth in rear sprocket) for different gear are:
   second gear: 1.83;
   third gear: 2.20;
   fourth gear: 2.75.

The actuator is designed to provide push and pull mechanism to derailleur like a linear actuator without involving any lever or wire. The movement of derailleur is caused by an actuator that consists of following components as shown in Fig. 6.

a) 12-V, 53 r/min dc motor with a static torque of 18 N·m and working torque of 5.4 N·m. Current requirement of the motor varies from 1.6 A with no load condition to 14 A in stalled condition (which is provided by standard 0–15 V variable dc power supply). The motor is fixed to the bicycle frame with the help of a mounting made of 5-mm-thick steel plates.
b) A square threaded power screw of length 150 mm and diameter of 20 mm. Shaft of the motor is riveted with the power screw with the help of a 32-mm diameter bush. Welding is avoided to reduce stress and misalignment.

Authorized licensed use limited to: National Chung Cheng University. Downloaded on August 05,2021 at 05:53:20 UTC from IEEE Xplore. Restrictions apply.

TABLE IV
CONTROL SIGNAL GENERATION VALUES FOR INPUT TO H-BRIDGE CIRCUIT

S1 (First Output Signal from Module 1 of Actuator Driver Circuit)	S2 (Second Output Signal from Module 1 of Actuator Driver Circuit)	S3 (First Output Signal from Module 2 of Actuator Driver Circuit)	S4 (Second Output Signal from Module 2 of Actuator Driver Circuit)	I1 (Output from Control generation Circuit and input to H-Bridge)	I2 (Output from Control generation Circuit and input to H-Bridge)
0	X (Don't care)	0	X (Don't care)	0	0
1	0	0	X (Don't care)	1	0
1	1	0	X (Don't care)	0	0
0	X (Don't care)	1	0	0	1
0	X (Don't care)	1	1	0	0

TABLE V
H-BRIDGE CIRCUIT INPUT AND OUTPUT VALUES

I1 (First Output Received From Control Signal Generation Circuit)	I2 (Second Output Received From Control Signal Generation Circuit)	Inp1 (Voltage At First Input Terminal of H Bridge Circuit)	Inp2 (Voltage At Second Input Terminal of H-Bridge Circuit)	Resultant Motion of Motor
0	0	0	0	Stop
0	1	0	VCC	Anti-clockwise (Vc>Vicmax)
1	0	VCC	0	Clockwise (Vc<Vicmin)
-	-	-	-	- (1-1 combination avoided as per the Proposed algorithm)

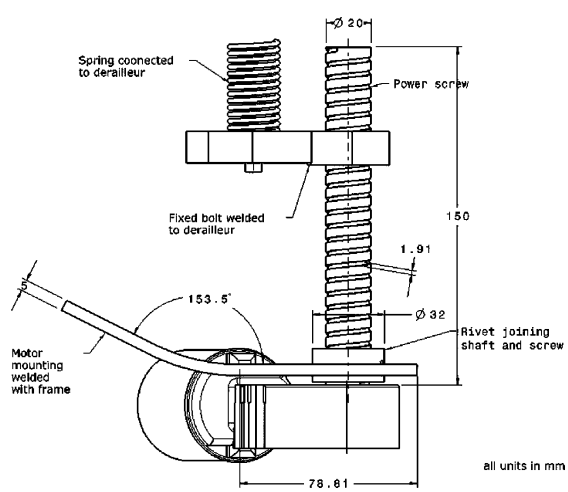

Fig. 6. Actual actuator and dimensions.

The motor shaft rotates one end of a screw (joined with shaft by help of a rivet), whose bolt is joined to the movable part of derailleur. The bolt moves backward or forward as the motor rotates anticlockwise or clockwise, respectively. The motion of bolt forces the derailleur to move along with it because it is welded to the bolt. The actuator gets locked, i.e., the motor stops rotating when the physical constraints of the motion are reached.

TABLE VI
LabVIEW SIMULATION RESULTS

S. No.	V_C (V)	V_ω (V)	Gear Shifted Direction After Transition	Motor Status	Gear No. After Transition
1	2.0167	2.4998 ($V_{\omega 1}$)	-	ON (Up shift)	-
2	1.1562	3.6261 ($V_{\omega 2}$)	-	ON (Downshift)	-
3	1.5657	3.2821 ($V_{\omega 1}$)	Up	OFF	4th
4	1.6665	3.6297 ($V_{\omega 1}$)	Up	OFF	5th
5	1.5818	1.7152 ($V_{\omega 2}$)	Down	OFF	1st
6	1.3352	2.2170 ($V_{\omega 2}$)	Down	OFF	2nd

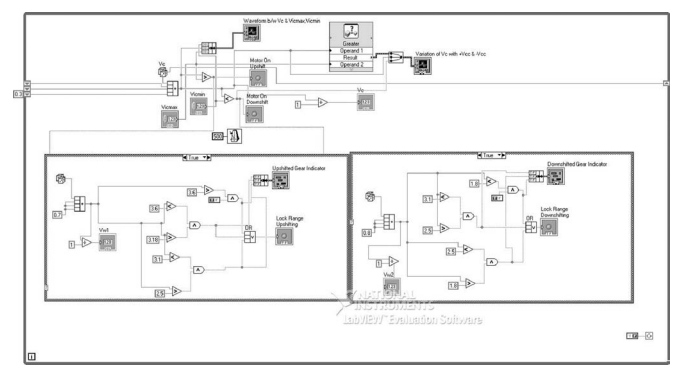

Fig. 7. Block diagram of ECU.

V. SIMULATION RESULTS AND OBSERVATIONS

The ECU designed for the system is simulated and tested on LabVIEW (see Table VI). It uses a graphical programming language, sometimes referred to as "G," to create programs called virtual instruments (VIs). Components are wired together to show the flow of data within the block diagram. The front panel is the user interface of the program; data is fed through controls and output data is observed through indicators (such as LEDs), graphs, and waveforms. Here, a VI (Virtual Instrumentation) file has been created. The schematic diagram of the proposed design is shown in Fig. 7. Different waveforms and observation results corresponding to different levels of cadence are obtained during the simulation. The simulation is designed to be totally dynamic in nature as the readings for voltage values in the actual prototype were found to be fluctuating rapidly. Considering the complexity of the waveforms and in order to make the

Authorized licensed use limited to: National Chung Cheng University. Downloaded on August 05,2021 at 05:53:20 UTC from IEEE Xplore. Restrictions apply.

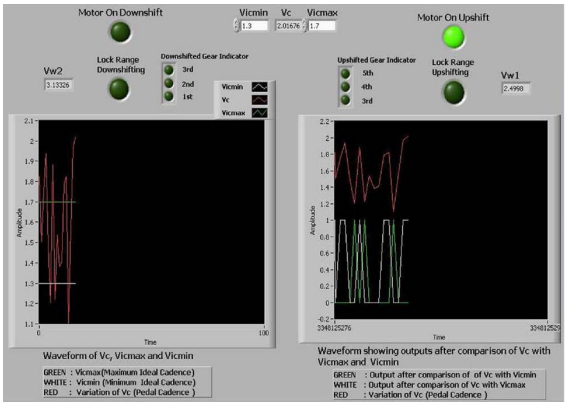

Fig. 8. "Motor on" control signal for upshifting.

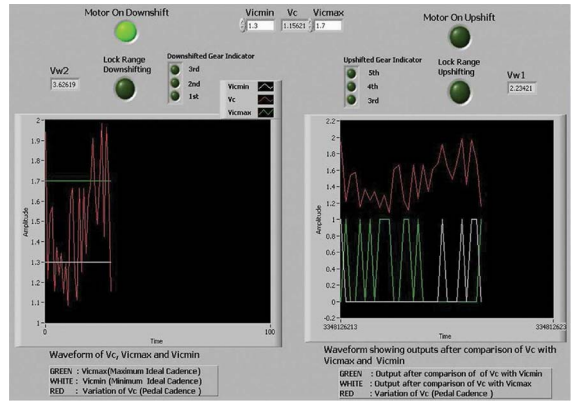

Fig. 9. "Motor on" control signal for downshifting.

simulation results clear and informative, the following style has been followed: two waveform windows have been shown—the first waveform shows the input cadence V_c and the fixed chosen values of V_{ICmax} and V_{ICmin}. Corresponding to the same waveform, the second waveform shows the results after comparison of instantaneous cadence V_c with V_{ICmax} and V_{ICmin}. Additionally, the waveforms have been supported with multiple conditional indicators in form of icons that glow based upon the results of comparison of instantaneous cadence V_c with V_{ICmax} and V_{ICmin}.

A. Verification of Control Signal

While simulating, the input voltage V_c (cadence) is assumed to be a random number lying in the approximate range of [0.9–1.9] V. This value is then passed on to a circuit, which checks whether V_c lies in the preferred cadence range [V_{ICmin}–V_{ICmax}] or not. If the value crosses the upper limit, it means that cyclist is pedaling too fast and the system needs to reduce the cadence. Consequently, a control signal is sent to start the motor in anticlockwise direction to cause an upshifting of gears. This condition is shown in Fig. 8 via a snapshot of the instance when cadence is found to be 2.01676 V. At this instant, the second waveform shows the comparison of the curve V_c with V_{ICmax} and V_{ICmin}, which results into logic levels 1 and 0, respectively. As a result, the direction of the breakaway of cadence range is detected, which activates the actuator in anticlockwise direction. Also, the "motor-on upshift" indicator glows signaling the same. The glowing of this indicator double checks the schematic and conforms to results shown in waveforms. The voltage V_ω corresponding to resultant angular velocity of rear wheel is also taken as a random number, such that its value is always greater than V_c. If the position of the gear before upshifting is known, a check is now performed comparing the randomly generated V_ω (value corresponding to shifted gear) with the predefined voltage ranges for each gear. The motor is sent a stopping signal if the value of V_ω lies between any of the given ranges for respective gears. When a signal called as "lock range upshifting" glows, it indicates that motor has been turned OFF, ensuring that gear upshift has successfully occurred. The current position of gear can be known by the value indicated by "upshifted gear indicator". Similar procedure is followed when V_c is detected below the minimum of preferred cadence range. The only difference being that now a downshifting is signaled by the control signal. This condition is shown in Fig. 9 via a snapshot of the instance when cadence is found to be 1.15621 V. At this instance, the second waveform shows that the compared output of the curve V_c corresponding to V_{ICmax} and V_{ICmin} reads logic level 0 and 1, respectively. Successfully, the direction of breakaway is detected so as to activate the actuator in clockwise direction. Also, the glowing of indicator "motor on downshift" signals the same. Again, the system performs the check for V_ω values in a separate module of control circuit with indicators "lock range downshifting" and "downshifted gear indicator".

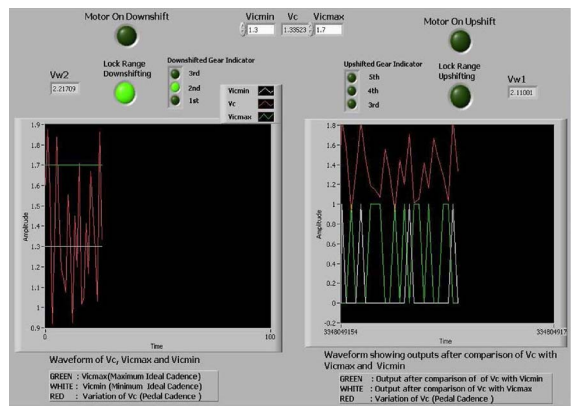

Fig. 10. Downshifting condition for second gear.

B. Verification of the Proposed Solution and ECU

The simulation waveforms and indicators reveal that the system works perfectly in achieving its target. Figs. 10 and 11 show waveforms at the instances when downshifting of gear occurs successfully. The instantaneous cadence V_c, just before this instance, falls below the lower range of 1.3 V, as it can be seen in the waveforms. Once the gear transition is completed, the driven wheel angular velocity is found to be 2.21709 and 1.71523, respectively. The gear transition settles for gears numbered second and first, respectively. Figs. 12 and 13 show waveforms at the instances when upshifting of gear occurs successfully. The instantaneous cadence V_c just before this instance, exceeds the

Authorized licensed use limited to: National Chung Cheng University. Downloaded on August 05,2021 at 05:53:20 UTC from IEEE Xplore. Restrictions apply.

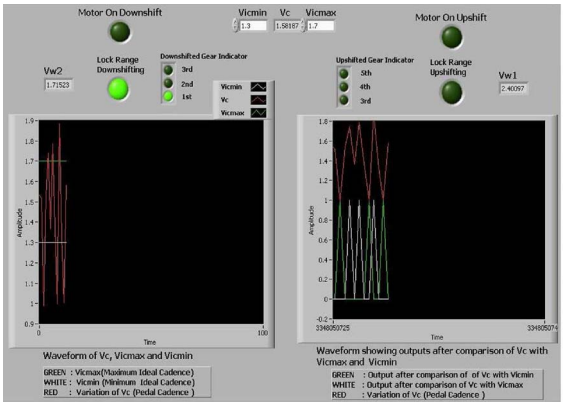

Fig. 11. Downshifting condition for first gear.

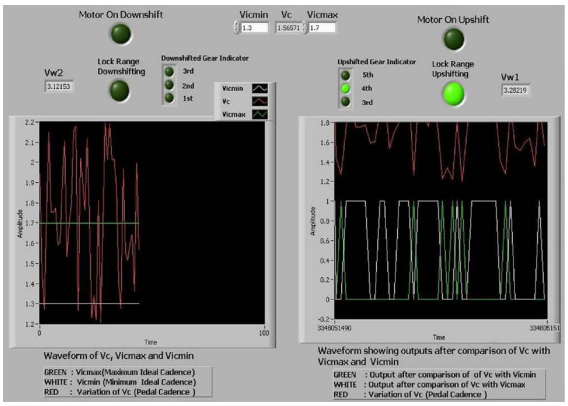

Fig. 12. Upshifting condition for fourth gear.

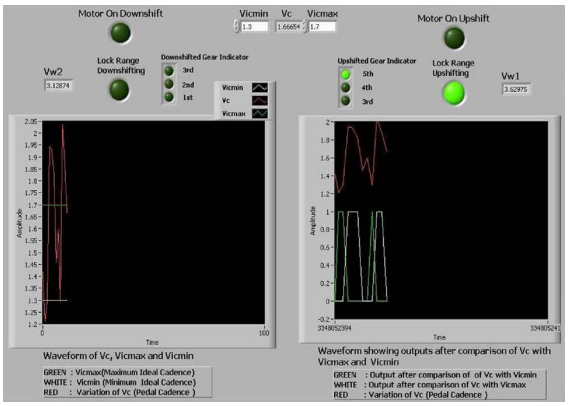

Fig. 13. Upshifting condition for fifth gear.

upper range of 1.7 V, as can be seen in the waveforms. Once the gear transition is completed, the driven wheel angular velocity is found to be 3.28219 and 3.62975, respectively. The gear transition settles for gears numbered fourth and fifth, respectively. The simulation results and values of V_c and V_ω gear shifting direction, motor status and shifted gear number have been tabulated in Table V.

VI. Concluding Remarks

The work shows that the intelligent bicycle transmission (IBT) system provides superior efficiency to bicycle riders, since it allows the rider to maintain the preferred cadence range. The system is very simple and economic yet provides an automatic gear shifting option to the cyclist at fairly accurate level. The system's performance can be enhanced many folds by using more precise sensor devices. A human interface can also be installed to provide the user with facility for manually setting the preferred cadence range. This interface can make the IBT system very flexible and suitable for any kind of bicycling and the power requirements can also be fulfilled by the pedaling action. With a few more inputs, the IBT system's efficiency, effectiveness can be increased multifold.

References

[1] D. L. Browning, "Method and system for computer controlled bicycle gear shifting," U.S. Patent 5261858, Nov. 16, 1993.

[2] S. Behbahani and C. W. de Silva, "Mechatronic design quotient as the basis of a new multicriteria mechtronic design methodology," *IEEE/ASME Trans. Mechatronics*, vol. 12, no. 2, pp. 227–232, Apr. 2007.

[3] W. J. Zhang, Q. Li, and L. S. Guo, "Integrated design of mechanical structure and control algorithm for a programmable four-bar linkage approach for mechatronic systems design," *IEEE/ASME Trans. Mechatronics*, vol. 4, no. 4, pp. 354–362, Dec. 1999.

[4] Q. Li, W. J. Zhang, and L. Chen, "Design for control–A concurrent engineering," *IEEE/ASME Trans. Mechatronics*, vol. 6, no. 2, pp. 161–169, Jun. 2001.

[5] P. R. Ouyang, Q. Li, W. J. Zhang, and S. L. Guo, "Design: Modeling and control of a hybrid machine system," *Mechatronics*, vol. 14, pp. 1197–1217, 2004.

[6] M. M. da Silva, W. Desmet, and H. Van Brussel, "Design of mechatronics system with configuration-dependent dynamics: Simulation and optimization," *IEEE/ASME Trans. Mechatronics*, vol. 13, no. 6, pp. 638–646, Dec. 2008.

[7] H. C. Chien and C. H. Tseng, "An automatic transmission for bicycles: A simulation," *Int. J. Ind. Ergonom.*, vol. 33, pp. 123–132, 2004.

[8] J. Forester, *Effective Cycling*. Cambridge, MA: MIT Press, 2001, pp. 50–70.

[9] J. R. Coast and H. G. Welch, "Linear increase in optimal pedal rate with increased power output in cycle ergometry," *Eur. J. Appl. Physiol.*, vol. 53, pp. 339–342, 1985.

[10] P. E. Di Prampero, "Cycling on earth, in space, on the moon," *Eur. J. Appl. Physiol.*, vol. 82, pp. 345–360, 2000.

[11] J. J. Seabury, W. C. Adams, and M. R. Ramey, "Influence of pedaling rate and power output on energy expenditure during bicycle ergometry," *Ergonomics*, vol. 20, pp. 491–498, 1977.

[12] R. R. Neptune, S. A. Kautzt, and M. L. Hull, "The effect of pedaling rate on coordination in cycling," *J. Biomech.*, vol. 30, no. 10, pp. 1051–1058, 1997.

[13] E. R. Bruke, *High-Tech Cycling*. Champaign, IL: Human Kinetics, 2003, pp. 101–107.

[14] T. Y. Lin, "Apply fuzzy logic to smart-bike controller design," in *Proc. IEEE Comput. Soc., Fourth Int. Symp. Uncertainty Model. Anal. (ISUMA 2003)*, pp. 208–212.

[15] S. Cetinkunt, *Mechatronics*. New York: Wiley, 2007.

Puneet Tandon received the B.Tech. degree in mechanical engineering from the National Institute of Technology, Kurukshetra, India, in 1988, and the M.Tech. degree in mechanical engineering, with specialization in computer-aided design and manufacturing, and the Ph.D. degree from the Indian Institute of Technology Kanpur, Kanpur, India, in 1995 and 2002, respectively.

He is currently a Professor of mechanical engineering and design programs at Pandit Dwarka Prasad Mishra Indian Institute of Information Technology, Design and Manufacturing, Jabalpur, India. His research interests include geometric modeling for design, engineering, and manufacturing, mechatronics, product design, development, etc.

Authorized licensed use limited to: National Chung Cheng University. Downloaded on August 05,2021 at 05:53:20 UTC from IEEE Xplore. Restrictions apply.

Arpit Awasthi received the B.Tech. degree in electronics and communication engineering from Pandit Dwarka Prasad Mishra Indian Institute of Information Technology, Design and Manufacturing, Jabalpur, India, in 2009.

He is currently a Product Design and Development Engineer in the embedded image and digital signal processing optimization domain at Hella KGaA Hueck and Company, Pune, India. His research interests include embedded image processing, intelligent driver assistant systems, digital electronics, and automation.

Bipin Kr. Mishra received the B.Tech. degree in electronics and communication engineering from Pandit Dwarka Prasad Mishra Indian Institute of Information Technology, Design and Manufacturing, Jabalpur, India, in 2009.

He is currently a Research Associate at the Indian Institute of Technology Kanpur, Kanpur, India. He is currently engaged on a Research Project (SPO/MHRD/R&D/20090066) supported by the Ministry of Human Resource Development, Government of India. His research Interests include digital image processing, mechatronics, embedded systems, virtual instrumentation, power systems, etc.

Pragam Rathore received the B.Tech. degree in mechanical engineering from Pandit Dwarka Prasad Mishra Indian Institute of Information Technology, Design and Manufacturing, Jabalpur, India, in 2009. He is currently working towards the M.Des. degree at the Indian Institute of Technology Kanpur, Kanpur, India.

His research interests include industrial design and design of embedded systems.

Ram Krishan Shukla received the B.Tech. degree in computer science and engineering from Pandit Dwarka Prasad Mishra (PDPM) Indian Institute of Information Technology, Design and Manufacturing (IITDM), Jabalpur, India, in 2009.

He is currently with PDPM, IITDM. His research interests include mechatronics, machine learning applications, and human–computer interaction.

Authorized licensed use limited to: National Chung Cheng University. Downloaded on August 05,2021 at 05:53:20 UTC from IEEE Xplore. Restrictions apply.