Transflash DEFINITION

PIN NO.	FUNCTION
1	DATA LINE(BIT 2)
2	CARD DETECT/DATA LINE(BIT 3)
3	COMMAND RESPONSE
4	SUPPLY VOLTAGE
5	CLOCK
6	SUPPLY VOLTAGE GROUND
7	DATA LINE(BIT 0)
8	DATA LINE(BIT 1)

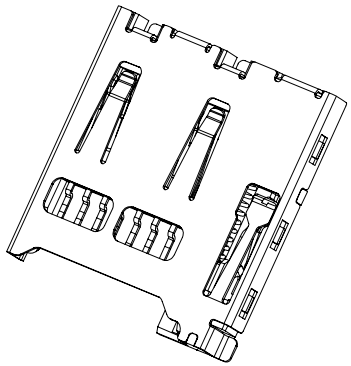

Notes:
1.All Dimensions are in Millimeters.
2.Material:
Housing:LCP Color:black
Contact:Phosphor Bronze.
Tin 160u" at Solder Tail,
Selectived Gold on Contact Area Plating.
3.Specification:
3.1.Electrical Characteristics:
3.1.0. Contact Resisitance: 100mΩ Max.
3.1.1. Dielectric Withstanding Voltage: 500VAC Max With i Minute
3.1.2. Insulation Resisitance:1000 MΩ Min.
3.1.3. Current Rating: 0.5A AC/DC Max.
Rated Valtage : 100 V RMS Min.
3.2.Mechanical Characteristics:
3.2.0. Mating Force: 13.8N Max.
3.2.1. Unmating Force : 13.8N Min.
3.2.2. Contact Retation Force: 100g Min. Per Pin.
3.2.3. Operating Temperature: −25°~+85°
3.2.4. Storage Temperature:−40°~+85°

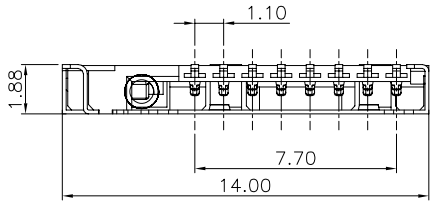

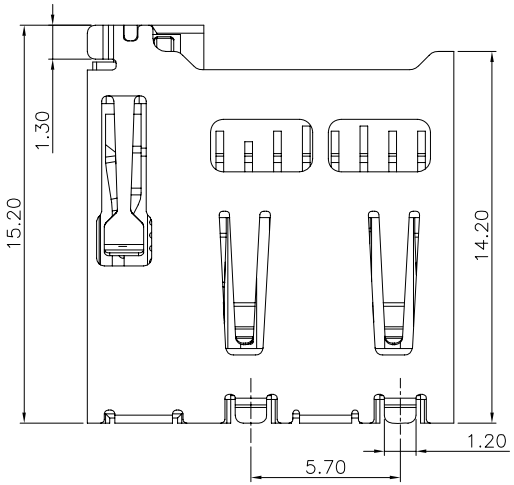

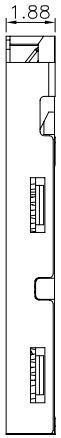

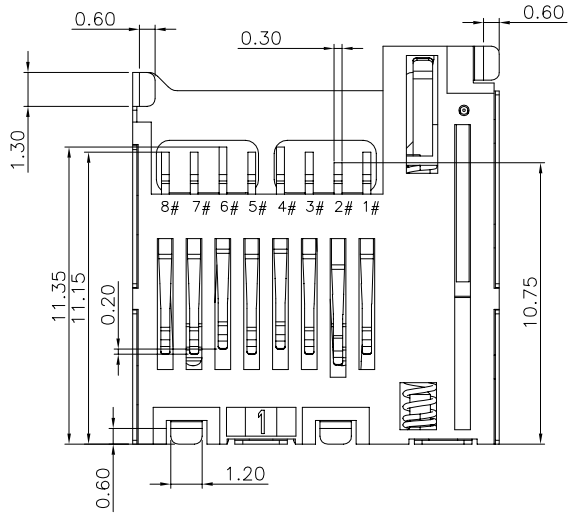

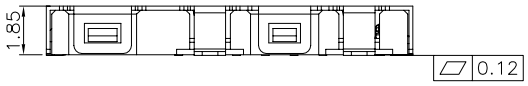

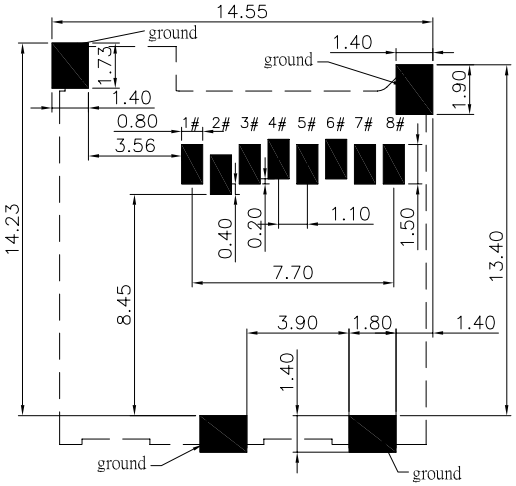

RECOMMANDED PCB LAYOUT
(ALL TOLERANCE IS 0.05)

Ordering Info.: B S 1 9 0 − 0 0 0 1 − 0 1
SERIES NO.
PACKING TYPE
1..... reel
INSULATOR COLOR
0..... black

EC NO: New Release		GENERAL TOLERANCES (UNLESS SPECIFIED)	SCALE N/A	DESIGN UNITS METRIC	WISE POWER TECH.CO.LTD
DRWN:		mm / INCH		THIRD ANGLE PROJECTION	TITLE
CH'KD:		4 PLACES ± --- / ± ---	DRAWN BY	DATE	Micro SD push to push connector 8pin
APPR:		3 PLACES ± --- / ± ---			
		2 PLACES ± 0.25 / ± ---	CHECKED BY	DATE	SYMBOLS MAJOR CRITICAL QUALITY ☒=0 ▨=0 REVISE ON CAD ONLY
		1 PLACE ± 0.38 / ± ---			
A	REV	ANGULAR ± 3 °	APPROVED BY	DATE 03/06/2006	PART NO. BS190−0001−01 / DOCUMENT NO. BS190−0001−01 / SHEET NO. 1 OF 1