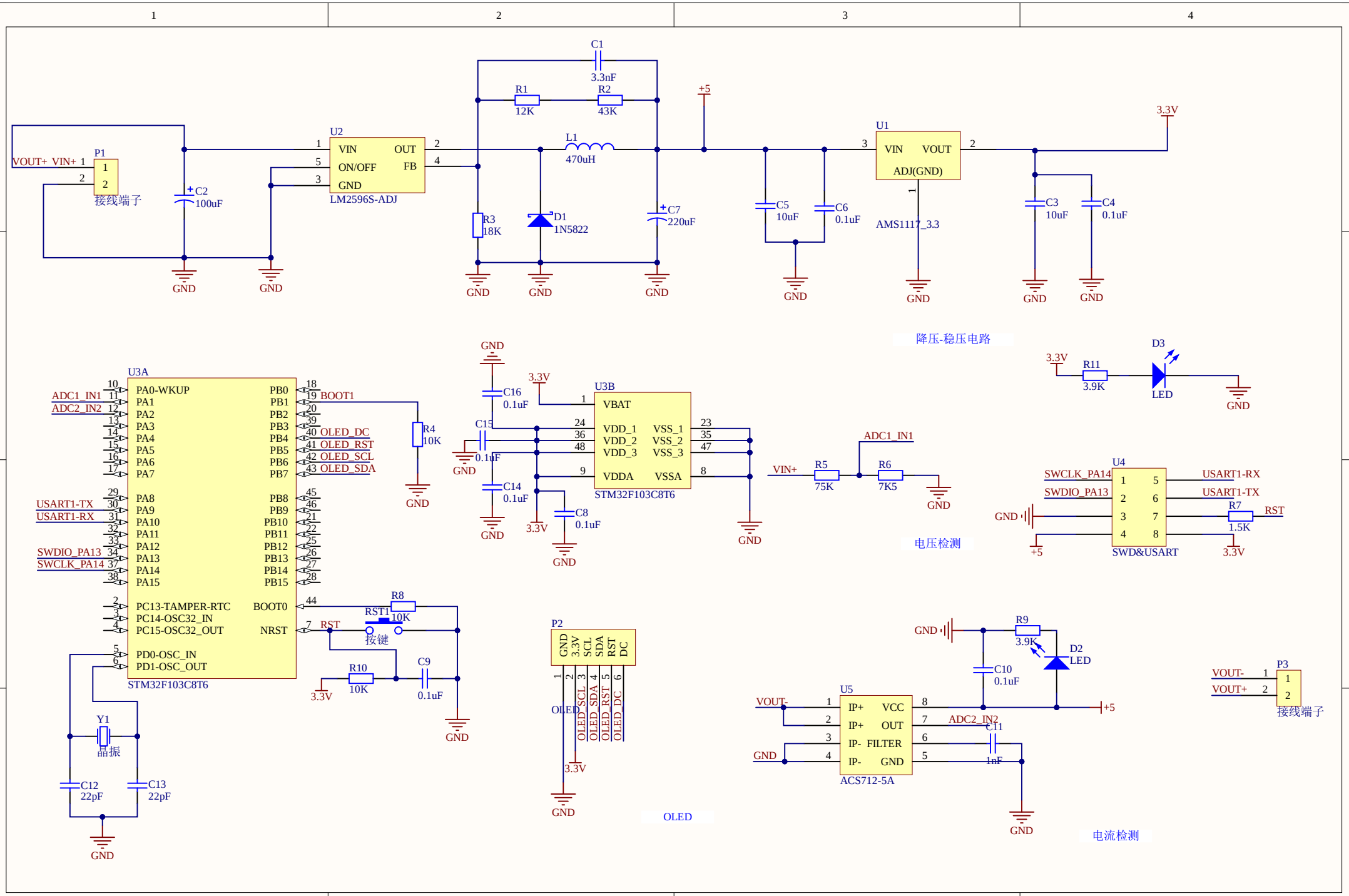
降压-稳压电路
电压检测
OLED
电流检测
U2
LM2596S-ADJ
U1
AMS1117_3.3
U3A
STM32F103C8T6
U3B
STM32F103C8T6
U4
SWD&USART
U5
ACS712-5A
P1
接线端子
P2
P3
接线端子
按键
晶振
VOUT+ VIN+
VOUT- VOUT+
ADC1_IN1
ADC2_IN2
USART1-TX
USART1-RX
SWDIO_PA13
SWCLK_PA14
OLED_DC
OLED_RST
OLED_SCL
OLED_SDA
BOOT1
RST
3.3V
+5
GND