Revis	Revision note	Date	Signature	Checked

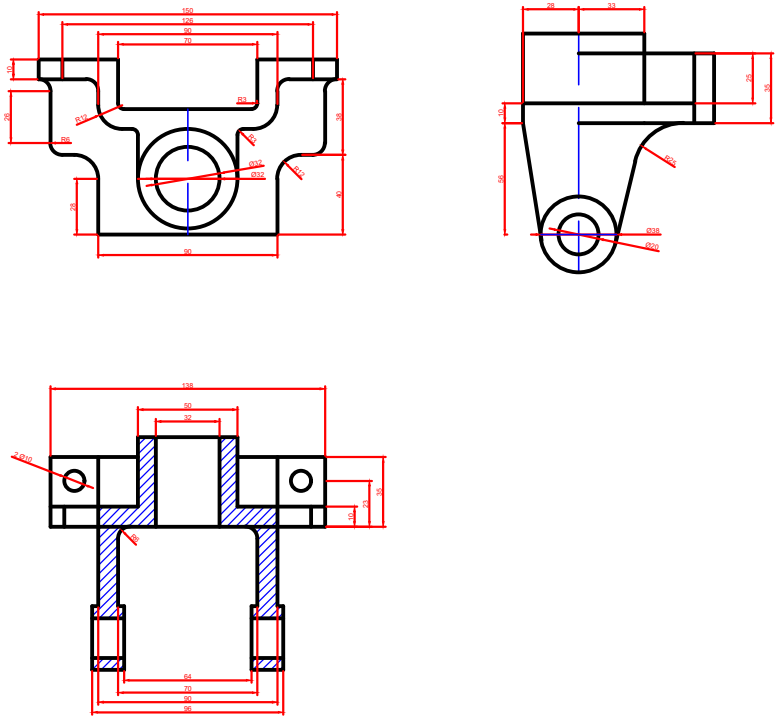

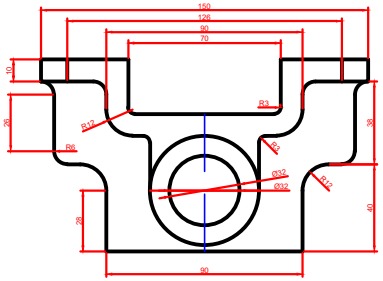

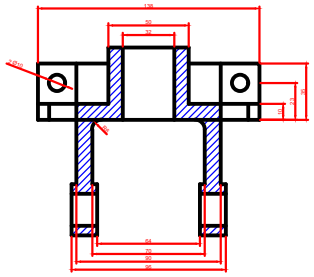

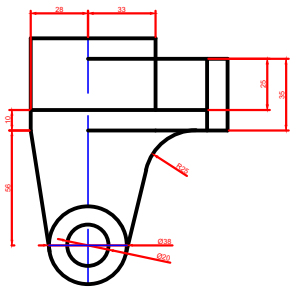

Insert	Quantity	Title/Item, designation, material, dimensions etc	Article No./Reference
Designed by ELSA LIMJU	Checked by	Approved by - date	Filename	Date 22/05/23	Scale

DETALI

Edition	Sheet 1/1