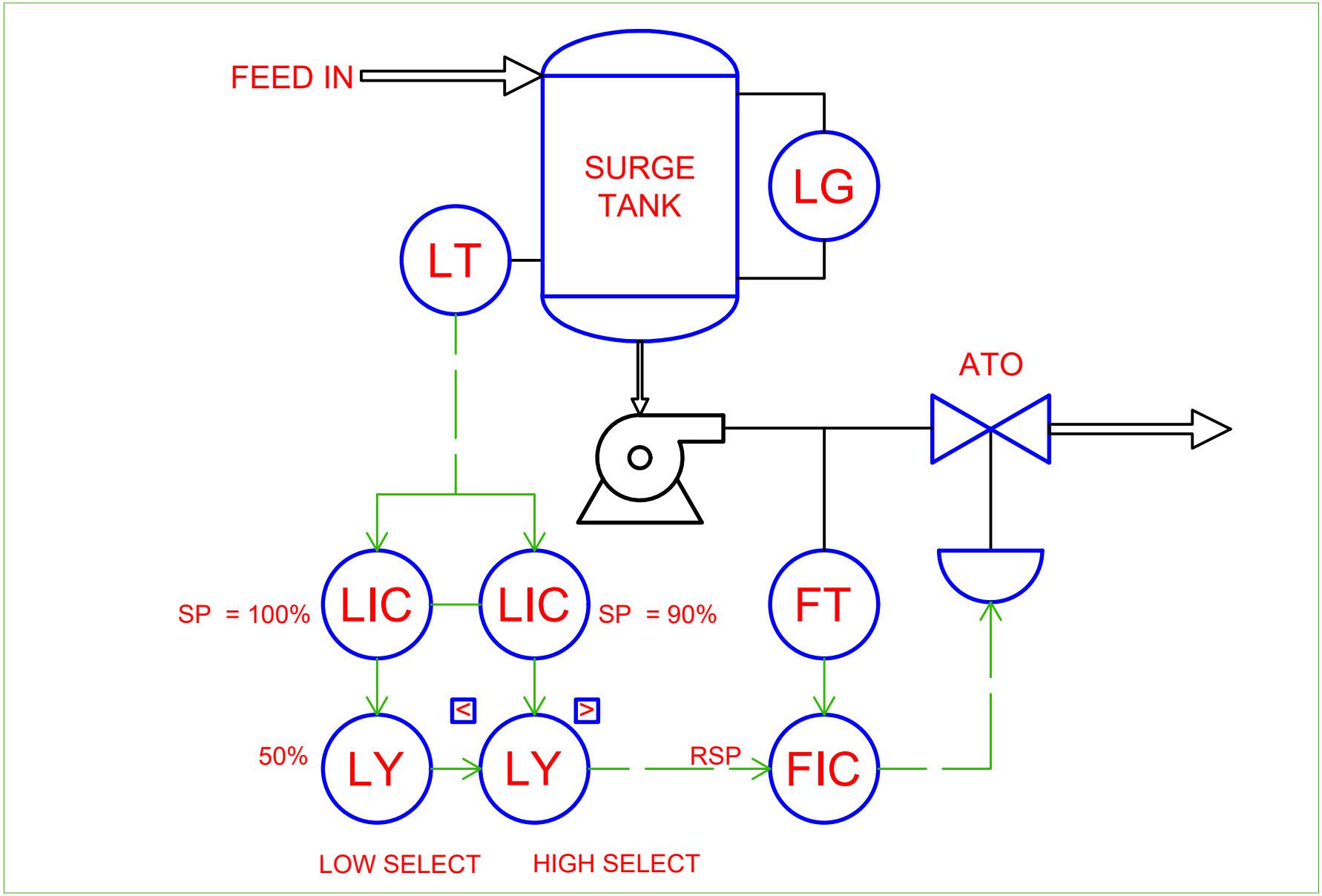

PIPING AND INSTRUMENTATION