| Revision | Revision note | Date | Signature | Checked |
|---|---|---|---|---|

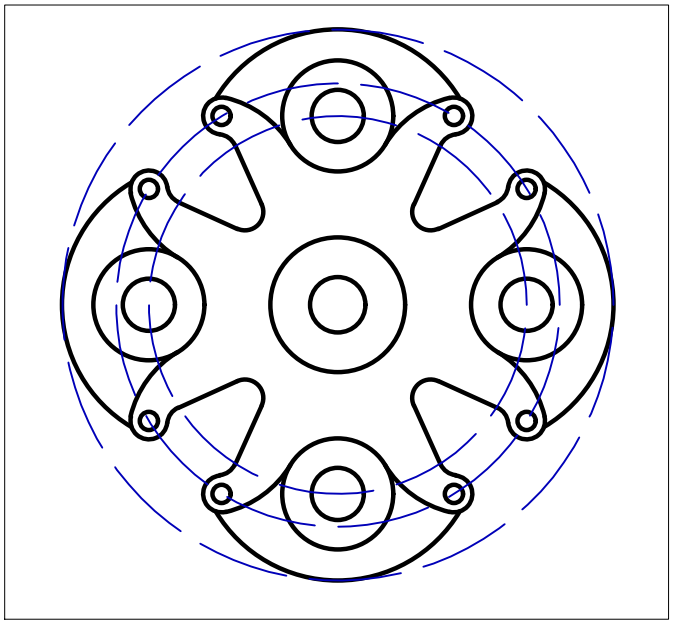

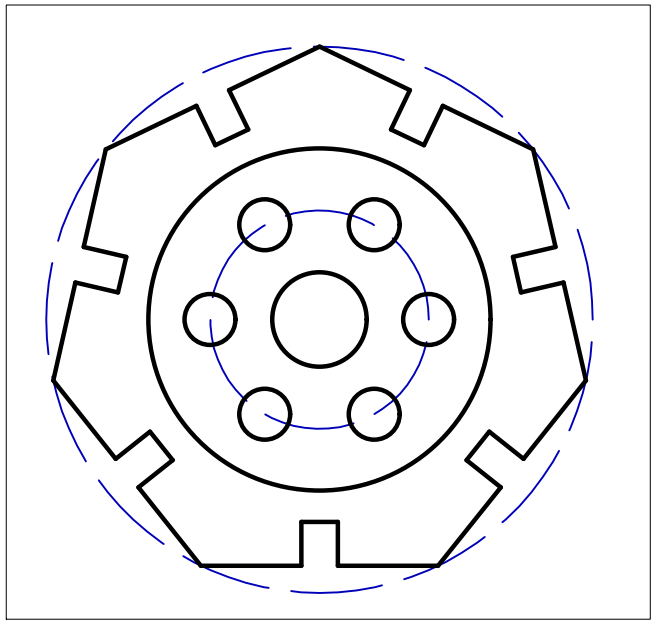

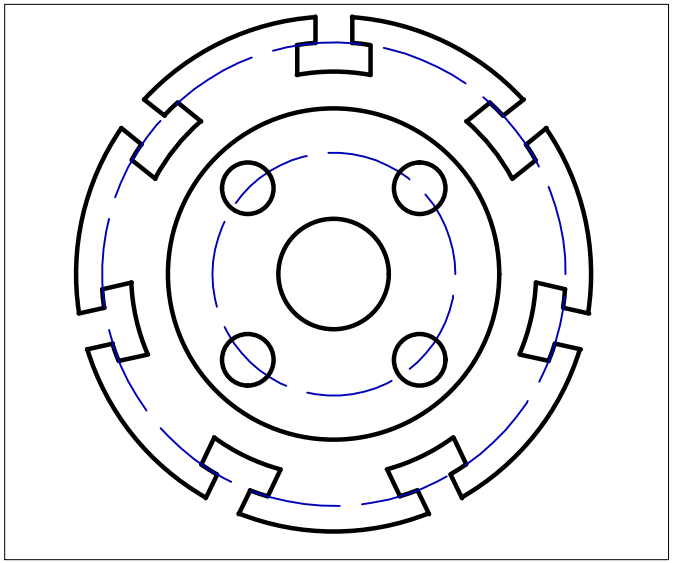

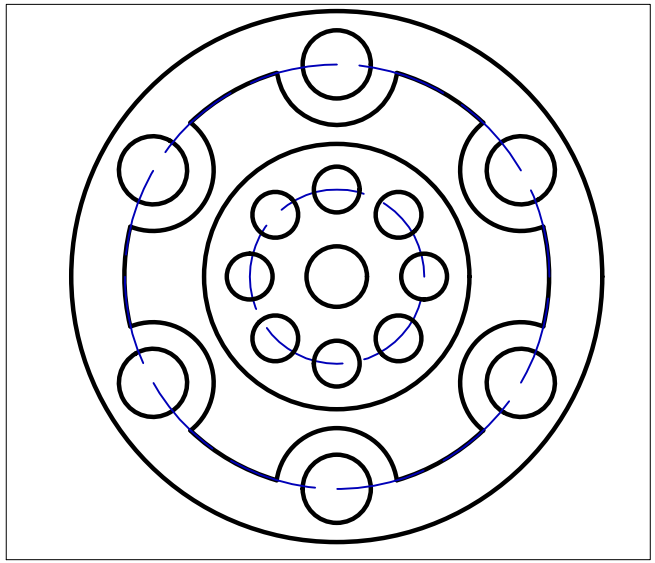

| Material | Quantity | Title/Name, designation, material, dimension etc | | | Article No./Reference |
|---|---|---|---|---|---|
| Designed by ELSA LIMJAJ | Checked by | Approved by – date | Filename DETALE MAKINËRISË/25 | Date | Scale 1:2 |
| | | | | Edition | Sheet 1/2 |