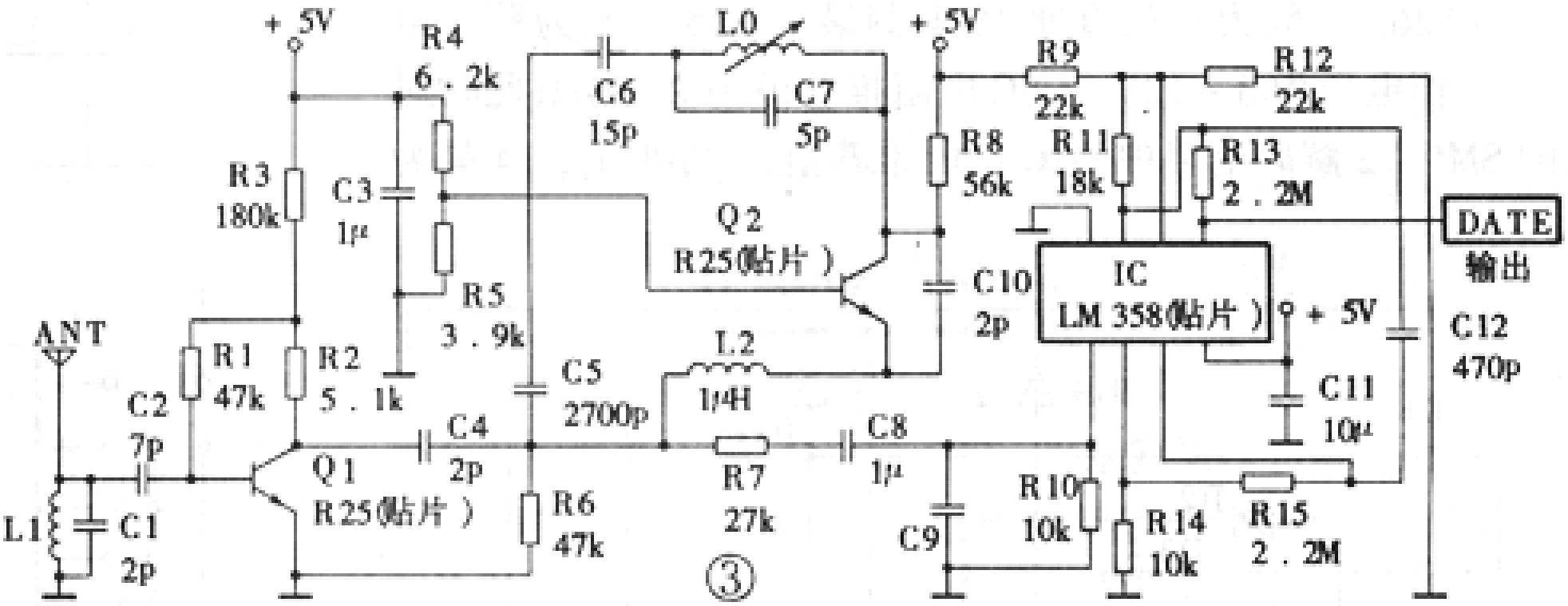MX-FS-03V schema: