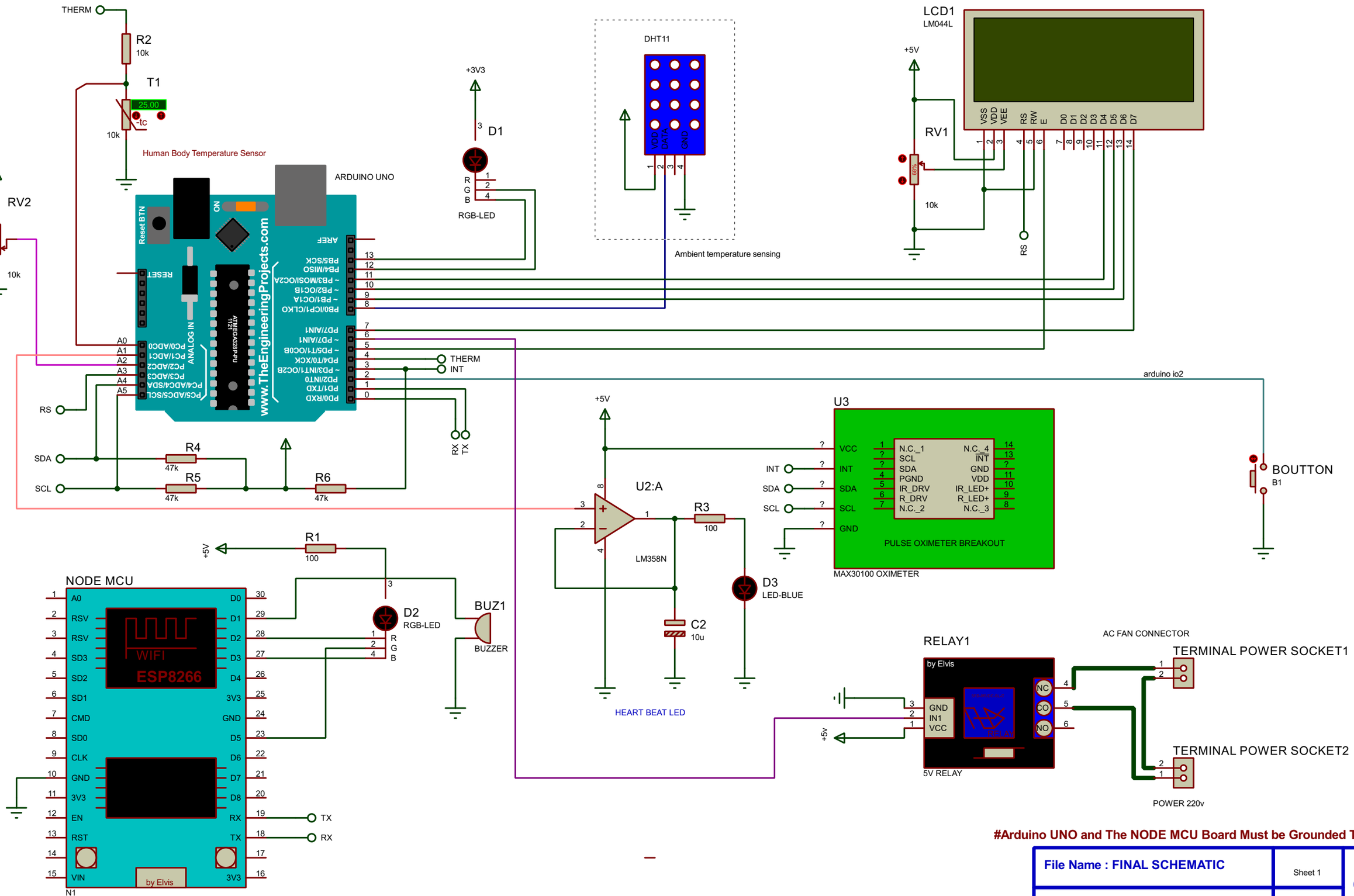

#Arduino UNO and The NODE MCU Board Must be Grounded Together

File Name : FINAL SCHEMATIC	Sheet 1	Date: 02/07/2021
Design Title: HEALTH CARE MONITOR	Author @Elvis	REV: @6